REV.	DESCRIPTION	INITIATOR	DATE
01	Product Release	LLL	09/11/2025

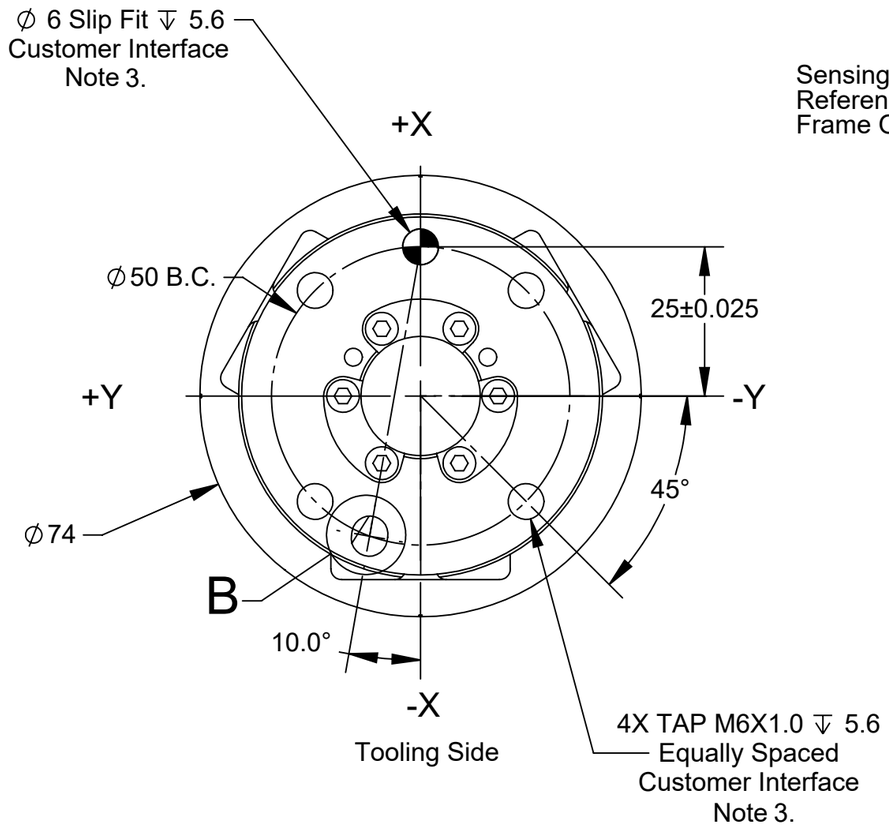

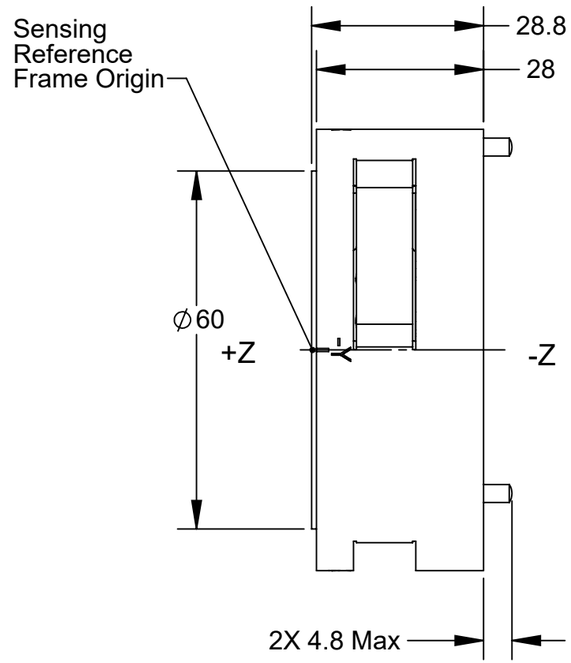

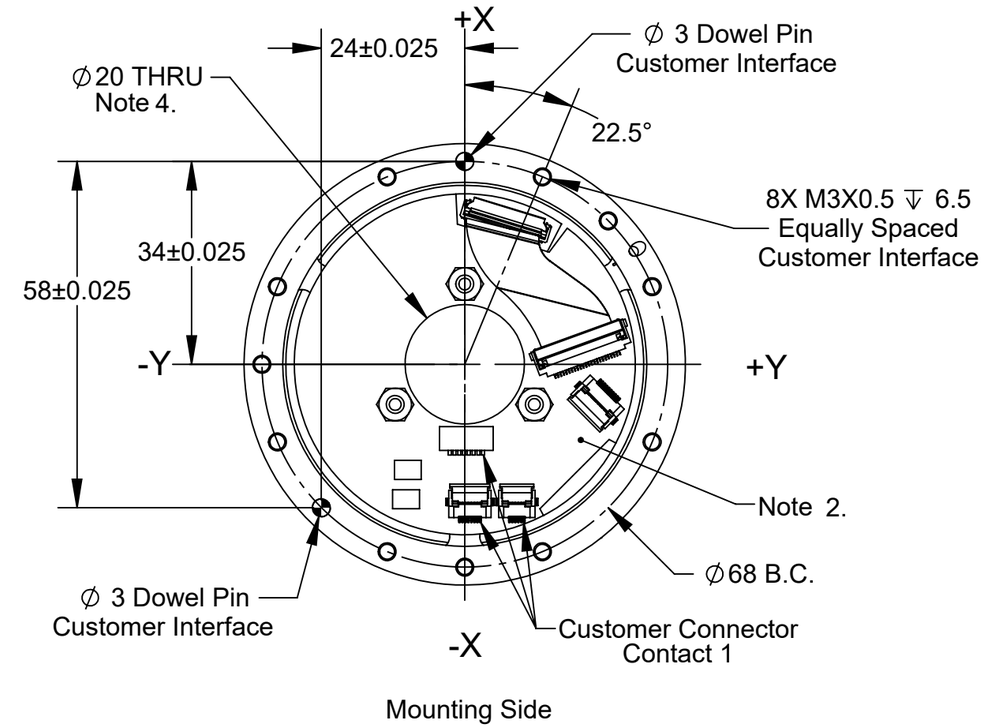

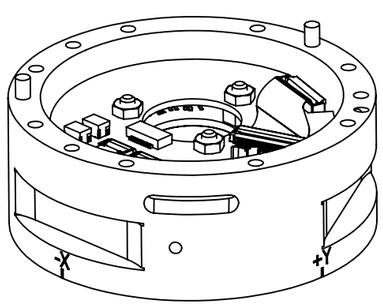

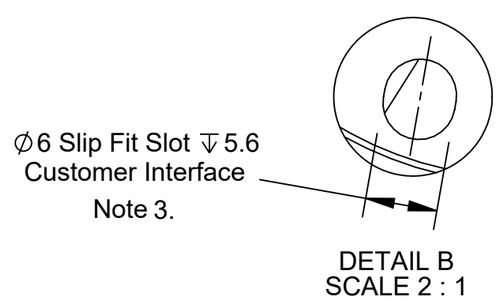

8P CONNECTOR PINOUT	
Pin	Signal
1	SL0_VP
2	RS485+
3	RS485-
4	TX0+
5	TX0-
6	RX0+
7	RX0-
8	SL0_GND

6P CONNECTOR PINOUT	
Pin	Signal
1	SL0_VP_FUSED
2	TX1+
3	TX1-
4	RX1+
5	RX1-
6	SL0_GND

Notes:
1. Material: Aluminum
2. WARNING: DO NOT CONTACT CIRCUIT BOARD OR GAGES. DAMAGE TO SENSOR MAY RESULT.
3. DO NOT EXCEED INTERFACE DEPTH, THIS MAY DAMAGE THE SENSOR.
4. Do not allow items passing through center hole to touch the through hole surfaces or accuracy will be compromised.
5. All non-toleranced dimensions are for reference only.

NOTES: UNLESS OTHERWISE SPECIFIED.

DO NOT SCALE DRAWING. ALL DIMENSIONS ARE IN MILLIMETERS.

3rd ANGLE PROJECTION

ATI INDUSTRIAL AUTOMATION

1031 Goodworth Drive, Apex, NC 27539, USA
Tel: +1.919.772.0115 www.ati-ia.com
Fax: +1.919.772.8259 ISO 9001 Registered Company

PROPERTY OF ATI INDUSTRIAL AUTOMATION, INC. NOT TO BE REPRODUCED IN ANY MANNER EXCEPT ON ORDER OR WITH PRIOR WRITTEN AUTHORIZATION OF ATI.

DRAWN BY: L. Larson 06/24/2025

CHECKED BY: T. Dean 08/27/2025

PROJECT # 240809-1 SHEET 1 OF 1

TITLE: SANO74-M12 Thru-Hole EtherCAT F/T Sensor

SCALE	SIZE	DRAWING NUMBER	REVISION
1:1	B	9630-05-0064	01