Table of Contents

B. Tool Changer **B-3**

QC-310 Series—Robotic Tool Changer **B-3**

1. Product Overview **B-3**

1.1 Master Plate Assembly **B-4**

1.2 Tool Plate Assembly **B-5**

1.3 Optional Modules **B-5**

2. Installation **B-6**

2.1 Master Interface **B-7**

2.2 Master Plate Installation **B-8**

2.3 Master Plate Removal **B-9**

2.4 Tool Interface **B-10**

2.5 Tool Plate Installation **B-11**

2.6 Tool Plate Removal **B-11**

2.7 Pneumatic Requirements **B-12**

.0.1 Valve Requirements for Air Adapter Modules B-12

2.8 Electrical Connections **B-13**

.0.2 PNP Type Lock, Unlock and RTL Sensors (-SM, -SMA, -SL, -SG, -ST sensor designations) B-13

.0.3 NPN Type Lock, Unlock and RTL Sensors (-SP, -SE sensor designations) B-13

.0.4 Namur Type Lock and Unlock Sensors (-SV sensor designation) B-14

3. Operation **B-15**

3.1 Conditions for Coupling **B-16**

3.2 Fail-Safe Operation **B-17**

3.3 Conditions for Uncoupling **B-18**

3.4 Tool Identification **B-18**

3.5 Tool Storage Considerations **B-19**

4. Maintenance **B-20**

4.1 Preventive Maintenance **B-20**

4.2 Cleaning and Lubrication of the Locking Mechanism and Alignment Pins **B-21**

4.3 Pin Block Inspection and Cleaning **B-23**

5. Troubleshooting and Service Procedures **B-24**

5.1 Troubleshooting Procedures **B-24**

5.2 Service Procedures B-25

.0.5 Sensor Replacement Procedures B-25

.0.5.1 Individual Lock and Unlock Sensor Assemblies Replacement B-26

.0.5.2 RTL Sensor Cable Replacement Procedure B-28

.0.5.3 RTL Sensor Replacement Procedure B-30

.0.6 V-ring Seal Replacement B-31

7.0.1 Alignment Pin Replacement B-32

6. Serviceable Parts B-34

6.1 Models 9121-310xM-0-0-0-0-S0 ..... B-34

6.2 Models 9121-310xM-0-0-0-0-SM, 9121-310xM-0-0-0-SP, 9121-310xM-0-0-0-0-SMA, 9121-310xM-0-0-0-0-ST, and 9121-310xM-0-0-0-0-SV B-35

6.3 Tool Plate B-36

7. Specifications B-37

8. Drawings B-38

B. Tool Changer

QC-310 Series—Robotic Tool Changer

1. Product Overview

ATI Tool Changers enhance the versatility of a robot by enabling the use of multiple customer tools, such as: grippers, vacuum cup tooling, pneumatic and electric motors, weld guns, and more.

The Tool Changer consists of a Master plate, which is attached to the robot arm, and a Tool plate, which is attached to customer tooling. When the robot picks up the customer tooling, a pneumatically-driven locking mechanism couples the two plates. The patented, fail-safe locking mechanism utilizes a multi-tapered cam with ball locking technology to ensure the Tool Changer does not uncouple if air pressure falls below 60 psi (4.1 bar) during operation.

The robot can be programmed to select the desired customer tooling by coupling the Master plate to the Tool plate. Electricity, fluid, and other forces of energy transfer to the customer tooling through optional modules that are attached to the Master and Tool plates. Refer to the ATI website for compatible modules or contact an ATI sales representative for more details.

For the most current product information and specifications on the QC-310 Series of Tool Changers, click the following link: *QC-310 Series*

1.1 Master Plate Assembly

The Master plate assembly includes the following features:

- An anodized aluminum body.
- A hardened stainless steel locking mechanism (a cam, male coupling, and chrome steel ball bearings).
- Hardened steel alignment pins that mate with bushings on the Tool plate.
- (4) flats for mounting optional modules. Flat A is dedicated for mounting an air adapter or a valve adapter and control/signal module combination. Flats B, C, and D are for optional modules.
- Proximity sensor assemblies used to verify the lock/unlock position of the piston and cam.
- Proximity sensors used to verify Tool plate presence when coupled.
- A mounting pattern for a robot arm or a robot interface plate.
- Routing channels for the RTL, Lock, and Unlock sensor cables.

Extreme pressure grease is applied to the cam, male coupling, ball bearings, and pins to enhance performance and maximize the life of the Master plate.

Figure 1.1—Master Plate Assembly

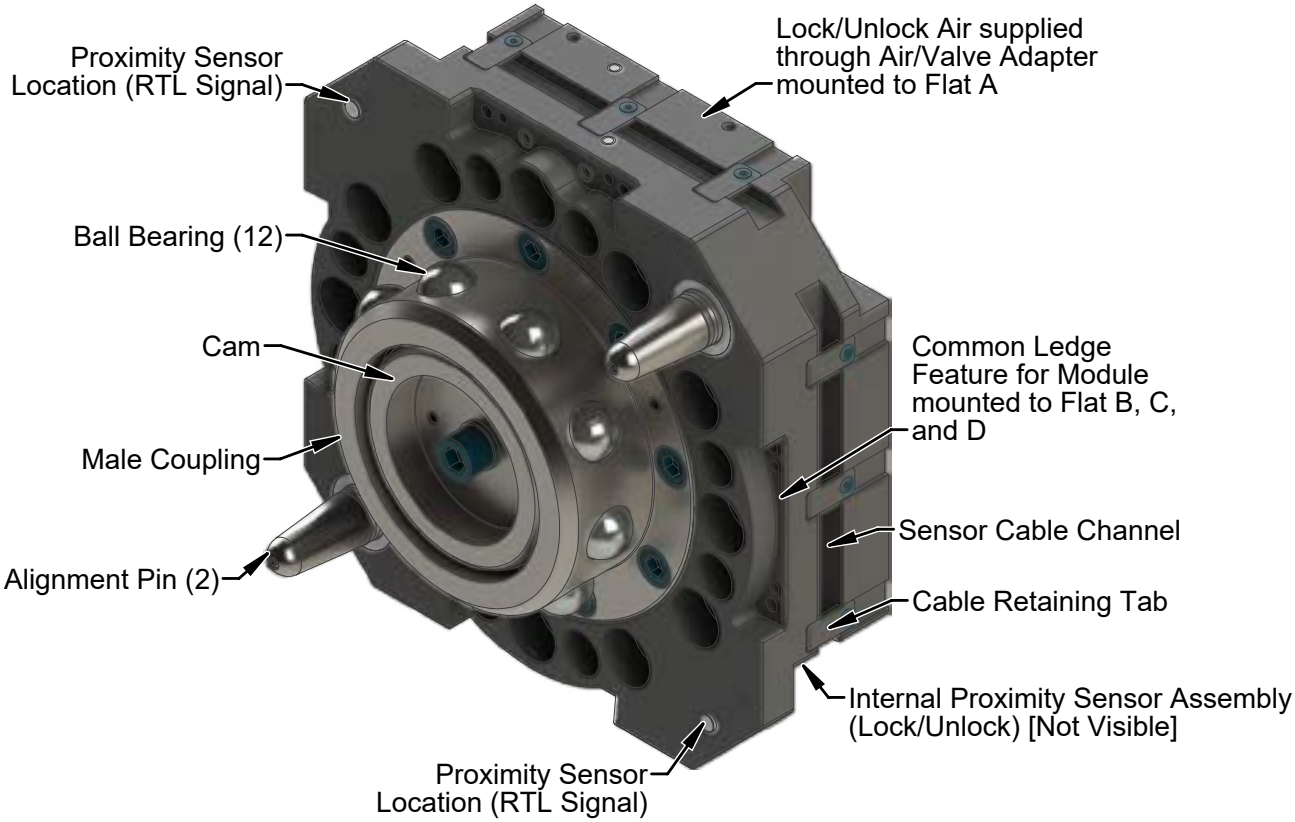

1.2 Tool Plate Assembly

The Tool plate assembly includes the following features:

- An anodized aluminum body.
- A hardened stainless steel bearing race.
- Alignment bushings that mate with pins on the Master plate.
- (4) flats for mounting optional modules. Flat A requires a tool adapter assembly that is compatible with the air or valve adapter used on the Master Plate. Flats B, C, and D are for optional modules.
- Ferrous metal proximity sensor targets.
- A mounting pattern for customer tooling or a tooling interface plate.

Figure 1.2—Tool Plate Assembly

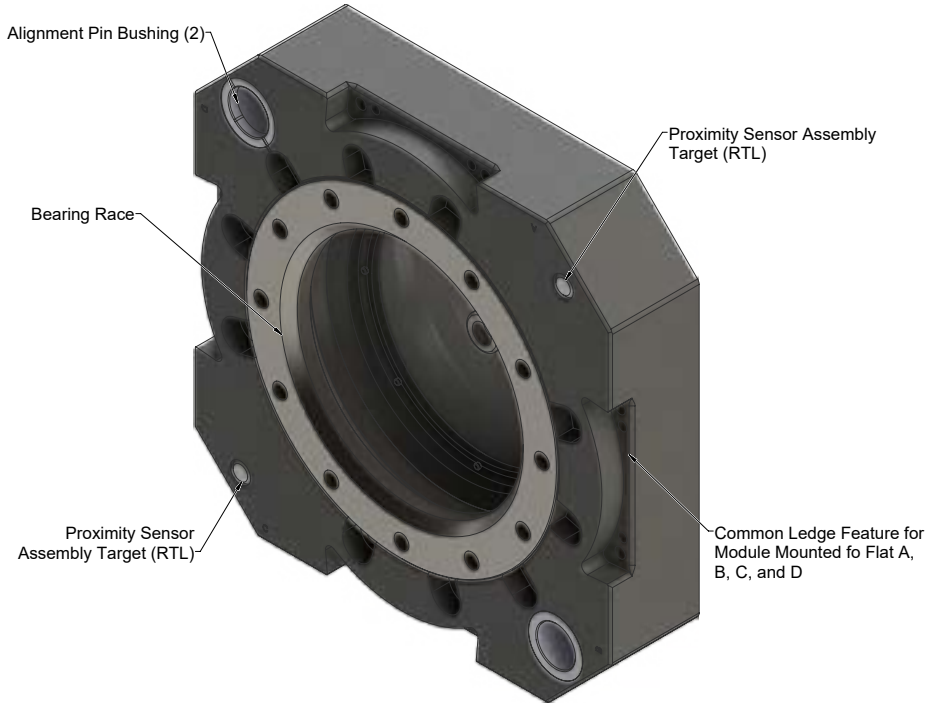

1.3 Optional Modules

The optional modules are mounted to the Master and Tool plate using a common ledge mounting feature and pass utilities to customer tooling.

For assistance in choosing the modules for your particular application, visit our website (*QC-310 Series*) to see what is available or contact an ATI sales representative directly.

2. Installation

Mounting the Tool Changer requires the following, refer to *Table 2.1*:

WARNING: Do not perform maintenance or repair(s) on the Tool Changer or modules unless the Tool is safely supported or placed in the tool stand, all energized circuits (e.g. electrical, air, water, etc.) are turned off, pressurized connections are purged and power is discharged from circuits in accordance with the customer specific safety practices and policies. Injury or equipment damage can occur with the Tool not placed and energized circuits on. Place the Tool in the tool stand, turn off and discharge all energized circuits, purge all pressurized connections, and verify all circuits are de-energized before performing maintenance or repair(s) on the Tool Changer or modules.

WARNING: Do not use lock washers under the head of the mounting fasteners or allow the mounting fasteners to protrude above the mating surfaces of the Master and Tool plates. Allowing fasteners to protrude above the mating surface will create a gap between the Master and Tool plates and not allow the locking mechanism to fully engage, this can cause damage to equipment or personal injury. The mounting fasteners must be flush or below the mating surfaces of the Master and Tool plates.

CAUTION: Thread locker applied to fasteners must not be used more than once. Fasteners might become loose and cause equipment damage. Always apply new thread locker when reusing fasteners.

CAUTION: Do not use fasteners that exceed the thread depth in the Tool Changer. Refer to *Section 8—Drawings* for details on mounting hole thread depth. Secure the Tool Changer with the proper length fasteners. This is true for both robot and tool interfaces.

Table 2.1—Fastener Size, Class, and Torque Specifications

Mounting Conditions	Fastener Size and Property Class	Recommended Torque
Master plate to Interface plate (6061-T6 aluminum) Minimum thread engagement of 0.71” (18 mm) [1.5X fastener Ø].	M12-1.75 Class 12.9	70 ft-lbs (95 Nm)
Master plate to Interface plate (6061-T6 aluminum) Minimum thread engagement of 0.94” (24 mm) [1.5X fastener Ø].	M16-2.0 Class 12.9	165 ft-lbs (225 Nm)
Master plate to Robot (steel; USS ≥ 90KSI) Minimum thread engagement of 0.47” (12 mm) [1.0X fastener Ø].	M12-1.75 Class 12.9	100 ft-lbs (135 Nm)
Master plate to Robot (steel; USS ≥ 90KSI) Minimum thread engagement of 0.63” (16 mm) [1.0X fastener Ø].	M16-2.0 Class 12.9	240 ft-lbs (325 Nm)
Tool Interface Plate (aluminum) to Tool plate (7075-T6 aluminum) Minimum thread engagement of 0.59” (15 mm) [1.5X fastener Ø]	M10-1.5 Class 12.9	38 ft-lbs (52 Nm)
Tool plate (6061-T6 aluminum) to Tool Interface Plate (aluminum) Minimum thread engagement of 0.59” (15 mm) [1.5X fastener Ø].	M10-1.5 Class 12.9	38 ft-lbs (52 Nm)
Tool plate (6061-T6 aluminum) to Tool Interface Plate (aluminum) Minimum thread engagement of 0.71” (18 mm) [1.5X fastener Ø].	M12-1.75 Class 12.9	70 ft-lbs (95 Nm)
Tool Interface Plate (aluminum) to Tool plate (7075-T6 aluminum) Minimum thread engagement of 0.94” (24 mm) [1.5X fastener Ø].	M16-2.0 Class 12.9	165 ft-lbs (225 Nm)

Notes:
1. Confirm available engagement with robot manufacturer
2. Removable (blue) Loctite 242® must be used on mounting fasteners.

2.1 Master Interface

The Master plate is typically attached to the robot arm. An interface plate can adapt the Master plate to a specific robot arm. Alignment features (dowel holes and bosses) accurately position and bolt holes secure the Master plate to the robot arm or an interface plate. Custom interface plates are available from ATI upon request. (refer to the drawings for technical information on mounting features.)

CAUTION: Do not use more than two alignment features when securing a Master plate to an interface plate. Using more than two alignment features can cause damage to equipment. Use either two dowel pins or a single dowel pin, along with a boss/recess feature to align the Master plate with the interface plate.

CAUTION: Do not use dowel pins that are too long or do not allow the interface plate and Master body to mate flush. Using dowel pins that are too long will cause a gap between the interface plate and Master body and damage the equipment. Use dowel pins that will not extend further than allowed by the Master body.

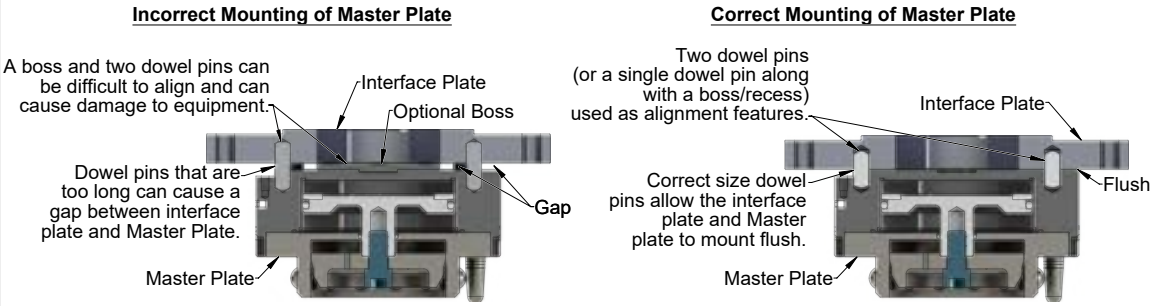

If the customer chooses to design and build an interface plate, consider the following points:

- The interface plate should include bolt holes for mounting and either two dowel pins or a dowel pin and a boss for accurate positioning on the robot and Master plate. The dowel and boss features prevent unwanted rotation. Refer to the robot manual for robot mounting features.
- The thickness of the interface plate must be sufficient to provide the necessary thread engagement for the mounting bolts.
- Dowel pins must not extend out from the surface of the interface plate farther than the depth of the dowel holes in the Master plate.
- If a boss is used on the Master plate, a recess of proper depth and diameter must be machined into the interface plate to correspond with the boss on the Master plate.
- Mounting bolts that are too long can create a gap between the interface plate and the Master plate, which can damage equipment.
- The interface plate must provide rigid mounting to the Master plate.
- The interface plate design must account for clearances required for Tool Changer module attachments and accessories.

2.2 Master Plate Installation

Tools required: *10 mm or 12 mm hex key, torque wrench*

Supplies required: *Clean rag, Loctite® 242*

1. Clean the mounting surfaces.
2. If required, install the interface plate to the robot arm, align using the boss or dowel pins and secure with customer supplied fasteners.
3. Align the dowel pins to the corresponding holes in the Master plate and secure the Master plate to the robot arm or interface plate with customer supplied fasteners.
4. For first time installation of fasteners with pre-applied adhesive no additional Loctite is required. If fasteners are being reused, apply Loctite to threads (see *Table 2.1* for fastener specifications).

NOTICE: If an ATI interface plate is used, fasteners to mount the Master plate are supplied with the interface plate.

5. Connect utilities to the appropriate module and Master plate connections. For pneumatic lock and unlock connection, refer to *Section 2.7—Pneumatic Requirements.*
6. Safely resume normal operation.

Figure 2.1—Typical Master Plate Installation

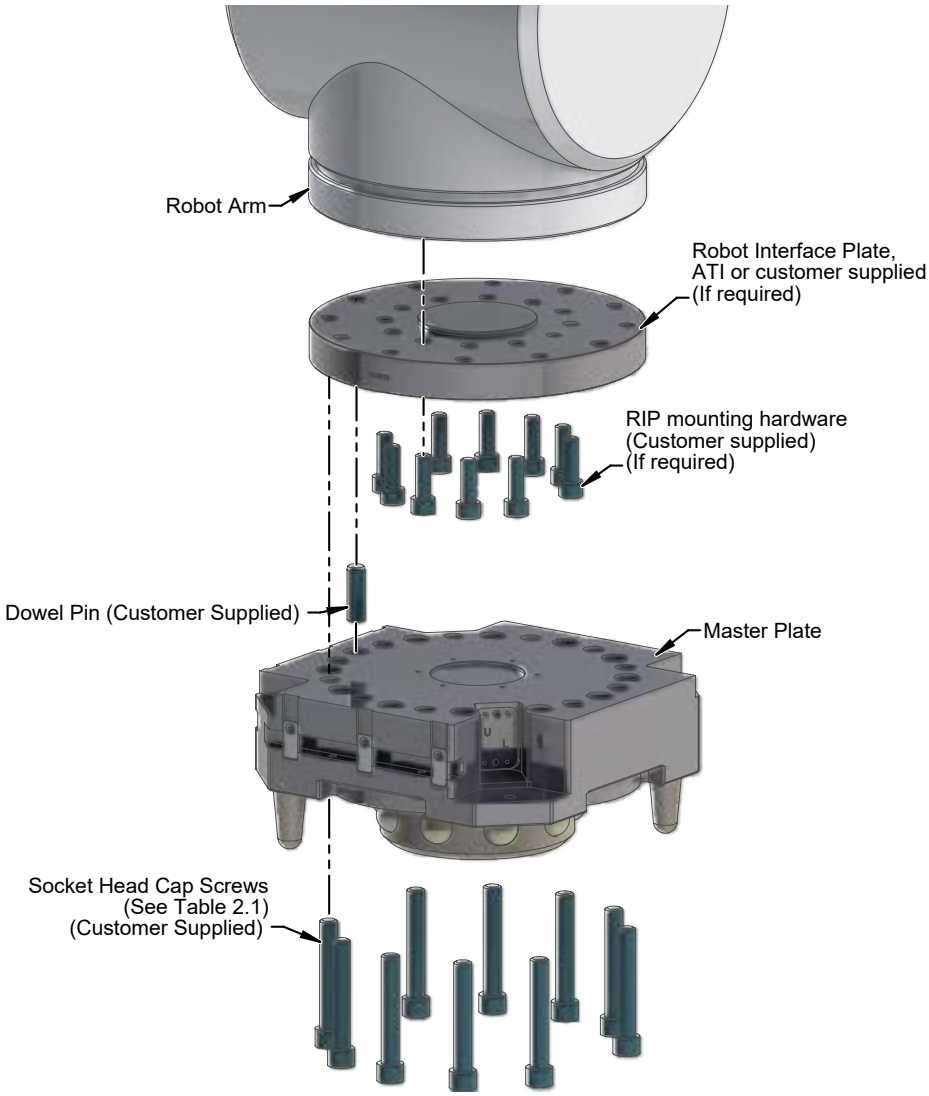

2.3 Master Plate Removal

Refer to *Figure 2.1*.

Tools required: *10 mm or 12 mm hex key*

1. Place the Tool in a secure location.
2. Uncouple the Master and Tool plates.
3. Turn off and de-energize all energized circuits (e.g. electrical, air, water, etc.).
4. Disconnect all utilities (e.g. electrical, air, water, etc.).

NOTICE: Support the Master plate while removing the fasteners.

5. Remove the socket head cap screws connecting the Master plate to the robot arm or interface plate.

2.4 Tool Interface

The Tool plate is attached to the customer's tooling. An interface plate can adapt the Tool plate to customer tooling. Alignment features (dowel holes and a recess) accurately position and bolt holes to secure the Tool plate to customer tooling. Custom interface plates can be supplied by ATI (refer to the application drawing).

CAUTION: Do not use more than two alignment features when securing a Tool plate to an interface plate. Using more than two alignment features can cause damage to equipment. Use either two dowel pins or a single dowel pin, along with a boss/recess feature to align the Tool plate with the interface plate.

CAUTION: Do not use dowel pins that are too long or do not allow the interface plate and Tool body to mate flush. Using dowel pins that are too long will cause a gap between the interface plate and Tool body and damage the equipment. Use dowel pins that will not extend further than allowed by the Tool body.

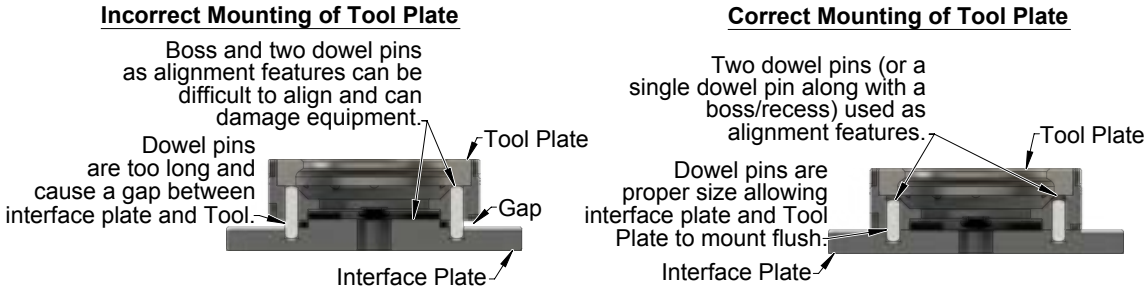

If the customer chooses to design and build a tool interface plate, consider the following points:

- The interface plate should include bolt holes for mounting and either two dowel pins or a dowel pin and a boss for accurate positioning on the customer tooling and Tool plate. The dowel and boss features prevent unwanted rotation.
- Dowel pins must not extend out from the surface of the interface plate farther than the depth of the dowel holes in the Tool plate.
- The thickness of the interface plate must be sufficient to provide the necessary thread engagement for the mounting bolts. Fasteners should meet minimum recommended engagement lengths while not exceeding the maximum available thread depth. Use of bolts that are too long can cause damage to the tool side changer.
- The plate design must account for clearances required for Tool Changer module attachments and accessories.
- If a boss is to be used on the interface plate, a boss of proper height and diameter must be machined into the interface plate to correspond with the recess in the Tool plate.
- The interface plate must have a hole in its center for manually returning the locking mechanism to the unlocked position under adverse conditions (i.e. unintended loss of power and/or air pressure). The center access hole with a minimum diameter of 1" (25.4 mm) prevents debris from contaminating the locking mechanism.
- Optional cover plate available for harsh environments or where application exposes locking mechanism to debris

2.5 Tool Plate Installation

Tools required: *8 mm, 10 mm, or 12 mm hex key, toque wrench*

Supplies required: *Clean rag, Loctite 242*

1. Clean the mounting surfaces.
2. If required, install the tool interface plate to the customer tooling, align using the boss or dowel pins and secure with customer supplied fasteners.
3. Align the dowel pins to the corresponding holes in the Tool plate and secure the Tool plate to the tool interface plate or customer tooling with customer supplied fasteners.
4. For first time installation of fasteners with pre-applied adhesive no additional Loctite is required. If fasteners are being reused, apply Loctite to threads (see *Table 2.1* for fastener specifications).

NOTICE: If an ATI interface plate is used, fasteners to mount the Tool plate is supplied with the interface plate.

5. Connect utilities to the appropriate module and Tool plate connections.
6. Safely resume normal operation.

Figure 2.2—Standard Tool Plate Installation

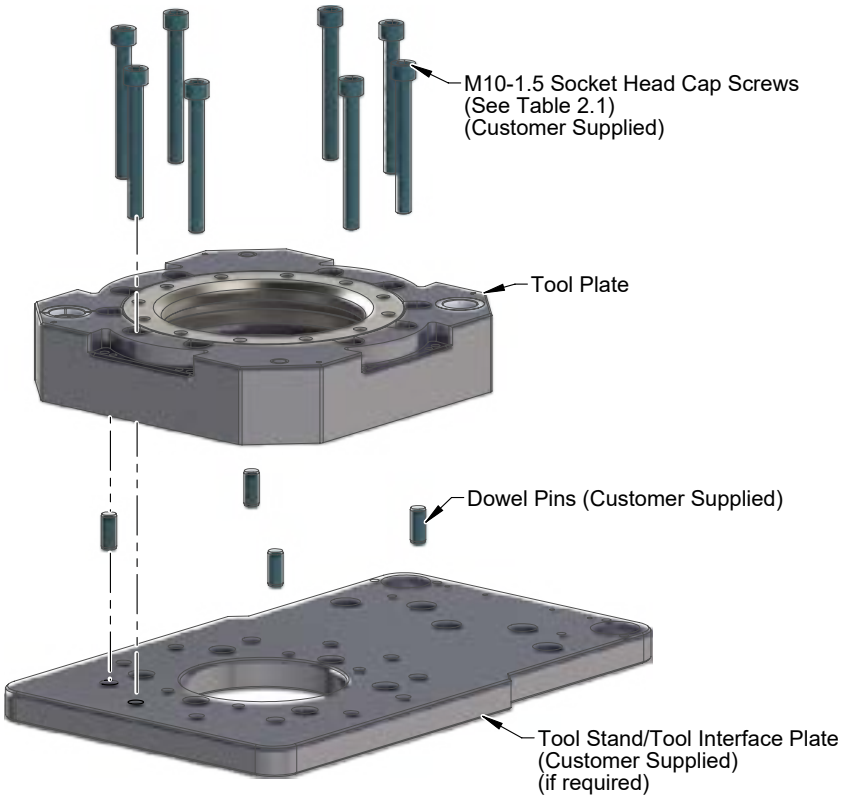

2.6 Tool Plate Removal

Tools required: *8 mm, 10 mm, or 12 mm hex key*

1. Place the Tool in a secure location.
2. Uncouple the Master and Tool plates.
3. Turn off and de-energize all energized circuits (e.g. electrical, air, water, etc.).
4. Disconnect all utilities (e.g. electrical, air, water, etc.).
5. Remove the socket head cap screws connecting the Tool plate to the tooling or tool interface plate.

2.7 Pneumatic Requirements

Proper operation of the locking mechanism requires a constant supply of clean, dry, non-lubricated air, with the following conditions:

- Pressure range of 60 to 100 psi (4.1 - 6.9 bar) Suggested 80 psi.
- Filtered minimum: 40 microns.

To lock or unlock the Tool Changer, a constant supply of compressed air is required. If there is a loss of air pressure in the locked state, the cam profile prevents the master plate and tool plate from unlocking, and the Tool Changer goes into the fail-safe condition.

CAUTION: Do not use the Tool Changer in a fail-safe condition. Damage to the locking mechanism can occur. Re-establish air pressure and ensure the Tool Changer is in a secure lock position before returning to normal operations.

.0.1 Valve Requirements for Air Adapter Modules

NOTICE: No valve is required when using a valve adapter module. The valve adapter module has an integrated solenoid valve and only requires the customer to supply a single air source to the valve adapter.

A customer supplied 2-position 4-way or 5-way valve with either 4-port or 5-port configuration must be used to actuate the locking mechanism in the Master plate. It is imperative that when air is supplied to the Lock or Unlock Port on the Master plate, that the opposite port be vented to atmosphere (i.e., when air is supplied to the Lock Port, the Unlock Port must be open to the atmosphere.) Failure to vent trapped air or vacuum on the inactive port may inhibit operation of the locking mechanism and prevent coupling or uncoupling.

CAUTION: The locking mechanism will not function properly when connected to a 3-way valve as this type of valve is incapable of venting trapped air or vacuum from within the Tool Changer. This could result in damage to the product, attached tooling, or injury to personnel. Connect the Lock and Unlock supply air to a 2-position 4-way or 5-way valve with either 4-port or 5-port configuration.

Figure 2.3—Lock and Unlock Pneumatic Connections

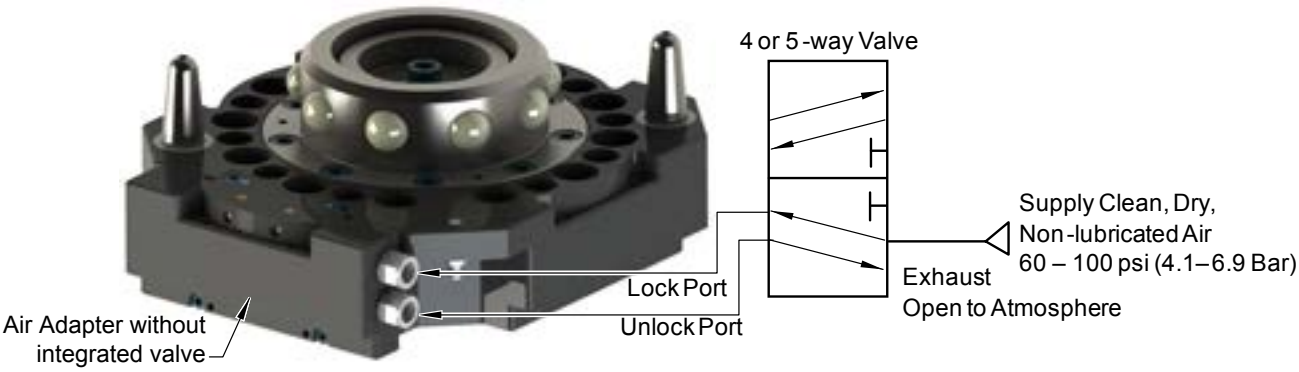

2.8 Electrical Connections

The Tool Changer is available with integrated lock/unlock sensors. If sensors are not used, plugs are provided to seal the locking mechanism. If a control/signal module is to be utilized on flat 'A' when ordered, the sensors will be connected to the module prior to shipping.

.0.2 PNP Type Lock, Unlock and RTL Sensors (-SM, -SMA, -SL, -SG, -ST sensor designations)

These sensors are used on 9121-310xM-0-0-0-0-SM, 9121-310xM-0-0-0-0-SMA, 9121-310xM-0-0-0-0-SL, 9121-310xM-0-0-0-0-SG, and 9121-310xM-0-0-0-0-ST.

Table 2.2—PNP (Current Sourcing)	
Description	**Value**
Voltage Supply Range	10-30 VDC
Output Circuit	PNP make function (NO)

Figure 2.4—PNP Type Lock, Unlock and RTL Sensors

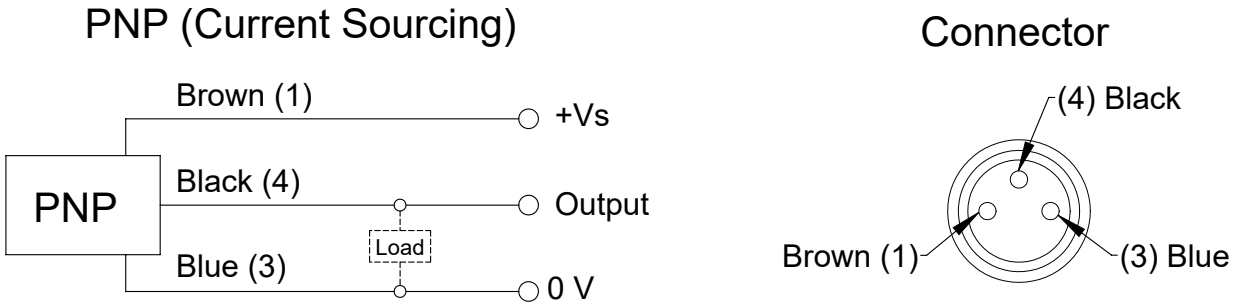

.0.3 NPN Type Lock, Unlock and RTL Sensors (-SP, -SE sensor designations)

These sensors are used on 9121-310xM-0-0-0-0-SP and 9121-310xM-0-0-0-0-SE.

Table 2.3—NPN (Current Sinking)	
Description	**Value**
Voltage Supply Range	10-30 VDC
Output Circuit	NPN make function (NO)

Figure 2.5—NPN Type Lock, Unlock and RTL Sensors

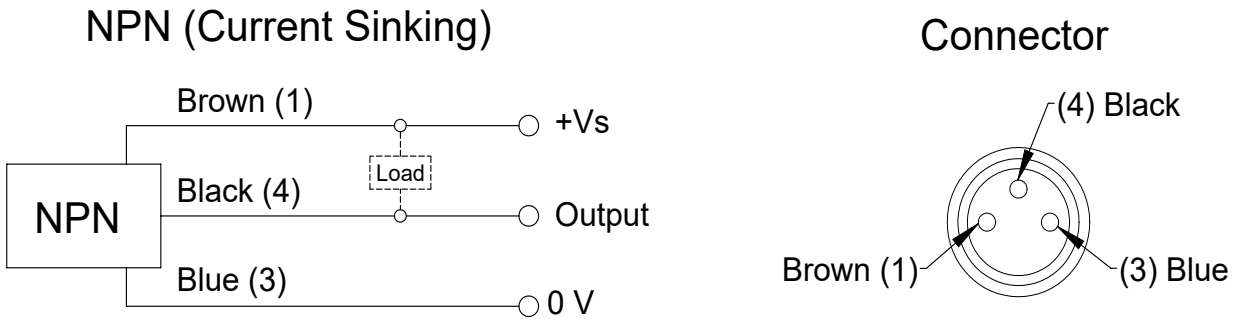

.0.4 Namur Type Lock and Unlock Sensors (-SV sensor designation)

This section applies to the following part number designator: (-SV).
Example: 9120-310xM-0-0-0-0-SV

Table 2.4—PNP (Current Sourcing)	
Description	**Lock and Unlock Sensors**
	Value
Voltage Supply Range	5-30 VDC
Operating Current	Remote
Non-Actuated Current Consumption	≥ 2.1 mA
Actuated Current Consumption	≤ 1.2 mA
Nominal Sensing Distance Sn	1.0 mm
Output Circuit	2-Wire DC NAMUR

Figure 2.6—NAMUR Type Lock and Unlock Sensors

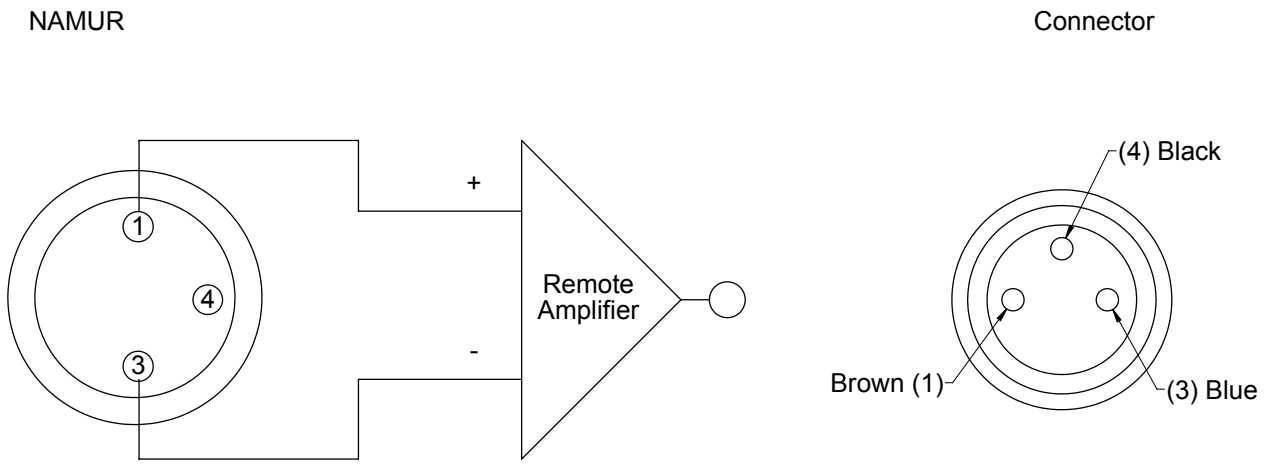

Output: Y1

3. Operation

The Master plate locking mechanism is pneumatically driven to couple and uncouple with the Tool plate bearing race.

CAUTION: Operation of the Tool Changer is dependent on maintaining an air pressure of 60 to 100 psi (4.1 - 6.9 bar). Damage to the locking mechanism could occur. Robot motion must be halted if the air supply pressure drops below 60 psi (4.1 bar).

NOTICE: All Tool Changers are lubricated prior to shipment. The customer must apply additional lubricant to the locking mechanism components and alignment pins prior to operation. Tubes of lubricant for this purpose are shipped with every Tool Changer. Standard Tool Changers require MobilGrease XHP222 Special (a NLGI #2 lithium complex grease with molybdenum disulfide). For custom applications, such as food grade or surgical applications, specialized lubricants might be required.

Coupling should occur with the Master plate in the No-Touch™ locking zone. As coupling occurs, the Master plate should pull the Tool plate into the locked position.

Program the robot to minimize misalignment during coupling and uncoupling. Greater offsets can be accommodated by the Master and Tool plates but will increase wear. Misalignments can be caused by improper tool stand design. Refer to Tool Storage Considerations section.

Figure 3.1—Offset Definitions

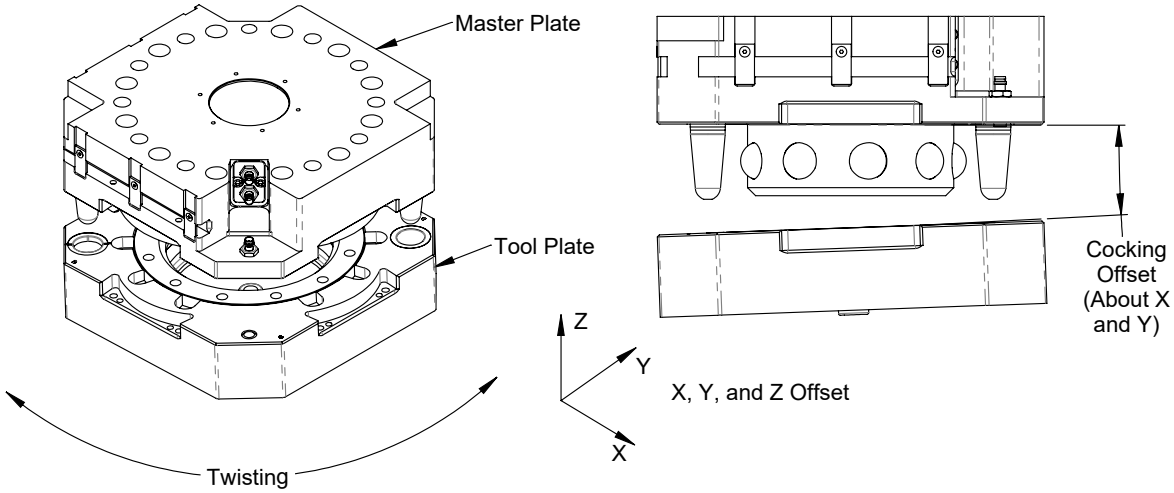

Table 3.1—Maximum Recommended Offsets Prior to Coupling				
Model	**No-Touch Zone Z Offset (Max)[1]**	**X and Y Offset (Max) [2]**	**Cocking Offset (Max)**	**Twisting Offset (Max)**
QC-310	0.10” (2.5 mm)	±0.08” (2 mm)	±0.7°	±1°

Notes:
1. Maximum values shown. Decreasing values minimizes wear.
2. Allowable values may be greater, but greater offsets increase wear.

3.1 Conditions for Coupling

The following conditions should be considered when operating the Tool Changer. For more details about programming the robot, refer to the Operation section of the Control/Signal Module Manual.

CAUTION: Do not attempt to couple the Tool Changer when in locked position. The locking mechanism must be in the unlock position when attempting to couple the Tool Changer. Failure to adhere to this condition may result in damage to the unit and/or the robot. Always unlock the Master prior to coupling to a Tool.

1. Unlock the Tool Changer by removing air pressure from the lock port and supplying air pressure to the unlock port (if equipped, the unlock sensor indicates the Tool Changer is unlocked).

NOTICE: For Tool Changers with a control/signal module and air/valve adapters with a double solenoid valve, turn the Unlatch output ON and turn the Latch output OFF. For Tool Changers with a control/signal module and air/valve adapters with a single solenoid valve, turn the Unlatch output ON. Some control/signal modules prevent the Tool Changer from being unlocked unless the Master and Tool are coupled and nested properly in the tool stand, a manual override procedure is required to unlock the Tool Changer. Refer to your Control/Signal Module Manual for instructions.

2. Position the Master above the Tool and move the Master into ready to lock position. The mating surfaces of the Master and Tool should be parallel and not touching. Make sure that the tapered alignment pins from the Master enter the alignment holes on the Tool. The alignment pins should be relatively concentric with the alignment bushings with no contact between the two.
3. It is recommended that the mating faces of the Master and Tool not be touching but be within the No-Touch distance of each other when coupling to minimize stress and wear on the locking mechanism. The locking mechanism allows the Master to “pull up” the Tool with gaps between the two sides.

CAUTION: Direct contact of the Master and Tool mating surfaces is not suggested or required just prior to coupling. Contact may result in damage to the unit and/or the robot. No-Touch locking technology allows the unit to couple with a separation distance between the Master and Tool.

4. The RTL (Ready-To-Lock) sensor and target that are built into the Tool Changer must be positioned within approximately 0.05” (1.5 mm) of each other for the sensors to detect Tool presence. RTL signals are not required to couple the Tool Changer but are recommended as a confirmation of coupling prior to removing the Tool from the tool stand.

NOTICE: At this point, communication is initiated with the ATI Tool and downstream nodes. If equipped, Tool-ID and communications become available. Depending on the type of control/signal module, additional notifications such as RTLV, TSRV, TSIV, Tool Present, Unlatch Enabled, and other notifications can provide verification of properly functioning system components.

5. Couple the Tool Changer by releasing the air pressure from the unlock port and supplying air pressure to the lock port. Air must be maintained on the lock port during operation to assure rigid coupling (if equipped, the lock sensor indicates the Tool Changer is in the locked position).

NOTICE: For Tool Changers with a control/signal module and air/valve adapters with a double solenoid valve, turn the Unlatch output OFF and turn the Latch output ON. For Tool Changers with a control/signal module and air/valve adapters with a single solenoid valve, turn the Unlatch output OFF.

6. A sufficient delay must be programmed between locking valve actuation and robot motion so that the locking process is complete before moving the robot. If equipped with Lock and Unlock sensors, the Lock signal should read “ON” (true) and the Unlock signal should read “OFF” (false).

NOTICE: If the locking mechanism has been actuated and both the Lock and Unlock signals are OFF, then a “missed tool” condition has occurred (for example, the Tool is not in the stand or is not positioned properly). **In this case an error should be generated and the robot program halted.** The situation requires manual inspection to determine the cause of the problem. Some configurations will require a manual unlock of the Master plate before attempting coupling, refer to the Control/Signal Module Manual for instructions.

NOTICE: The locking mechanism must be in the unlock state before another attempt is made to couple or damage could occur to the robot and/or the Tool Changer.

3.2 Fail-Safe Operation

A fail-safe condition occurs when there is an unintended loss of lock air pressure to the Master plate. When air pressure is lost, the Tool Changer relaxes and there may be a slight separation between the Master and Tool plates. The lock sensor may indicate that the unit is not locked. ATI’s patented fail-safe feature utilizes a multi-tapered cam to trap the ball bearings and prevent an unintended release of the Tool plate. Positional accuracy of the tooling is not maintained during this fail-safe condition. Do not operate the Tool Changer in the fail-safe condition. If source air is lost to the unit, movement should be halted until air pressure is restored.

After air pressure is re-established to the Master plate, the locking mechanism will energize and securely lock the Master and Tool plates together. In some cases when the load on the tool changer is significantly off center, it may be necessary to position the load underneath the tool changer or return the tool to the tool storage location to ensure a secure lock condition. If equipped, make sure the lock sensor indicates the Tool Changer is in the locked position before resuming normal operations. Consult your Control/Signal Module Manual for specific error recovery information.

CAUTION: Do not use the Tool Changer in a fail-safe condition. Damage to the locking mechanism could occur. Re-establish air pressure and ensure the Tool Changer is in a secure lock position before returning to normal operations.

3.3 Conditions for Uncoupling

Refer to your Air/Valve Adapter and/or Control/Signal Module Manual's Operation section for operation during coupling/uncoupling.

1. Move the robot to position the Tool plate in the tool stand. The position for coupling and uncoupling are the same.

NOTICE: Depending on the type of control/signal module, additional notifications such as TSRV, TSIV, and other notifications can provide verification of properly functioning system components.

2. Unlock the Tool Changer by releasing the air pressure from the lock port and supplying air pressure to the unlock port. The Tool Changer locking mechanism moves to the unlocked position and the Tool plate releases from the Master plate. (If equipped, the unlock sensor indicates the Tool Changer is unlocked).

NOTICE: For Tool Changers with a control/signal module and air/valve adapters with a double solenoid valve, turn the Unlatch output ON and turn the Latch output OFF. For Tool Changers with a control/signal module and air/valve adapters with a single solenoid valve, turn the Unlatch output ON.

CAUTION: This Tool Changer may be equipped with a tool stand Interlock (TSI) feature that physically breaks the Unlatch solenoid circuit. Proper use of the TSI prevents unwanted Unlock software commands from being recognized until the circuit is made. Make sure the Tool Changer is positioned properly to trip actuate the TSI switch when the Tool is in the tool stand.

3. A sufficient delay must be programmed between unlocking valve actuation and robot motion so that the unlocking process is complete before moving the robot. If equipped with lock and unlock sensors, the Unlock signal should read "on" (true) and the Lock signal should read "off" (false). **Any other condition indicates a problem and the robot program should be halted.** Once the Lock and Unlock signals in the proper state, the Master plate may be moved away from the Tool plate in the axial direction.

The robot and Master plate can now proceed to another Tool plate for coupling and subsequent operations.

3.4 Tool Identification

When using multiple Tools, it is good practice to implement a Tool-ID system that identifies each Tool with a unique code. Tool-ID can be used to verify that the robot has picked up the proper Tool. Modules with Tool-ID are available for purchase through the ATI website. Go to *http://www.ati-ia.com/products/toolchanger/tool_changer_modules.aspx* for products available or contact ATI for assistance.

3.5 Tool Storage Considerations

NOTICE: Tool stand design is critical to the operation of the Tool Changer. Improperly designed tool stands can cause jamming and excessive wear of the Tool Changer components.

Tool plates with customer tooling attached may be stored in a tool stand. ATI provides compatible tool stands designed for durability, longevity, and maximum adaptability to fit most customers' applications. The ATI TSL (Tool Stand Large) system is compatible with ATI Tool Changer sizes QC-150 and larger. The TSL systems can be equipped with horizontal modules, clamp modules, and different types of tool sensing. Visit the ATI Web Site *http://www.ati-ia.com/products/toolchanger/toolstand/large/LargeStand.aspx* for products available or contact ATI for assistance.

If the customer is supplying the tool stand, it must provide a fixed, repeatable, level, and stable position for tool pick-up and drop-off. The tool stand must support the weight of the Tool Changer Tool plate, tool interface plate, optional modules, cables, hoses, and customer tooling without allowing deflection in excess of the offsets specified.

Ideally, the Tool should be hanging vertically in the tool stand so that gravity assists to uncouple the Tool plate from the Master plate during unlocking. It is possible to design tool stands that hold tools in the horizontal position, but the necessary compliance must be provided during coupling and uncoupling. In general, "horizontal-position" tool stands cause more wear on the locking mechanism and locating features of the Tool Changer and tool stand.

A variety of methods may be used to position the Tool in the tool stand. A common method is to use tapered alignment pins and bushings. Robot programming and positional repeatability are vital in Tool pick-up and drop-off.

A sensor that detects the presence of the Tool in the tool stand is recommended. The sensor may be used prior to coupling to ensure the Tool is seated in the stand. Sensors may also be used as the robot starts to move away after uncoupling. Sensors provide a safety measure if a Tool becomes jammed in the stand or if the Tool fails to release from the robot.

Proximity sensors should be positioned so that the sensing face is vertical to prevent metal shavings, weld spatter, or other debris from falling on the sensor and creating false readings.

Tool stands debris shields can cover Tools and modules to protect them in dirty environments, such as grinding or welding. Alternatively, positioning tool stands in areas shielded from weld spatter, fluids, adhesives, or other debris would eliminate the need for debris shields.

4. Maintenance

WARNING: Do not perform maintenance or repair(s) on the Tool Changer or modules unless the Tool is safely supported or placed in the tool stand, all energized circuits (e.g. electrical, air, water, etc.) are turned off, pressurized connections are purged and power is discharged from circuits in accordance with the customer specific safety practices and policies. Injury or equipment damage can occur with the Tool not placed and energized circuits on. Place the Tool in the tool stand, turn off and discharge all energized circuits, purge all pressurized connections, and verify all circuits are de-energized before performing maintenance or repair(s) on the Tool Changer or modules.

NOTICE: The cleanliness of the work environment strongly influences the trouble free operation of the Tool Changer. The dirtier the environment, the greater the need for protection against debris. Protection of the entire EOAT, the Master, the Tool and all of the modules may be necessary. Protective measures include the following:

Placement of the tool stands away from the debris generators.

- Covers incorporated into the tool stands.
- Guards, deflectors, air curtains, and similar devices built into the EOAT and the tool stand.

4.1 Preventive Maintenance

A visual inspection and preventive maintenance schedule is provided in the following table. Detailed assembly drawings are provided in *Section 8—Drawings* of this manual. Refer to module sections for detailed preventive maintenance steps for all utility modules.

Table 4.1—Maintenance

Application(s)	Tool Change Frequency	Inspection Schedule
General Usage Material Handling Docking Station	> 1 per minute	Weekly
	< 1 per minute	Monthly
Welding/Servo/Deburring, Foundry Operations (Dirty Environments)	All	Weekly

Checklist

Mounting Fasteners

- ☐ Inspect fasteners for proper torque, interferences, and wear. Tighten and correct as required. Refer to *Table 2.1*

Ball Bearings/Alignment Pins/Bushings/Bearing Race

- ☐ Inspect for wear and proper lubrication. MobilGrease XHP222 Special a NLGI #2 lithium complex grease with molybdenum disulfide additive is suggested for locking mechanism and alignment pin lubrication. Over time, lubricants can become contaminated with debris. Therefore, it is recommended to thoroughly clean the existing grease and replace with new as needed. See *Section 4.2—Cleaning and Lubrication of the Locking Mechanism and Alignment Pins.*
- ☐ Inspect for excessive alignment pin/bushing wear, may be an indication of poor robot position during pickup/drop-off. Adjust robot position as needed. Check tool stand for wear and alignment problems. To replace worn alignment pins, refer to *Section 5.2.3—Alignment Pin Replacement.*
- ☐ Inspect for wear on the ball bearings/bearing race, may be an indication of excessive loading.

Sensors and Cables

- ☐ Inspect sensor cable connectors for tightness, if loose tighten connections.
- ☐ Inspect sensor cables for any damage, cuts, and abrasion. Replace as necessary. Refer to *Section 5.2.1.1—Individual Lock and Unlock Sensor Assemblies Replacement* and *Section 5.2.1.2—RTL Sensor Cable Replacement Procedure*.

Hoses

- ☐ Inspect hose connection for tightness and leaks. If leaking or loose secure hose connection.
- ☐ Inspect hoses for interferences, abrasions, cuts, and leaks. Replace as required.

Electrical Contacts/Pin Block (Modules)

- ☐ Inspect for damage, debris, and stuck/burnt pins. Clean pin blocks as required, refer to *Section 4.3—Pin Block Inspection and Cleaning.*

Seals (Modules)

- ☐ Inspect for wear, abrasion, and cuts. Refer to *Section 5.2.2—V-ring Seal Replacement*

4.2 Cleaning and Lubrication of the Locking Mechanism and Alignment Pins

Supplies required: *Clean rag, MobilGrease XHP222 Special Grease*

1. Place the Tool in a secure location.
2. Uncouple the Master and Tool plates.
3. Turn off and de-energize all energized circuits (e.g. electrical, air, water, etc.).
4. Use a clean rag to thoroughly remove any lubricant and debris from the ball bearings, male coupling, cam, and alignment pins.

Figure 4.1—Cleaning Ball Bearings and Outer Surfaces of Male Coupling

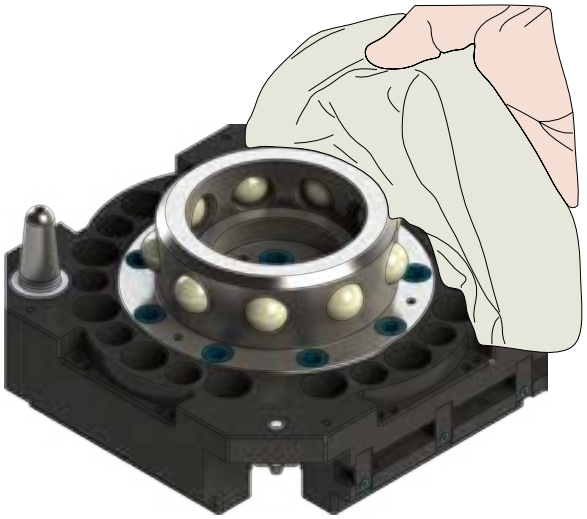

5. Use a clean rag to thoroughly remove any lubricant and debris from the inner surface of the male coupling and cam.

Figure 4.2—Cleaning Ball Bearings, Cam and Inner Surfaces of Male Coupling

6. Check each ball bearing to make sure it moves freely in the male coupling. Additional cleaning may be necessary to free up any ball bearings that are sticking in place.

Figure 4.3—Check Ball Bearing Movement

7. Apply a liberal coating of lubricant to the ball bearings, the male coupling (inside and out), and the alignment pins.

Figure 4.4—Apply Lubricant to Locking Mechanism

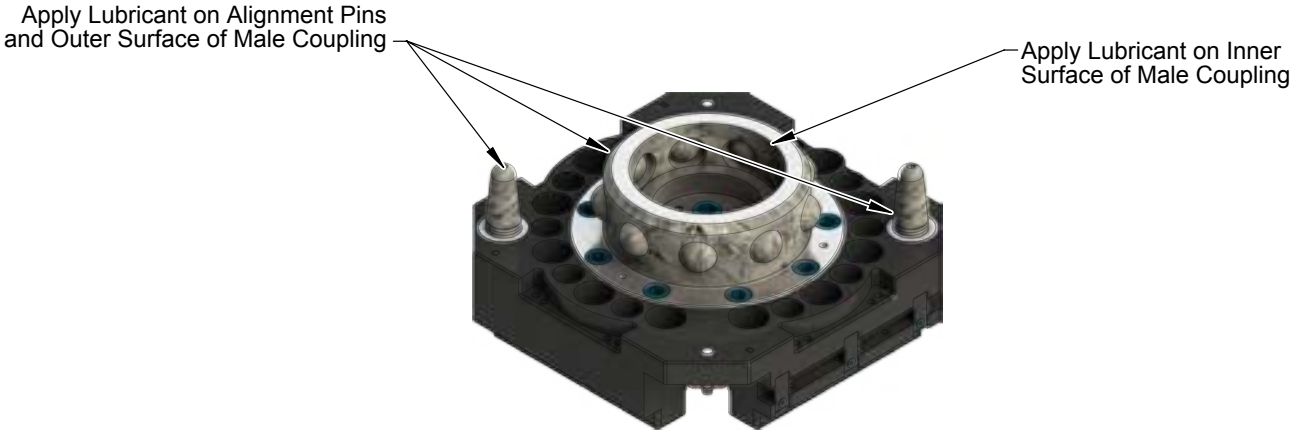

8. Use a clean rag to thoroughly remove any lubricant and debris from the Tool plate bearing race and bushings.

NOTICE: No application of lubrication is necessary on the Tool plate components.

9. After the procedure is complete, resume normal operation.

Figure 4.5—Clean Tool Plate Surfaces of Locking Mechanism

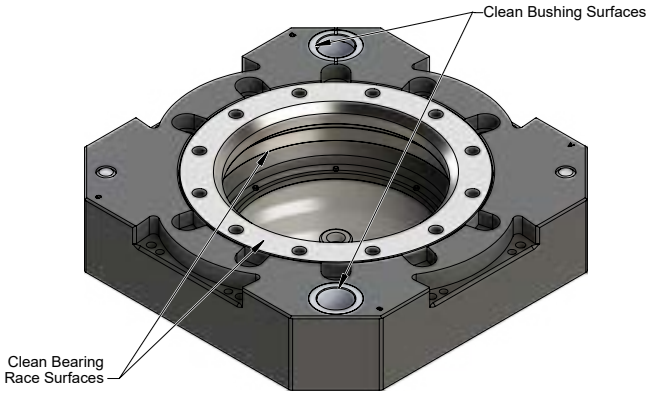

4.3 Pin Block Inspection and Cleaning

Tools required: *Nylon Brush (ATI Part Number 3690-0000064-60)*

1. Place the Tool in a secure location.
2. Uncouple the Master and Tool plates.
3. Turn off and de-energize all energized circuits (e.g. electrical, air, water, etc.).
4. Inspect the Master and Tool pin blocks for debris or darkened pins.

Figure 4.6—Inspect Master and Tool Pin Blocks

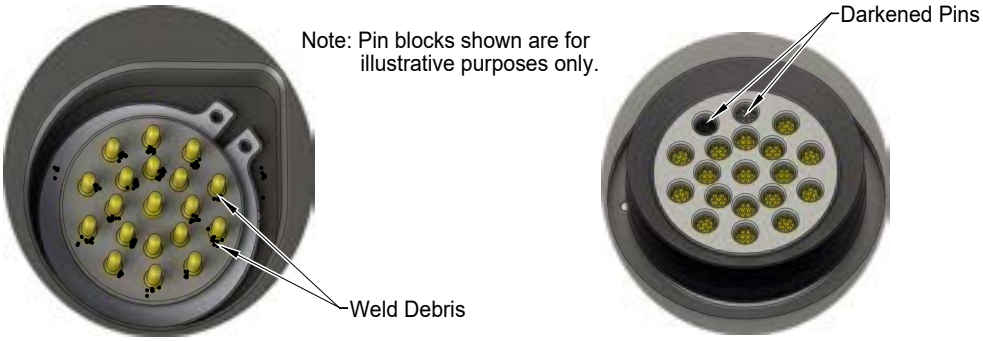

Tool Module Pin Block Master Module Pin Block

5. If debris or darkened pins are present, use a vacuum to remove the debris, and clean using a nylon brush (ATI Part Number 3690-0000064-60).

> **NOTICE:** Do not use an abrasive media, cleaners, or solvents to clean the contact pins. Using abrasive media, cleaners, or solvents will cause damage to the contact surface, or cause pins to stick. Clean contact surfaces with a vacuum or non-abrasive media such as a nylon brush (ATI Part Number 3690-0000064-60)

Figure 4.7—Clean Pin Blocks with a Nylon Brush

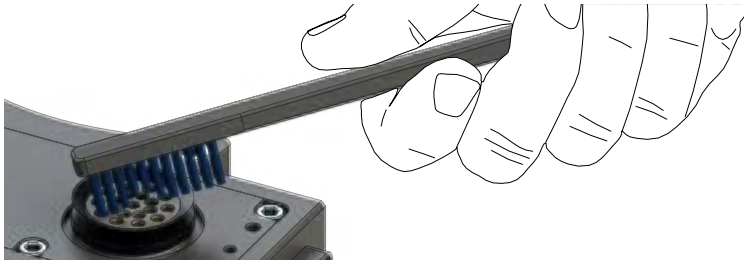

6. Inspect the Master and Tool pin blocks for stuck pins or pin block damage.

Figure 4.8—Stuck Pin and Pin Block Damage

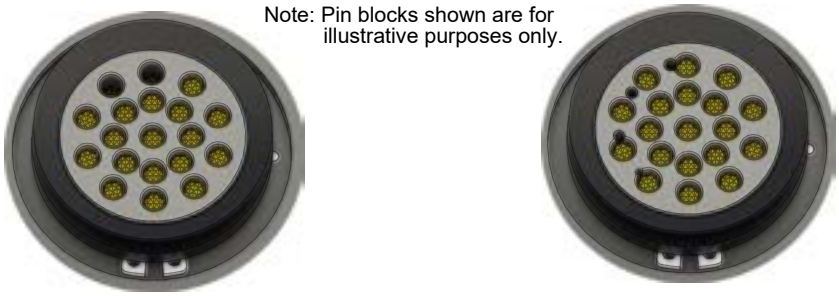

Stuck Pins Pin Block Damage

7. If there are stuck pins or pin block damage, contact ATI for either a possible pin replacement procedure or module replacement.
8. Safely resume normal operation.

5. Troubleshooting and Service Procedures

The following section provides troubleshooting and service information to help diagnose conditions and repair the Tool Changer or control/signal module.

WARNING: Do not perform maintenance or repair(s) on the Tool Changer or modules unless the Tool is safely supported or placed in the tool stand, all energized circuits (e.g. electrical, air, water, etc.) are turned off, pressurized connections are purged and power is discharged from circuits in accordance with the customer specific safety practices and policies. Injury or equipment damage can occur with the Tool not placed and energized circuits on. Place the Tool in the tool stand, turn off and discharge all energized circuits, purge all pressurized connections, and verify all circuits are de-energized before performing maintenance or repair(s) on the Tool Changer or modules.

5.1 Troubleshooting Procedures

Check these conditions for all symptoms prior to troubleshooting:

- Proper pneumatic and electrical connections have been made to the Quick Change.
- Air is supplied at a minimum of 60 psi (4.1 Bar).
- No air or vacuum can be trapped in a de-energized Lock or Unlock Port (pressure must be vented to atmosphere).

Table 5.1—QC-310 Troubleshooting

Symptom	Cause	Resolution
Tool Changer will not lock and/or unlock (or Lock sensor does not indicate Tool Changer is Locked)	Debris caught between the Master and Tool plates.	Clean debris from between the Master and Tool plates. Verify mounting fasteners are secure and does not protrude above the mating surfaces.
	Insufficient or no air pressure supply to the Lock or Unlock ports.	Verified proper air pressure and pneumatic valve is supplied. Refer to *Section 2.7—Pneumatic Requirements*.
	Air pressure trapped in de-energized Lock or Unlock ports.	Air pressure must be vented to the atmosphere properly, refer to *Section 2.7—Pneumatic Requirements*.
	Pneumatic connections loose or damaged.	Inspect hose connection for tightness and leaks. If leaking or loose secure hose connection. Inspect hoses for interferences, abrasions, cuts, and leaks. Replace as required.
	The ball bearings and/or cam are not moving freely in the male coupling.	Clean and lubricate as needed to restore smooth operation (see *Section 4.2—Cleaning and Lubrication of the Locking Mechanism and Alignment Pins*.
	The Master and Tool plates are not within the specified No-Touch sone when attempting to lock.	Check that the Tool is properly seated in the tool stand. Refer to *Section 8—Drawings*. Re-teach the robot to bring the Master and Tool plate closer together prior to attempting to lock.
Unit is locked but Lock signal does not read “on” (true).	Lock sensor/cable is damaged.	Replace the lock sensor sub-assembly as necessary. Refer to *Section Table 3.1——Maximum Recommended Offsets Prior to Coupling* and *Section 5.2.2—V-ring Seal Replacement*.
Unit is unlocked but Unlock signal does not read “on” (true).	Unlock sensor/cable is damaged.	Replace the unlock sensor sub-assembly as necessary. Refer to *Section Table 3.1——Maximum Recommended Offsets Prior to Coupling* and *Section 5.2.2—V-ring Seal Replacement*.
Units Equipped with Electrical/Servo/Control/Signal Modules		

Table 5.1—QC-310 Troubleshooting		
Symptom	**Cause**	**Resolution**
Loss of Communication	Debris in and around contact pins. Contact pin worn or damaged.	Inspect V-ring seal for damage, and if necessary, replace the damaged seal. Refer to *Section 5.2.2—V-ring Seal Replacement*.
	Cable connections loose or cables damaged.	Check that the cable connections are secure, and cables are not damaged.

5.2 Service Procedures

Component replacement procedures are provided in the following section.

.0.5 Sensor Replacement Procedures

Figure 5.1—Determine what type of Lock/Unlock sensors the Tool Changer uses:

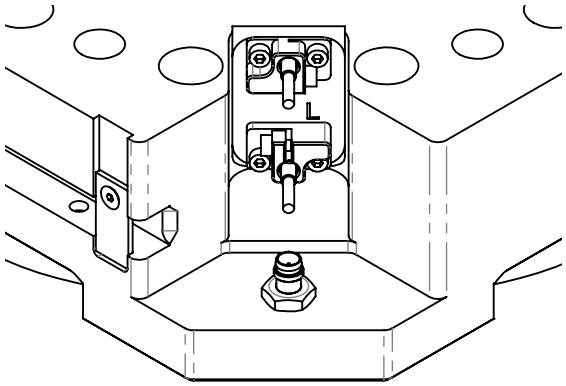

Lock and Unlock Sensor Assemblies Replacement (Current Revision)
(Sensor Designations: -SM, -ST, -SP, -SMA, -S0)
Refer to *Section 5.2.1.1—Individual Lock and Unlock Sensor Assemblies Replacement*

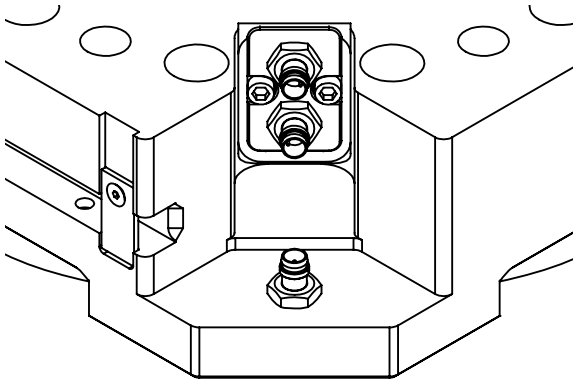

Lock and Unlock Sensor Assembly Replacement
Contact ATI for replacement procedure and serviceable part information.

5.2.0.1 Individual Lock and Unlock Sensor Assemblies Replacement

Parts required: *Refer to Section 6—Serviceable Parts*

Tools required: *2 mm, 2.5 mm, and 5 mm hex key, torque wrench*

1. Place the Tool in a secure location.
2. Uncouple the Master and Tool plates.
3. Turn off and de-energize all energized circuits (e.g. electrical, air, water, etc.).
4. If there is an optional module on Flat D, remove the (2) M6 socket head cap screws securing the module(s) to the Tool Changer body using a 5 mm hex key and lift it off from Flat D. Refer to *Figure 5.2.*
5. Remove the (3) M3 socket flat head cap screws and three cable retaining tabs on Flat D of the Tool Changer body using a 2 mm hex key.
6. Unscrew the Lock and/or Unlock sensor cable connector from the air/valve adapter or control/signal module.
7. Remove the (2) M3 socket head cap screws that secure the Lock and/or Unlock sensor assembly to the Tool Changer body using a 2.5 mm hex key. Pull the sensor assembly straight out from the Tool Changer body.
8. Remove the Lock and/or Unlock sensor assembly from the cable channel of the Tool Changer body. There is an O-ring around the sensor between the assembly and the Tool Changer body, ensure O-ring came off with old sensor before continuing. Discard the removed sensor assembly.

> **CAUTION:** The Lock and Unlock sensor assemblies are precision aligned and permanently assembled at the factory. Do not attempt to disassemble and rebuild.

Figure 5.2—Lock and Unlock Sensor Assembly Replacement

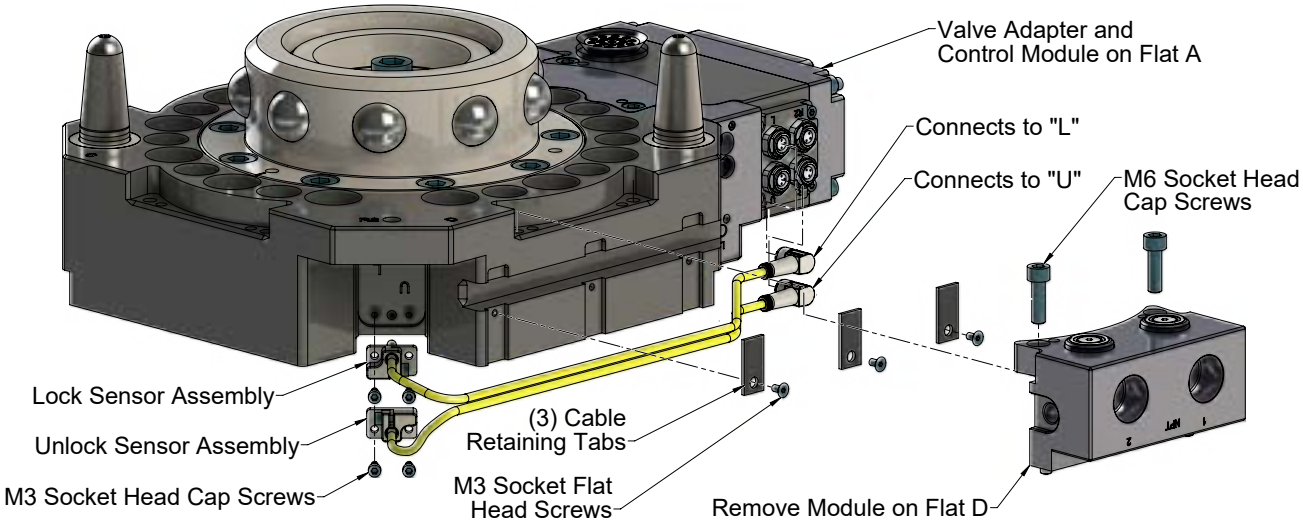

9. Route the new Lock and/or Unlock sensor cable into the cable channel of the Tool Changer body.
10. Attach the Lock and/or Unlock sensor cable connectors to the proper connector on the control/signal module.
11. Insert the Lock and/or Unlock sensor assembly into the Tool Changer body as shown in *Figure 5.2.* Ensure that new O-ring is in place before inserting sensor.

12. Secure the sensor assembly using the (2) M3 socket head cap screws using a 2.5 mm hex key. Tighten to 12 in-lbs (1.4 Nm).
13. Install the (3) cable retaining tabs on Flat D of the Tool Changer body and secure with the (3) M3 socket flat head cap screws using a 2 mm hex key. Tighten to contact.
14. If optional modules were installed on Flat D, re-install modules.
15. Apply Loctite 242 to the M6 socket head cap screws fasteners.
16. Install the (2) M6 socket head screws securing the module to the Tool Changer body using a 5 mm hex key and tighten to 70 in-lbs (7.9 Nm).
17. Confirm the operation of the Unlock sensor by unlocking the Tool Changer and verify the Unlock sensor cable LED is on.

Figure 5.3—Unlock Sensor Cable LEDs

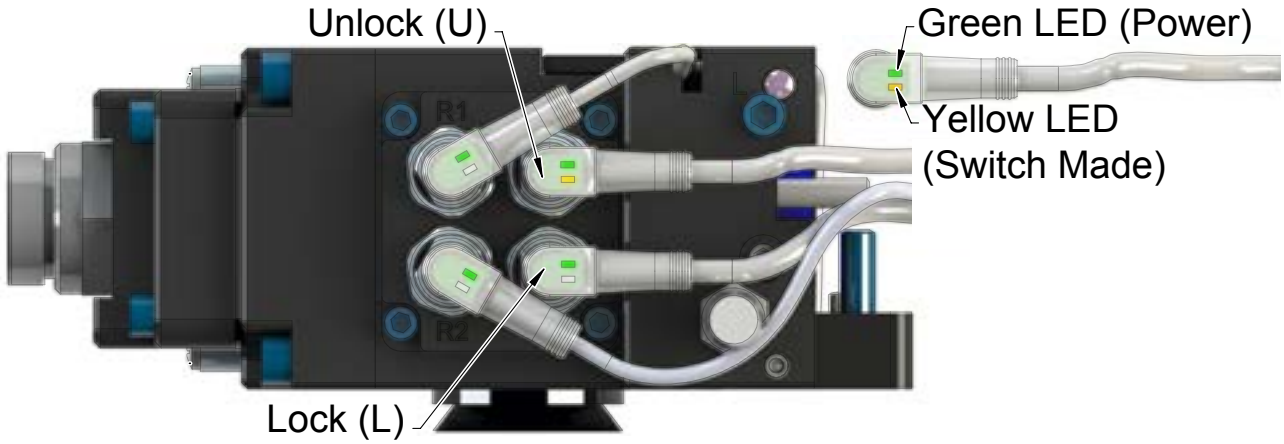

18. Confirm the operation of the Lock sensor by locking the Tool Changer and verifying the Lock sensor cable LED is on.

Figure 5.4—Lock Sensor Cable LEDs

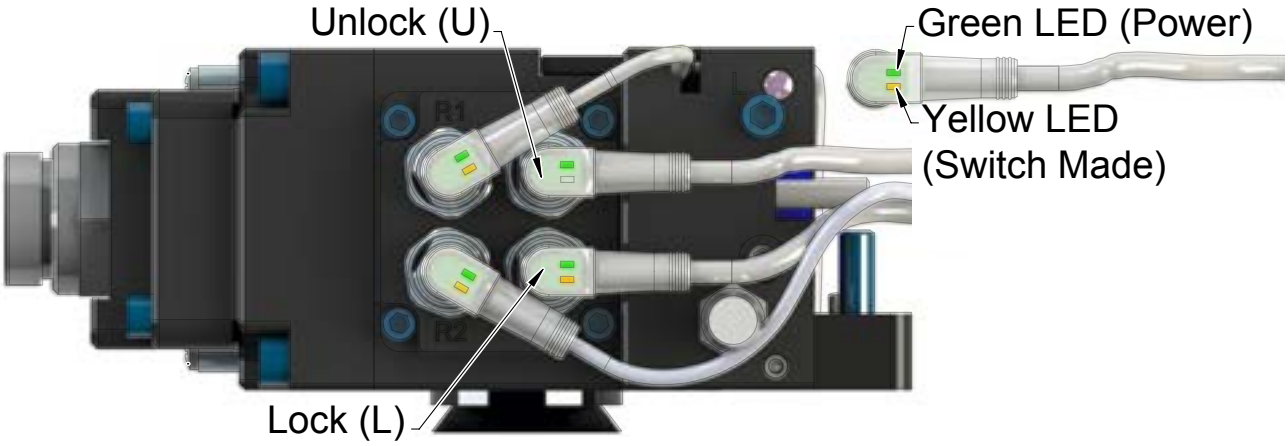

19. Safely resume normal operation.

.0.5.1 RTL Sensor Cable Replacement Procedure

Parts required: *Refer to Section 6—Serviceable Parts*

Tools required: *2 mm, 2.5 mm, and 5 mm hex key, torque wrench*

1. Place the Tool in a secure location.
2. Uncouple the Master and Tool plates.
3. Turn off and de-energize all energized circuits (e.g. electrical, air, water, etc.).
4. Unscrew the (4) sensor cable connectors from the air/valve adapter or control/signal module to the Tool Changer.
5. Remove the (2) M5 socket head cap screws securing air/valve adapter and control/signal module to the Tool Changer body using a 4 mm hex key.
6. Remove the (2) M6 socket head cap screws securing air/valve adapter and control/signal module to the Tool Changer body using a 5 mm hex key. Retain the (2) O-rings between the air/valve adapter and the Tool Changer body.
7. If there is a module on flat D, remove the (2) M6 socket head cap screws securing module to the Tool Changer body using a 5 mm hex key.
8. Remove the (3) M3 socket flat head cap screws and (3) cable retaining tabs on Flat A and Flat D of the Tool Changer body using a 2 mm hex key.
9. Disconnect the sensor cable(s) from the sensor by pulling back on the locking sleeve. Discard the cable(s).

Figure 5.5—RTL Cable Replacement

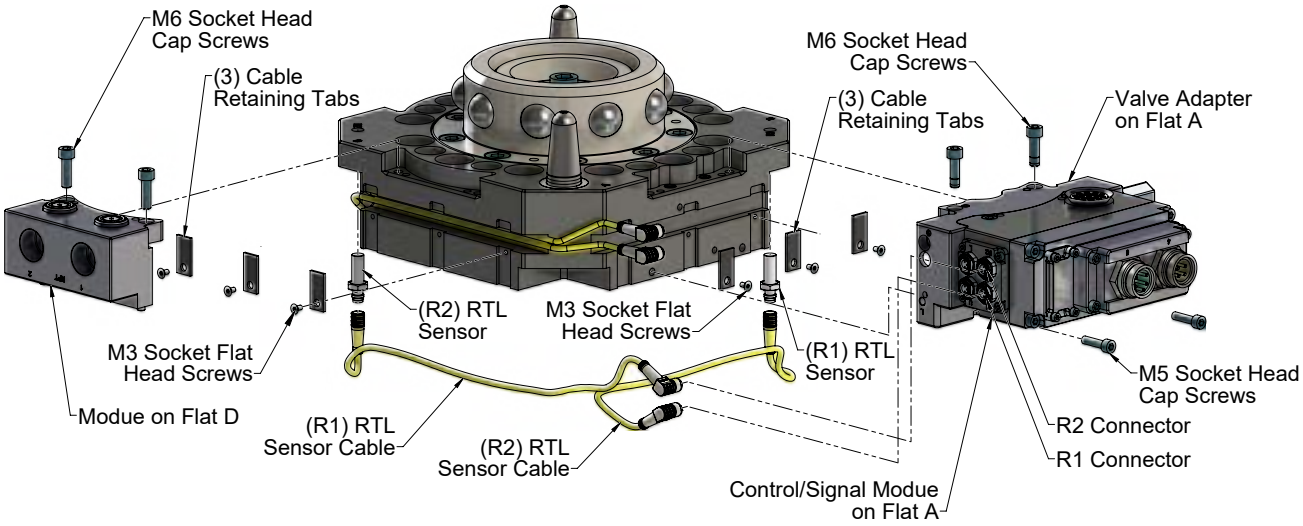

10. Install the sensor cable, routing the cable into the cable channel of the Tool Changer body.
11. Install the (3) cable retaining tabs on Flat A and Flat D of the Tool Changer body and secure with the (3) M3 socket flat head cap screws using a 2 mm hex key. Tighten to contact.
12. Install the air/valve adapter and control/signal module on Flat A.
13. Apply Loctite® 242 to the supplied M6 socket head cap screws. Use a 5 mm hex key, to install the (2) M6 socket head cap screws and tighten to 70 in-lbs (7.9 Nm) securing air/valve adapter and control/signal module to the Tool Changer body.

14. Apply Loctite® 222 to the (2) supplied M5 socket head cap screws. Use a 4 mm hex key, to install the (2) M5 socket head cap screws and tighten to 55 in-lbs (6.2 Nm) securing air/valve adapter and control/signal module to the Tool Changer body.
15. If a module was removed from Flat D, Apply Loctite® 242 to the supplied M6 socket head cap screws. Use a 5 mm hex key, to install the (2) M6 socket head cap screws and tighten to 70 in-lbs (7.9 Nm).
16. Connect the RTL sensor cable to the sensor and the air/valve adapter or control/signal module.
17. Confirm the operation of the RTL sensor by bringing a metallic object into close proximity to the face of the sensor and watching for the LED in the sensor cable to light up.

NOTICE: Some control/signal modules supply power to the RTL sensors in series. The RTL (R2) sensor must be switched before power is supplied to the RTL (R1) sensor. If this is the case bring a metallic object into close proximity of both the RTL (R1 and R2) sensor.

Figure 5.6—RTL (R1 and R2) Sensor Cable LEDs

18. Install the Master plate to the robot arm or interface plate, refer to *Section 2.2—Master Plate Installation*.
19. Safely resume normal operation.

.0.5.2 RTL Sensor Replacement Procedure

Parts required: *Refer to Section 6—Serviceable Parts*

Tools required: *13 mm socket wrench, torque wrench*

1. Place the Tool in a secure location.
2. Uncouple the Master and Tool plates.
3. Turn off and de-energize all energized circuits (e.g. electrical, air, water, etc.).
4. Disconnect the RTL sensor cable from the sensor by pulling back on the locking sleeve.

Figure 5.7—RTL Sensor Replacement

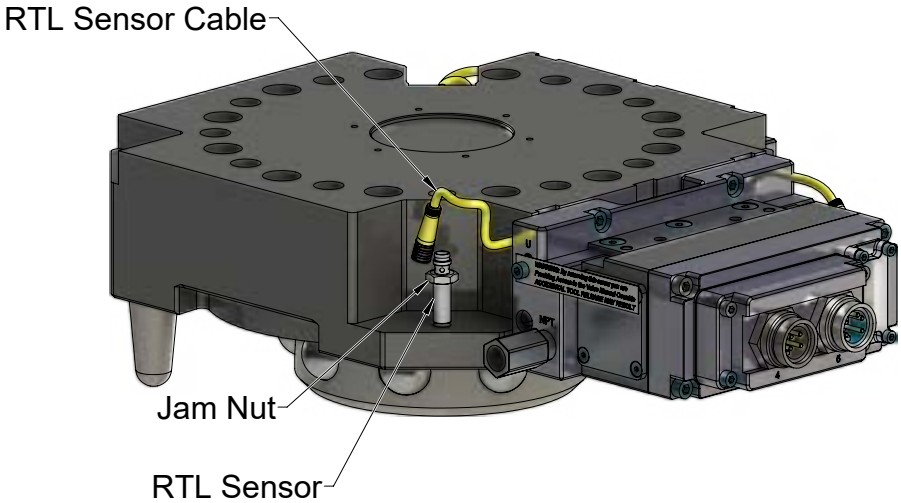

5. Loosen the jam nut securing the sensor to the Tool Changer body using a 13 mm socket wrench.
6. Unscrew the RTL sensor from the Tool Changer body.
7. Discard the removed RTL sensor.
8. Apply Loctite 222 to new RTL sensor.
9. Screw the new RTL sensor into the Tool Changer body until the face of the sensor is flush with the surrounding face of the Master body.
10. Tighten the jam nut securing the sensor to the Tool Changer body using a 13 mm socket wrench. Torque to 20 in-lbs (2.3 Nm).
11. Install the sensor cable routing the cable into the cable channel of the Tool Changer body and securing with the retaining tabs.
12. Connect the RTL sensor cable to the sensor and the air/valve adapter or control/signal module.
13. Confirm the operation of the RTL sensor by bringing a metallic object into close proximity to the face of the sensor and watching for the LED in the sensor cable to light up. Refer to *Figure 5.6*.

> **NOTICE:** Some control/signal modules supply power to the RTL sensors in series. The RTL (R2) sensor must be switched before power is supplied to the RTL (R1) sensor. If this is the case bring a metalic object into close proximity of both the RTL (R1 and R2) sensor.

14. Safely resume normal operation.

.0.6 V-ring Seal Replacement

Parts required: *Refer to Section 6—Serviceable Parts*

The seal protects the electrical connection between the Master and Tool module. If the seal becomes worn or damaged, replace the seal.

1. Place the Tool in a secure location.
2. Uncouple the Master and Tool plates.
3. Turn off and de-energize all energized circuits (e.g. electrical, air, water, etc.).
4. To remove the existing seal, pinch the edge of the seal, and pull the seal away from the pin block on the Master module.
5. To install a new seal, stretch the new seal over the shoulder of the pin block.
6. Push the seal hub down against the pin block.
7. Safely resume normal operation.

Figure 5.8—V-ring Seal Replacement

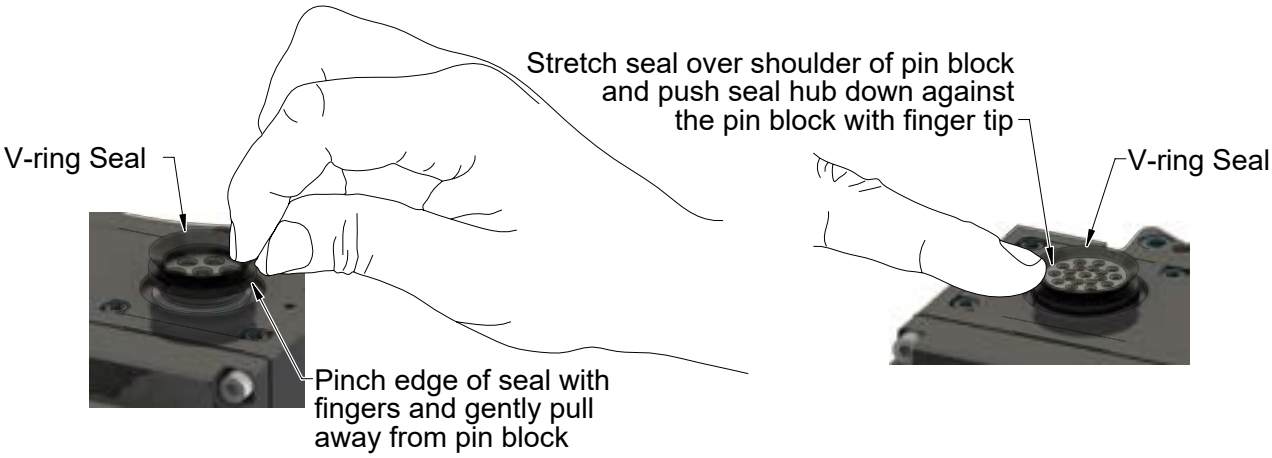

7.0.1 Alignment Pin Replacement

Parts required: *Refer to Section 6—Serviceable Parts*

Tools required: *3 mm or 4 mm hex key, torque wrench*

Supplies required: *Clean rag, Loctite 242, MobilGrease XHP222*

1. Place the Tool in a secure location.
2. Uncouple the Master and Tool plates.
3. Turn off and de-energize all energized circuits (e.g. electrical, air, water, etc.).
4. Unscrew the alignment pin assembly from the Master plate using a 4 mm hex key (see *Figure 5.9*). If alignment pin cannot be removed using the hex key in the tip, go to step *5*. If alignment was remove go to step *7*.

NOTICE: If the pin cannot be removed using the hex key in the tip, it may be necessary to remove it by other means, such as locking pliers.

Figure 5.9—4 mm Hex Key

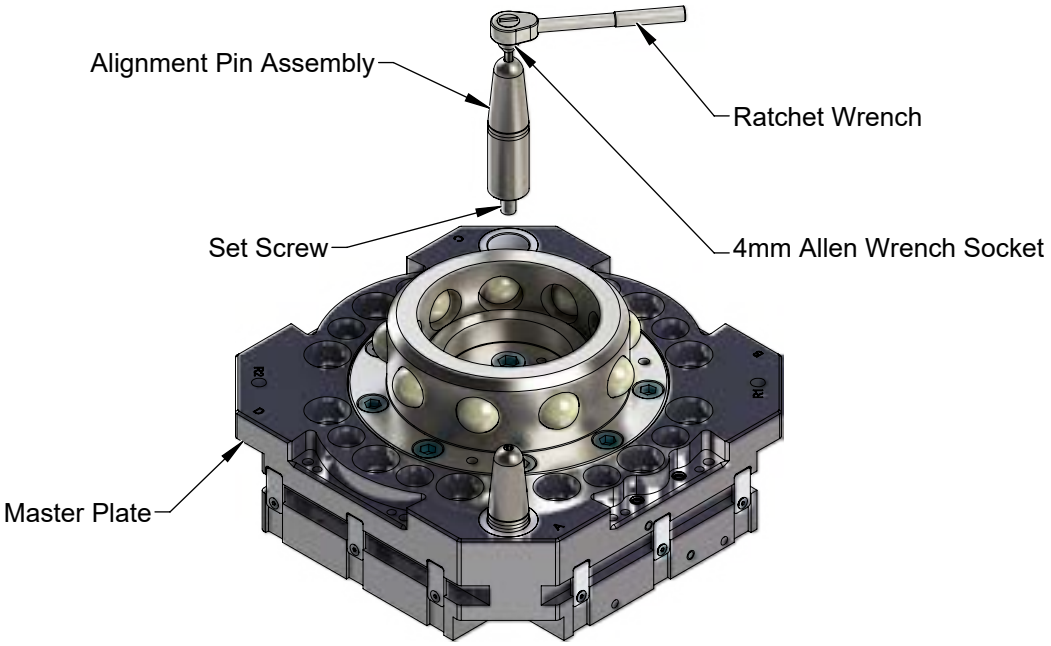

5. Alternately, use the access hole in the back side of the Master plate. If not already removed, remove the Master plate refer to *Section 2.3—Master Plate Removal*.
6. Use a 3 mm hex key to remove the alignment pin from the back side of the Master plate. Loosen the alignment pin by turning it clockwise, the alignment pin will be removed from the locking side of the Master plate.

Figure 5.10—3 mm Hex Key

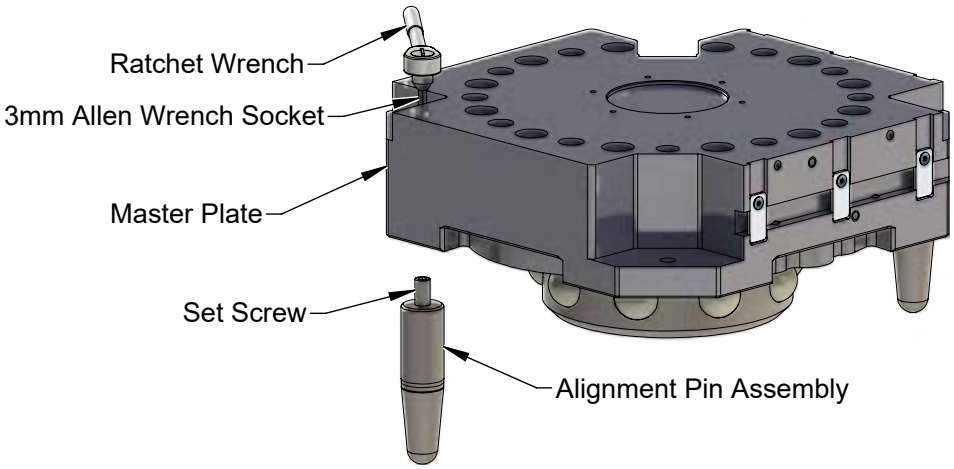

7. With the alignment been removed, verify that the assembly (pin and set screw) are intact. If the set screw portion of the assembly did not come out, remove it separately using the access hole in the back plate of the Master plate.
8. Apply Loctite 242 and install the new alignment pin assembly into the bushing on the Tool Changer using a 4 mm hex key. Tighten to 60 in-lbs (6.8 Nm).
9. Apply MobilGrease XHP222 Special grease to the Alignment Pin.
10. Safely resume normal operation.

6. Serviceable Parts

6.1 Models 9121-310xM-0-0-0-0-S0

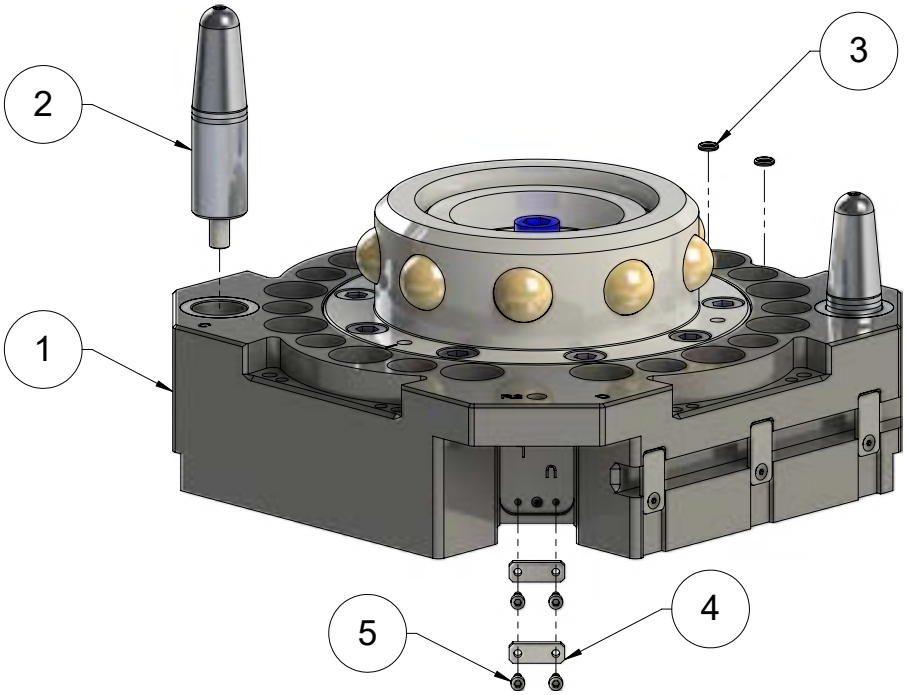

Table 6.1—QC-310 -SO Master Plate			
Item No.	**Qty**	**Part Number**	**Description**
1	1	9121-310AM-0-0-0-0-S0	Complete QC-310 Master plate, No Options
2	2	9005-20-1141	7/8” Two Piece Alignment Pin
3	2	3410-0001016-01	O-ring 1/16 x 1/8 I.D. x 1/4 O.D.
4	2	9005-20-1983	Sensor Bore Cover Plate Assembly, SS Screws
5	2	3500-1058008-21A	M3 x 8 Socket Head Cap Screw, SS, ND Ind. Microspheres Epoxy, Yellow. 0-3 uncoated lead thds. 5-7 coated thds

6.2 Models 9121-310xM-0-0-0-0-SM, 9121-310xM-0-0-0-SP, 9121-310xM-0-0-0-0-SMA, 9121-310xM-0-0-0-0-ST, and 9121-310xM-0-0-0-0-SV

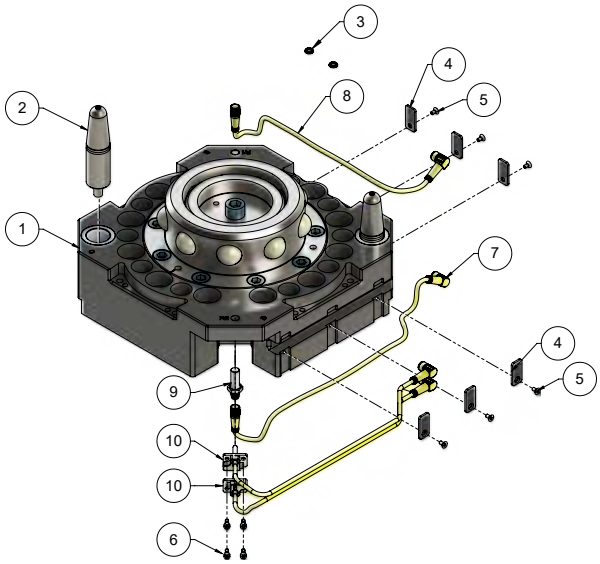

Table 6.2—QC-310 -SM, -SP, -SMA, -ST, SV Master Plates			
Item No.	**Qty**	**Part Number**	**Description**
1	1	9121-310AM-0-0-0-0-S0	Complete QC-310 Master plate, No Options
2	2	9005-20-1141	7/8” Two Piece Alignment Pin
3	2	3410-0001016-01	O-ring 1/16 x 1/8 I.D. x 1/4 O.D.
4	6	3700-20-4092	Large Cable Retaining Tab
5	6	3500-1258006-11	M3 x 6 mm Flat Head Socket Cap Screw Black Oxide
6	4	3500-1057006-15	M3 x 6 socket head cap screws, Class 12.9, Blue dyed Magni-565
9121-310xM-0-0-0-0-SM			
7	1	8590-9909999-69	LED Straight Snap to RA Screw Pico .33m
8	1	8590-9909999-70	LED Straight Snap to RA Screw, Pico, 0.4m
9	2	8590-9909999-34	PNP Proximity Sensor (RTL)
10	2	9005-20-2164	Lock/Unlock Sensor Assembly, QC-310 (PNP)
9121-310xM-0-0-0-0-SP			
7	1	8590-9909999-121	LED RA Screw to Straight Snap, .33m.
8	1	8590-9909999-122	LED RA Screw to Straight Snap, .4m.
9	2	8590-9909999-120	NPN Proximity Sensor (RTL)
10	2	9005-20-2165	Lock/Unlock Sensor Assembly, QC-310 (NPN)
9121-310xM-0-0-0-0-SMA			
10	2	9005-20-2164	Lock/Unlock Sensor Assembly, QC-310 (PNP)
9121-310xM-0-0-0-0-ST			
9	2	8590-9909999-34	PNP Proximity Sensor (RTL)
10	2	9005-20-1446	Lock/Unlock Carrier Assembly, QC-50
9121-310xM-0-0-0-0-SV			
7	1	8590-9909999-169	Cordset, Straight Snap to RA Screw Connection, Pico, 0.33m Length, NO LED
8	1	8590-9909999-197	Cordset, Straight Snap to RA Screw Connection, Pico, 0.4m Length, NO LED
9	2	8590-9909999-139	NAMUR 2-Wire Prox Sensor, 1.5mm Sensing Range, Quick Disconnect
10	2	9005-20-8653	Sensor Carrier Assembly, Double Screw, Prox, NAMUR, Hardwired, Connectorized, .627, Nitrile
Notes: x = A, B, C, D, E, or F for boss size designation.			

6.3 Tool Plate

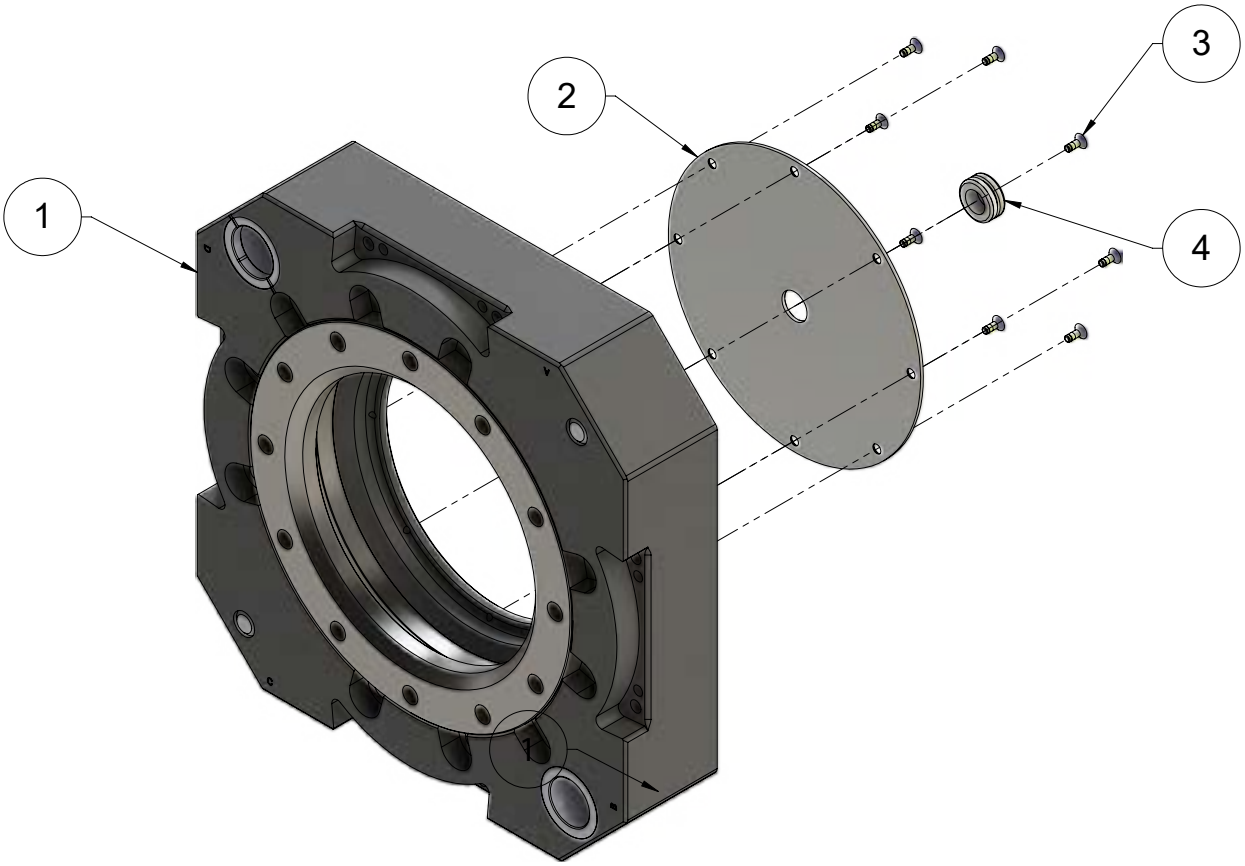

Table 6.3—Tool Plate			
Item No.	**Qty**	**Part Number**	**Description**
1	1	9121-310xT-0-0-0-0	QC-310 Base Tool Assembly, No Options, 125 mm Recess
2	1	9005-20-1334	Race Cover QC-310 Tool Assembly (Includes Items 3 and 4)
3	6	3500-1258008-15A	M3x8 Flat Head Socket Cap Screw, Class 10.9, Blue dyed Magni-565, ND Microspheres Epoxy, Yellow.
4	1	4010-0000020-01	Grommet C-30-SG-16A
Notes: x = A, B, C, D, E, or F for boss size designation.			

7. Specifications

Table 7.1—Master and Tool Specifications		
Recommended Max Payload	1120 lbs (500 kg)	The mass attached to the Tool Changer.
Operating Temperature Range	-20–150°F (-30–66°C)	Optimal temperature range for operation.
Operating Air Pressure Range	60–100 psi (4.1–6.9 bar)	Locking mechanism supply air pressure operating range. Supply to be clean, dry, and filtered to 40 micron or better.
Coupling Force @ 80 psi	8600 lbs. (38,000 N)	Axial holding force
Recommended Max Moment X-Y (Mxy) **Recommended Max Torque about Z (Mz)**	29100 in-lb (3290 Nm) 28000 in-lb (3164 Nm)	Maximum recommended working load for optimum performance of the Tool Changer. Maximum recommended working torque for optimum performance of the Tool Changer.
Positional Repeatability	0.0006” (0.015 mm)	Repeatability tested at rated load at one million cycles.
Weight (coupled, no access)	43 lbs (19.5 kg)	Master 28 lbs (12.7 kg) / Tool 15 lbs (6.8 kg)
Max. Recommended Distance between Master and Tool plate	0.10” (2.5 mm)	No-Touch locking technology allows the Master and Tool plates to lock with separation when coupling.
Sensor Information, Signal Name	L/U (Lock/Unlock) RTL (Ready-To-Lock)	Internal proximity sensors (2) with cable and connector for direct wiring to the control/ signal module to indicate locking mechanism position. Proximity sensors (2) with cable and connector for direct wiring to control/signal module to indicate Master and Tool mating surfaces within close proximity of each other.
Mounting/Customer Interface	Master plate Tool plate	Meets ISO 9409-1-A200 Meets ISO 9409-1-A200 Also Supports (6) Fasteners on ABB Super-ISO Pattern

8. Drawings

Drawings are available on the *ATI website* or by contacting an ATI representative.