Table of Contents

B. Base Tool Changer **B-3**

QC-46 Series—Robotic Tool Changer **B-3**

1. Product Overview **B-3**

- **1.1 Master Plate Assembly** **B-4**
- **1.2 Tool Plate Assembly** **B-5**
- **1.3 Optional Modules** **B-5**

2. Installation **B-6**

- **2.1 Master Interface** **B-8**
- **2.2 Master Plate Installation** **B-9**
- **2.3 Master Plate Removal** **B-10**
- **2.4 Tool Interface** **B-11**
- **2.5 Tool Plate Installation** **B-12**
- **2.6 Tool Plate Removal** **B-12**
- **2.7 Optional Module with J16 Pattern Installation** **B-13**
- **2.8 Optional Module with J16 Pattern Removal** **B-14**
- **2.9 Pneumatic Connections and Valve Requirements** **B-14**
  - 2.9.1 Valve Requirements and Connections for the Locking Mechanism B-14
- **2.10 Electrical Connections** **B-15**
  - 2.10.1 PNP Type Lock and Unlock Sensors B-15
  - 2.10.2 NPN Type Lock and Unlock Sensors B-15
  - 2.10.3 NAMUR Type Lock and Unlock Sensors B-16

3. Operation **B-17**

- **3.1 Conditions for Coupling** **B-18**
- **3.2 Fail-Safe Operation** **B-18**
- **3.3 Conditions for Uncoupling** **B-19**
- **3.4 Tool Identification** **B-19**
- **3.5 Tool Storage Considerations** **B-20**

4. Maintenance **B-21**

- **4.1 Preventive Maintenance** **B-22**
- **4.2 Cleaning and Lubrication of the Locking Mechanism and Alignment Pins** **B-23**
- **4.3 Pin Block Inspection and Cleaning** **B-26**

5. Troubleshooting and Service Procedures B-27

5.1 Troubleshooting Procedures B-27

5.2 Service Procedures B-28

5.2.1 Lock and Unlock Sensor Replacement B-28

5.2.2 Seal Inspection and Replacement.....B-30

5.2.3 Alignment Pin Replacement B-31

6. Serviceable Parts B-33

6.1 QC-46 Master Plates Serviceable Parts..... B-33

6.2 QC-46 Tool Plate Serviceable Parts..... B-34

7. Specifications B-35

8. Drawings B-36

B. Base Tool Changer

QC-46 Series—Robotic Tool Changer

1. Product Overview

ATI Tool Changers enhance the versatility of a robot by enabling the use of multiple customer tools, such as: grippers, vacuum cup tooling, pneumatic and electric motors, weld guns, and more.

The Tool Changer consists of a Master plate, which is attached to the robot arm, and a Tool plate, which is attached to customer tooling. When the robot picks up the customer tooling, a pneumatically-driven locking mechanism couples the two plates. The patented, fail-safe locking mechanism utilizes a multi-tapered cam with ball locking technology to ensure the Tool Changer does not uncouple if air pressure falls below 60 psi (4.1 bar) during operation.

The robot can be programmed to select the desired customer tooling by coupling the Master plate to the Tool plate. Electricity, fluid, and other forces of energy transfer to the customer tooling through optional modules that are attached to the Master and Tool plates. Refer to the ATI website for compatible modules or contact an ATI sales representative for more details.

For the most current product information and specifications on the QC-46 Series of Tool Changers, please visit the following page on the ATI website: *QC-46 Series*

1.1 Master Plate Assembly

The Master plate assembly includes the following features:

- an anodized aluminum body
- (1) hardened stainless-steel locking mechanism (the locking mechanism consists of a cam, a male coupling, and chrome-steel ball bearings)
- (2) hardened steel alignment pins
- (4) flats for mounting of optional modules with J16 mounting pattern. The J16 mounting pattern is (4) M4x0.7 threaded holes on an 18 mm high and 50 mm wide rectangular pattern and (2) alignment holes for dowel pins.
- a 100 mm Bolt Circle (BC) mounting pattern for mounting the Master plate to a robot arm or a robot interface plate (refer to *Section 8—Drawings* for mounting details)
- (2) threaded connections to supply air pressure for coupling and uncoupling the Tool Changer

Figure 1.1—Master Plate Assembly (9120-046AM-0-0-0-0-SB-E Shown)

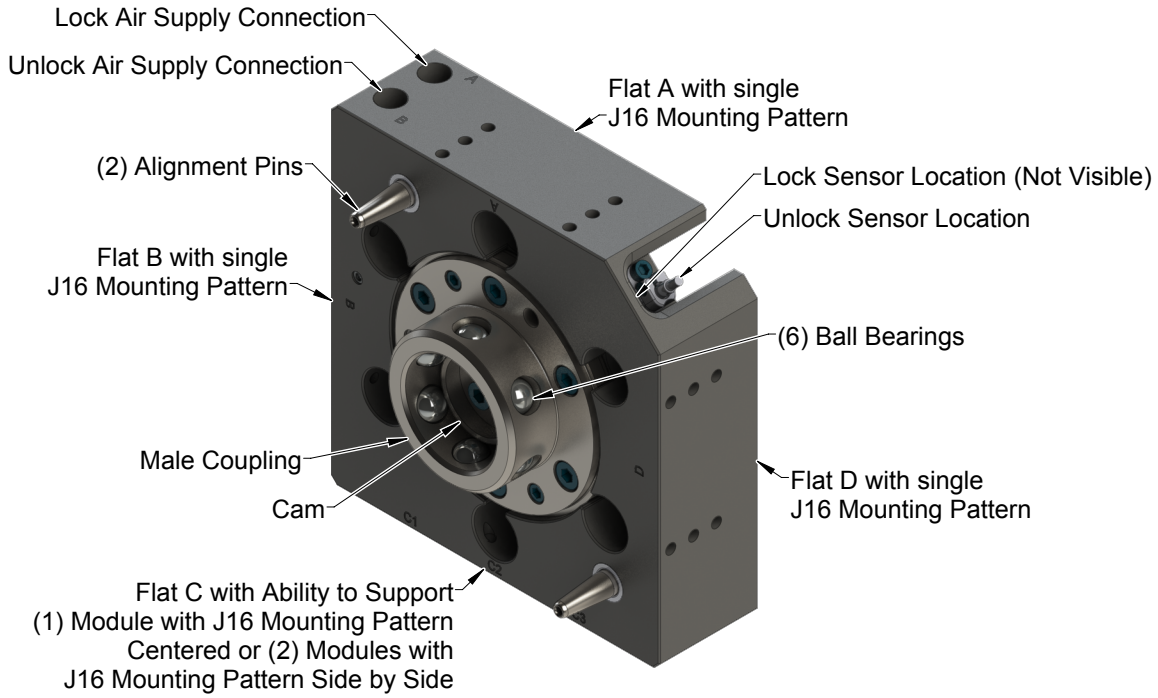

Tapered pins located mate with bushings in the Tool plate to ensure repeatable alignment during the coupling process. An extreme pressure grease is applied to the cam, male coupling, ball bearings, and pins to enhance performance and maximize the life of the Master plate assembly; refer to *Section 4.2—Cleaning and Lubrication of the Locking Mechanism and Alignment Pins*.

Proximity sensors detect Lock and Unlock positions of the locking mechanism. The sensors provide “lock” and “unlock” position signals to the customer’s process controller. These sensors can be ordered separately. PNP, NPN, and NAMUR sensors can be purchased from ATI. In hazardous work environments, use NAMUR sensors for proximity detection. For assistance in choosing the proper sensor for an application, contact an ATI Sales representative directly. The specifications for the sensors are in *Section 2.10—Electrical Connections*

1.2 Tool Plate Assembly

The Tool plate assembly includes the following features:

- an anodized aluminum body
- (1) hardened stainless-steel bearing race
- (4) flats for mounting of optional modules
- a 100 mm BC mounting pattern for direct customer tool mounting. Refer to *Section 8—Drawings* for mounting details.

Figure 1.2—Tool Plate Assembly

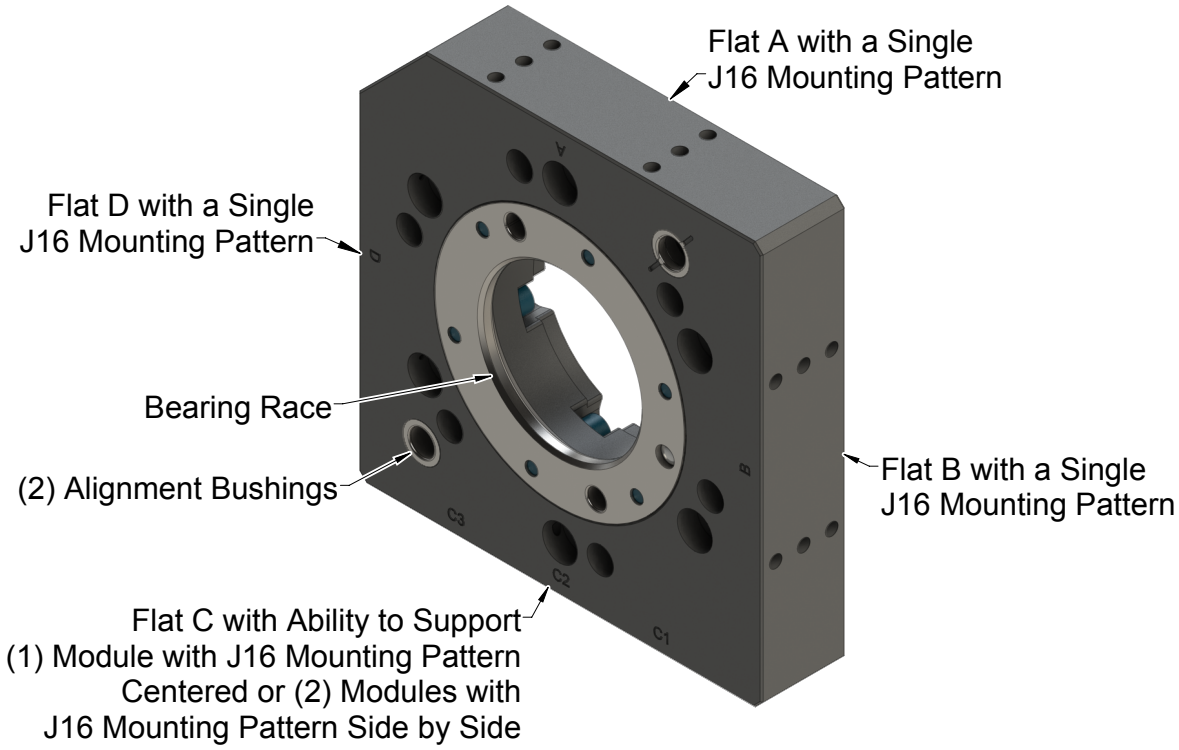

1.3 Optional Modules

There are (4) flats available on both the Master and Tool for mounting of the optional modules with a J16 pattern to support various utility pass through, such as signal, fluid/air, and electric.

For assistance in choosing the right modules for your particular application, visit the ATI website (*QC-46 Series*) or contact an ATI sales representative directly.

2. Installation

All fasteners used to mount the Tool Changer to the robot and to customer's tooling should be tightened to a torque value as indicated in *Table 2.1*.

WARNING: Do not perform maintenance or repair(s) on the Tool Changer or modules unless the Tool is safely supported or placed in the tool stand, all energized circuits (for example: electrical, air, water, etc.) are turned off, pressurized connections are purged and power is discharged from circuits in accordance with the customer specific safety practices and policies. Injury or equipment damage can occur with the Tool not placed and energized circuits on. Place the Tool in the tool stand, turn off and discharge all energized circuits, purge all pressurized connections, and verify all circuits are de-energized before performing maintenance or repair(s) on the Tool Changer or modules.

WARNING: Do not use lock washers under the head of the mounting fasteners or allow the mounting fasteners to protrude above the mating surfaces of the Master and Tool plates. Allowing fasteners to protrude above the mating surface will create a gap between the Master and Tool plates and not allow the locking mechanism to fully engage, this can cause damage to equipment or personal injury. The mounting fasteners must be flush or below the mating surfaces of the Master and Tool plates.

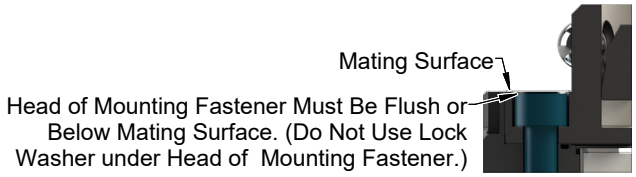

WARNING: All pneumatic fittings and tubing must be capable of withstanding the repetitive motions of the application without failing. The routing of electrical and pneumatic lines must minimize the possibility of over stressing, pullout, or kinking the lines. Failure to do so can cause critical electrical and/or pneumatic lines to malfunction and might result in injury to personnel or damage to equipment.

WARNING: Use all of the holes that are provided for mounting fasteners to secure the Tool Changer to the interface plate or robot. Using less than the mounting holes provides can cause the Tool Changer to come lose and may result in injury to personnel or damage to equipment.

CAUTION: Thread locker applied to fasteners must not be used more than once. Fasteners might become loose and cause equipment damage. Always apply new thread locker when reusing fasteners.

CAUTION: Do not use fasteners that exceed the thread depth in the Tool Changer. Refer to *Section 8—Drawings* for details on mounting hole thread depth. Secure the Tool Changer with the proper length fasteners. This is true for both robot and tool interfaces.

Table 2.1—Fastener Size, Class, and Torque Specifications			
Mounting conditions	**Fastener Size & Property Class**	**Recommended Torque**	**Thread Locker**
Master plate to interface plate (6061-T6 aluminum) Minimum thread engagement of 0.47” (12 mm) [1.5X fastener Ø]. Confirm available engagement with the robot manufacturer.	M8-1.25 Class 12.9	20 ft-lbs (27 Nm)	Loctite® 242
Master plate to interface plate (6061-T6 aluminum) Minimum thread engagement of 0.59” (15 mm) [1.5X fastener Ø]. Confirm available engagement with the robot manufacturer.	M10-1.5 Class 12.9	55 ft-lbs (75 Nm)	
Tool plate (6061-T6 aluminum) to interface plate (6061-T6 aluminum) Minimum thread engagement of 0.47” (12 mm) [1.5X fastener Ø].	M8-1.25 Class 12.9	20 ft-lbs (27 Nm)	
Tool plate (6061-T6 aluminum) to interface plate (6061-T6 aluminum) Minimum thread engagement of 0.59” (15 mm) [1.5X fastener Ø].	M10-1.5 Class 12.9	55 ft-lbs (75 Nm)	
Optional Module or adapter plate to the Master or Tool plate.	M4 x 0.7 Class 12.9		Loctite® 222
	Socket head cap	15 in-lbs (1.69 Nm)	
	Socket flat head cap	10 in-lbs (1.13 Nm)	

2.1 Master Interface

The Master plate is typically attached to the robot arm. An interface plate can adapt the Master plate to a specific robot arm. Alignment features (dowel holes and bosses) accurately position and bolt holes secure the Master plate to the robot arm or an interface plate. Custom interface plates are available from ATI upon request (refer to the drawings for technical information on mounting features.)

CAUTION: Do not use more than two alignment features when securing a Master plate to an interface plate. Using more than two alignment features can cause damage to equipment. Use either two dowel pins or a single dowel pin, along with a boss/recess feature to align the Master plate with the interface plate.

CAUTION: Do not use dowel pins that are too long or do not allow the interface plate and Master body to mate flush. Using dowel pins that are too long will cause a gap between the interface plate and Master body and damage the equipment. Use dowel pins that will not extend further than allowed by the Master body.

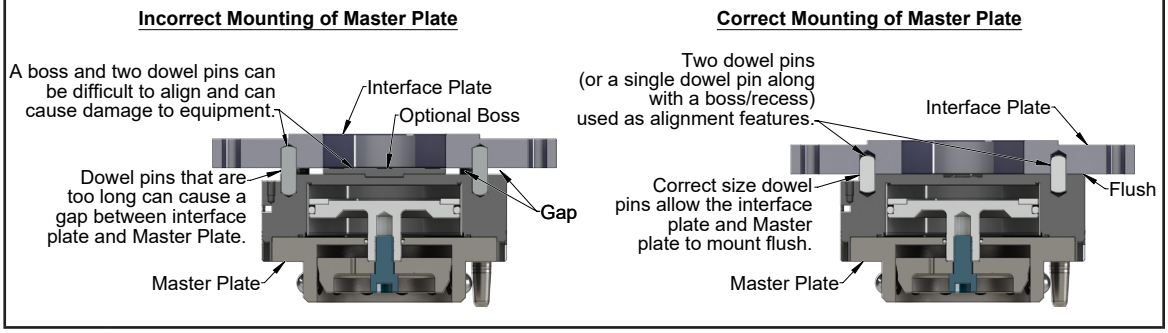

If the customer chooses to design and build an interface plate, consider the following points:

- The interface plate should include bolt holes for mounting and either two dowel pins or a dowel pin and a boss for accurate positioning on the robot and Master plate. The dowel and boss features prevent unwanted rotation. Refer to the robot manual for robot mounting features.
- The thickness of the interface plate must be sufficient to provide the necessary thread engagement for the mounting bolts.
- Dowel pins must not extend out from the surface of the interface plate farther than the depth of the dowel holes in the Master plate.
- If a boss is used on the Master plate, a recess of proper depth and diameter must be machined into the interface plate to correspond with the boss on the Master plate.
- Mounting bolts that are too long can create a gap between the interface plate and the Master plate, which can damage equipment.
- The interface plate must provide rigid mounting to the Master plate.
- The interface plate design must account for clearances required for Tool Changer module attachments and accessories.

2.2 Master Plate Installation

The customer can purchase from ATI fastener kits that contain hardware to mount the Master plate, refer to *Section 8—Drawings*.

Tools required: *6 mm or 8 mm hex key, toque wrench*

Supplies required: *Clean rag, Loctite 242*

1. Wipe down the mounting surfaces with a clean rag.
2. Install the Master plate to the robot arm or interface plate:
   a. Apply Loctite 242 to the threads of the fasteners.
   b. Align the Master plate to the robot arm or interface plate.
   c. Use either a 6 mm hex key, to secure the Master plate with (6) M8 socket head cap screws and precision washers, or use an 8 mm hex key to secure the Master plate with (6) M10 socket head cap screws (refer to *Table 2.1* for the proper torque)

NOTICE: If an interface plate is purchased from ATI, fasteners to mount the Master plate to the interface plate are supplied by ATI.

3. Connect the Lock and Unlock sensor connections (refer to *Section 2.10—Electrical Connections*)
4. Connect utilities to the appropriate module and Master plate connections. For lock and unlock air, refer to *Section 2.9—Pneumatic Connections and Valve Requirements*.
5. Safely resume normal operation.

Figure 2.1—Master Plate Installation

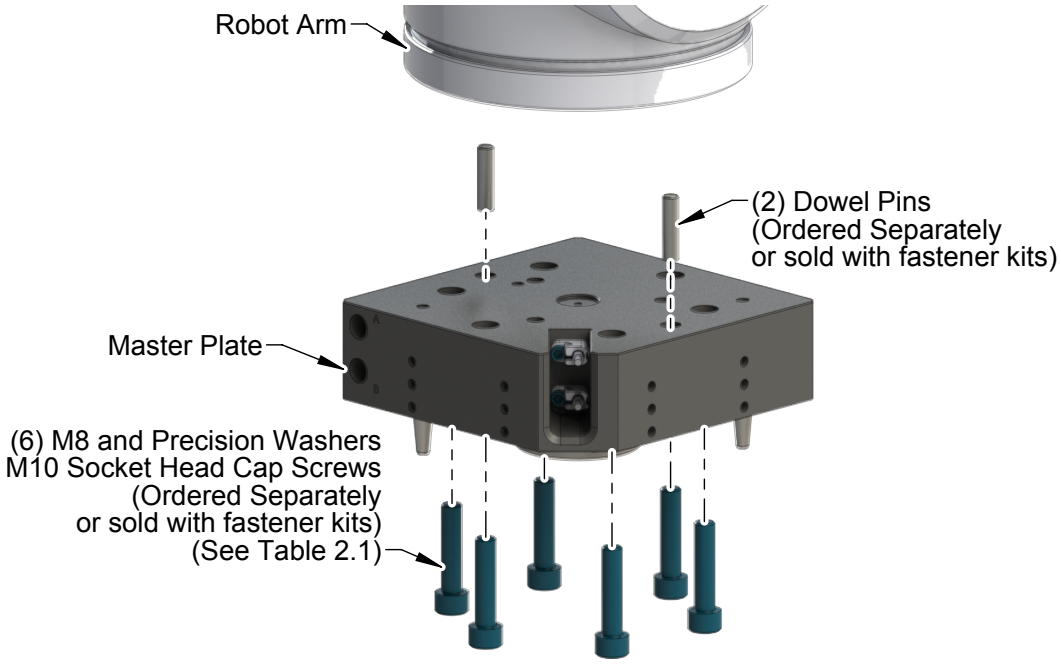

2.3 Master Plate Removal

Refer to *Figure 2.1.*

Tools required: *6 mm or 8 mm hex key*

1. Place the Tool in a secure location.
2. Uncouple the Master and Tool plates.
3. De-energize all energized circuits (for example: electrical, pneumatic, and hydraulic).
4. Disconnect the Lock and Unlock sensor connections.
5. Disconnect all utilities (for example: electrical, pneumatic, and hydraulic).

NOTICE: Support the Master plate while removing the fasteners.

6. Using a 6 mm or 8 mm hex key, remove the customer supplied (6) M8 with precision washers or (6) M10 socket head cap screws connecting the Master plate to the robot arm or interface plate.
7. Remove the Master plate.

2.4 Tool Interface

The Tool plate is attached to the customer's tooling. An interface plate can adapt the Tool plate to customer tooling. Alignment features (dowel holes and a recess) accurately position and bolt holes to secure the Tool plate to customer tooling. Custom interface plates can be supplied by ATI (refer to the application drawing).

CAUTION: Do not use more than two alignment features when securing a Tool plate to an interface plate. Using more than two alignment features can cause damage to equipment. Use either two dowel pins or a single dowel pin, along with a boss/recess feature to align the Tool plate with the interface plate.

CAUTION: Do not use dowel pins that are too long or do not allow the interface plate and Tool body to mate flush. Using dowel pins that are too long will cause a gap between the interface plate and Tool body and damage the equipment. Use dowel pins that will not extend further than allowed by the Tool body.

Incorrect Mounting of Tool Plate

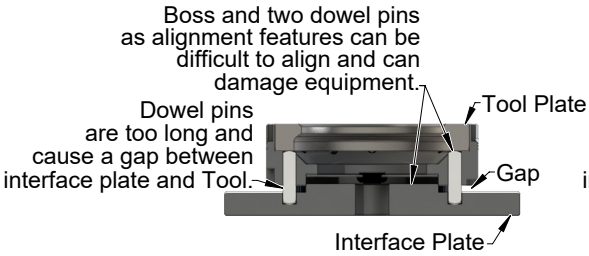

Correct Mounting of Tool Plate

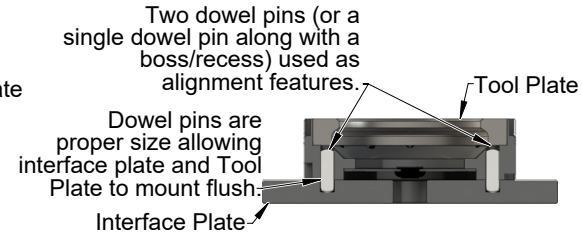

If the customer chooses to design and build a tool interface plate, consider the following points:

- The interface plate should include bolt holes for mounting and either two dowel pins or a dowel pin and a boss for accurate positioning on the customer tooling and Tool plate. The dowel and boss features prevent unwanted rotation.
- Dowel pins must not extend out from the surface of the interface plate farther than the depth of the dowel holes in the Tool plate.
- The thickness of the interface plate must be sufficient to provide the necessary thread engagement for the mounting bolts. Fasteners should meet minimum recommended engagement lengths while not exceeding the maximum available thread depth. Use of bolts that are too long can cause damage to the tool side changer.
- The plate design must account for clearances required for Tool Changer module attachments and accessories.
- If a boss is to be used on the interface plate, a boss of proper height and diameter must be machined into the interface plate to correspond with the recess in the Tool plate.
- The interface plate must have a hole in its center for manually returning the locking mechanism to the unlocked position under adverse conditions (i.e. unintended loss of power and/or air pressure). The center access hole with a minimum diameter of 1" (25.4 mm) prevents debris from contaminating the locking mechanism. Greater protection is provided by leaving the race cover and grommet in place.

2.5 Tool Plate Installation

Tools required: *6 mm or 8 mm hex key, toque wrench*

Supplies required: *Clean rag, Loctite 242*

1. Wipe down the mounting surfaces with a clean rag.

NOTICE: If an interface plate is purchased from ATI, fasteners to mount the Tool plate to the interface plate are supplied by ATI.

2. Install the Tool plate to the customer tooling or an interface plate:
   a. Apply Loctite 242 to the threads of the fasteners.
   b. Align the Tool plate to the customer tooling or Tool interface plate.
   c. Use either a 6 mm hex key, to secure the Tool plate with (6) M8 socket head cap screws, or use an 8 mm hex key to secure the Tool plate with (6) M10 socket head cap screws (refer to *Table 2.1* for the proper torque)
3. Connect utilities to the module connections.
4. Safely resume normal operation.

Figure 2.2—Tool Plate Installation

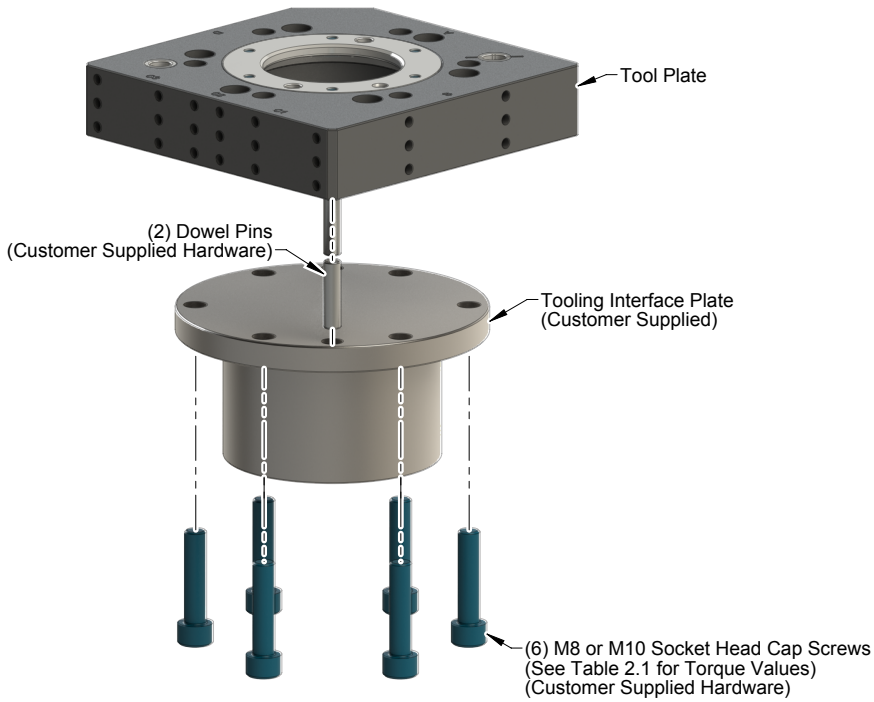

2.6 Tool Plate Removal

Tools required: *6 mm or 8 mm hex key*

1. Place the Tool in a secure location.
2. Uncouple the Master and Tool plates.
3. De-energize all energized circuits (for example: electrical, pneumatic, and hydraulic).
4. Disconnect all utilities (for example: electrical, pneumatic, and hydraulic).
5. Use a 6 mm or 8 mm hex key to remove the (6) M8 or M10 socket head cap screws that connect the Tool plate to the tooling or tool interface plate.
6. Remove the Tool plate.

2.7 Optional Module with J16 Pattern Installation

Tools required: *3 mm hex key, toque wrench*

Supplies required: *Clean rag, Loctite 222*

1. Place the Tool in a secure location.
2. Uncouple the Master and Tool plates.
3. De-energize all energized circuits (for example: electrical, pneumatic, and hydraulic).
4. Wipe down the mounting surfaces with a clean rag.
5. Install the module on the flat of the Master or Tool plate:
   a. Align the module on the flat.
   b. Apply Loctite 222 to (4) M4 socket head cap screws.
   c. Use a 3 mm hex key to secure the module to the flat with the (4) M4 socket head cap screws. Refer to *Table 3.1* for torque specifications.
6. Remove all protective caps, plugs, and tape from the module prior to operation.
7. Safely resume normal operation.

Figure 2.3—Optional Module Installation

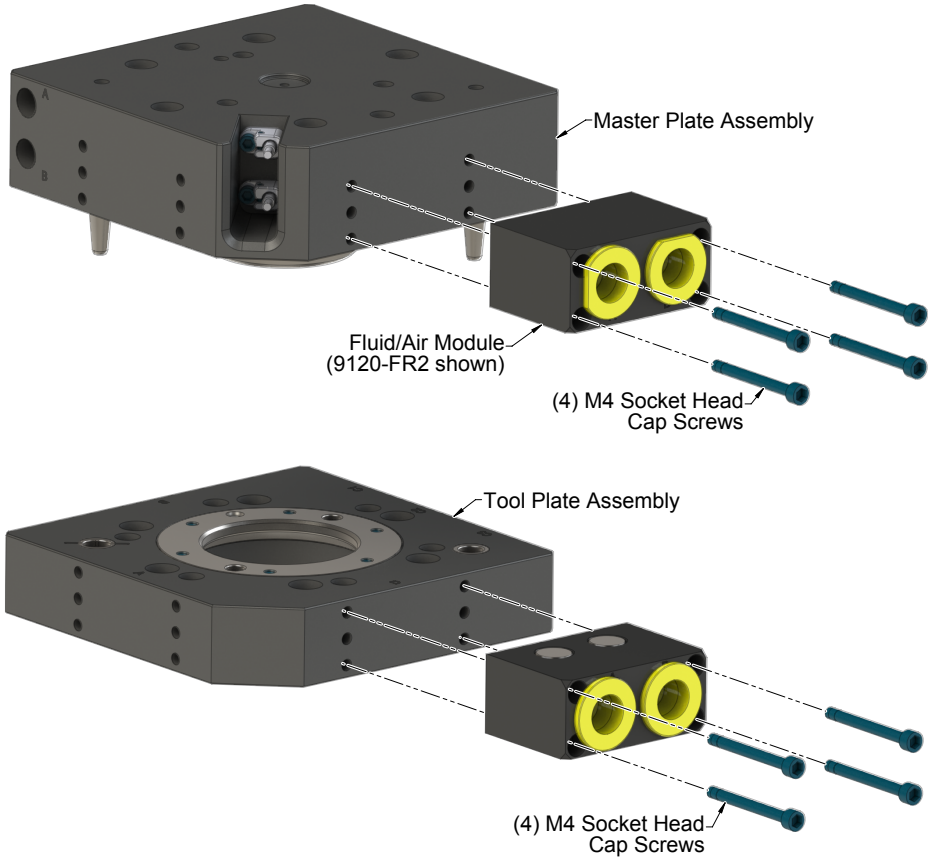

2.8 Optional Module with J16 Pattern Removal

Refer to *Figure 2.3*.

Tools required: *3 mm hex key*

1. Place the Tool in a secure location.
2. Uncouple the Master and Tool plates.
3. De-energize all energized circuits (for example: electrical, pneumatic, and hydraulic).
4. Disconnect any cables, air line, etc.
5. With the module supported, use a 3 mm hex key to remove the (4) M4 socket head cap screws.
6. Remove the module.

2.9 Pneumatic Connections and Valve Requirements

Proper operation of the locking mechanism requires a constant supply of clean, dry, non-lubricated air, with the following conditions:

- Pressure range of 60 to 100 psi (4.1 - 6.9 bar) Suggested 80 psi
- Filtered minimum: 40 microns

To lock or unlock the Tool Changer, a constant supply of compressed air is required. If there is a loss of air pressure in the locked state, the cam profile prevents the master plate and tool plate from unlocking, and the Tool Changer goes into the fail-safe condition.

CAUTION: Do not use the Tool Changer in a fail-safe condition. Damage to the locking mechanism can occur. Re-establish air pressure and ensure the Tool Changer is in a secure lock position before returning to normal operations.

2.9.1 Valve Requirements and Connections for the Locking Mechanism

A customer supplied 2-position 4-way or 5-way valve with either 4-port or 5-port configuration must be used to actuate the locking mechanism in the Master plate. It is imperative that when air is supplied to the Lock or Unlock Port on the Master plate, that the opposite port be vented to atmosphere (for example: when air is supplied to the Lock Port, the Unlock Port must be open to the atmosphere.) Failure to vent trapped air or vacuum on the inactive port may inhibit operation of the locking mechanism and prevent coupling or uncoupling.

CAUTION: The locking mechanism will not function properly when connected to a 3-way valve as this type of valve is incapable of venting trapped air or vacuum from within the Tool Changer. This could result in damage to the product, attached tooling, or injury to personnel. Connect the Lock and Unlock supply air to a 2-position 4-way or 5-way valve with either 4-port or 5-port configuration.

Figure 2.4—Lock and Unlock Pneumatic Connections

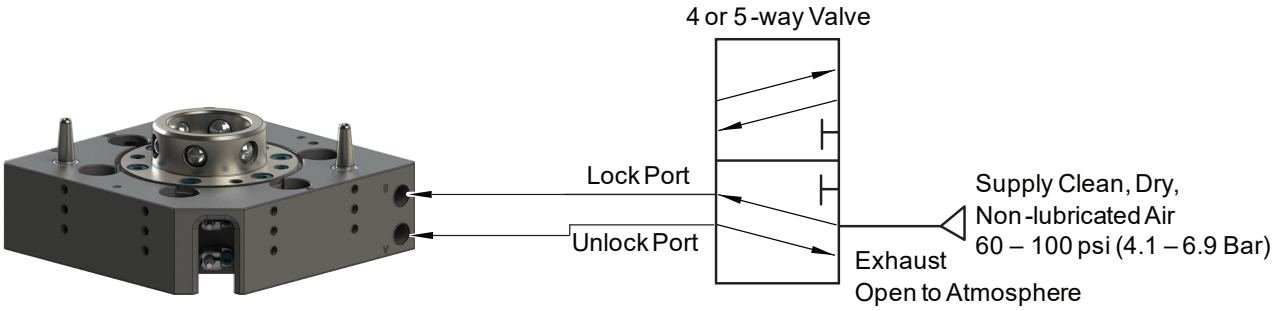

2.10 Electrical Connections

The Tool Changer has integrated lock/unlock sensors. If sensors are not used, ATI provides plugs to seal the locking mechanism.

2.10.1 PNP Type Lock and Unlock Sensors

These sensors are used on 9120-046AM-0-0-0-000-SB-(E) and 9120-046AM-0-0-000-0-SM-(E).

Table 2.2—PNP (Current Sourcing)	
Description	**Value**
Voltage Supply Range	10-30VDC
Output Circuit	PNP make function (NO)

Figure 2.5—PNP Type Lock, Unlock and RTL Sensors

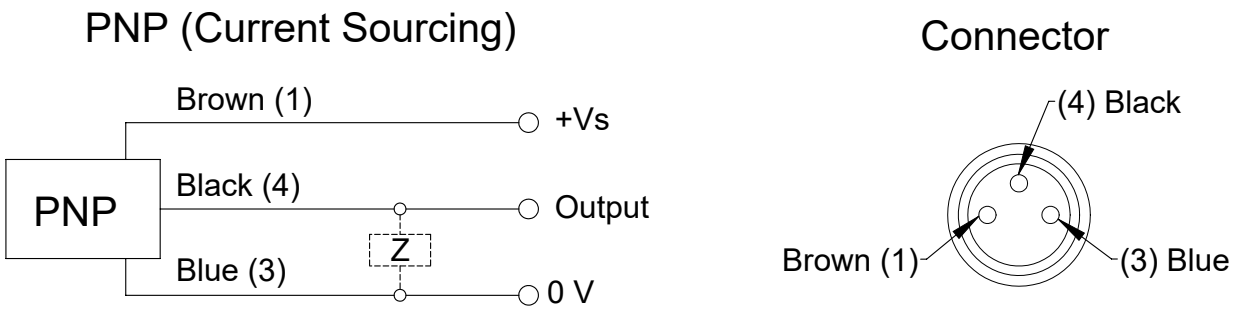

2.10.2 NPN Type Lock and Unlock Sensors

These sensors are used on 9120-046AM-0-0-0-000-SA-(E) and 9120-046AM-0-0-000-0-SP-(E).

Table 2.3—NPN (Current Sinking)	
Description	**Value**
Voltage Supply Range	10-30VDC
Output Circuit	NPN make function (NO)

Figure 2.6—NPN Type Lock, Unlock and RTL Sensors

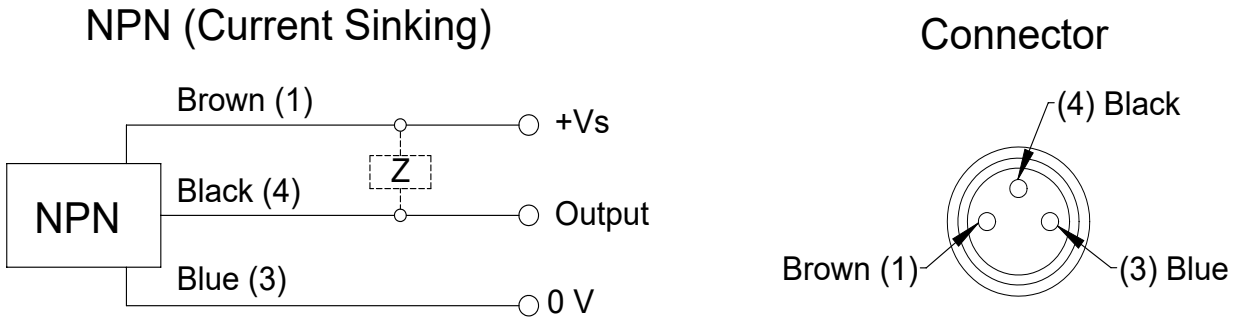

2.10.3 NAMUR Type Lock and Unlock Sensors

These sensors are used on 9120-046AM-0-0-000-0-SV-(E).

Table 2.4—NAMUR Sensor

Description	Value
Voltage Supply Range	5-30VDC
Operating Current	Remote
Non-Actuated Current Consumption	≥ 2.1 mA
Actuated Current Consumption	≤ 1.2 mA
Nominal Sensing Distance Sn	1.0 mm
Output Circuit	2-Wire DC NAMUR

Figure 2.7—NAMUR Type Lock and Unlock Sensors

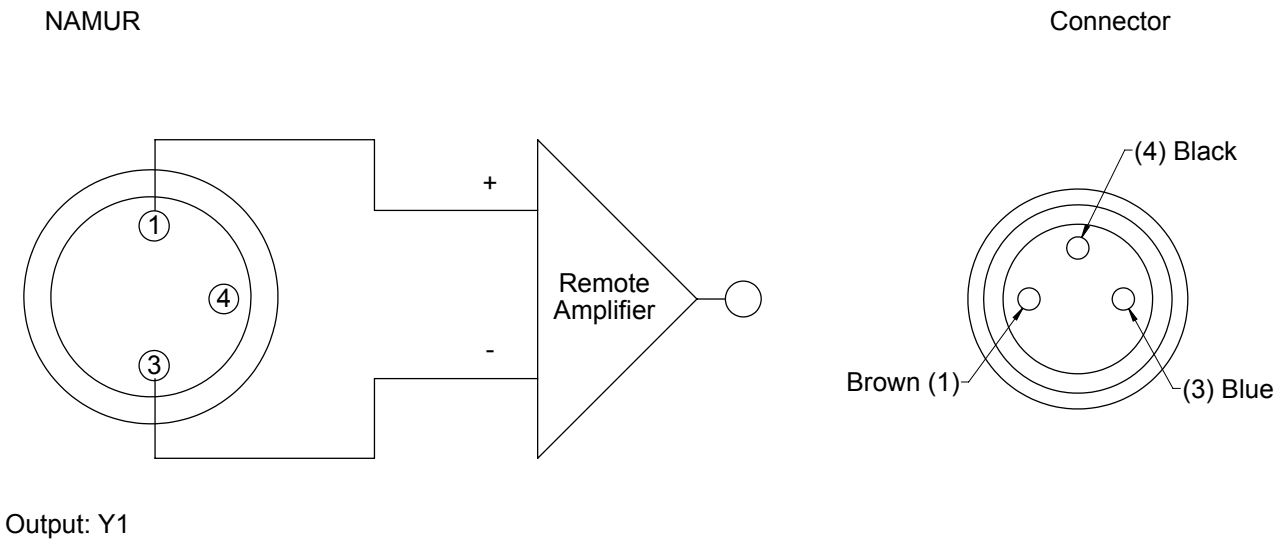

3. Operation

The Master plate locking mechanism is pneumatically driven to couple and uncouple with the Tool plate bearing race.

CAUTION: Operation of the Tool Changer is dependent on maintaining an air pressure of 60 to 100 psi (4.1 - 6.9 bar). Damage to the locking mechanism could occur. Robot motion must be halted if the air supply pressure drops below 60 psi (4.1 bar).

NOTICE: All Tool Changers are lubricated prior to shipment. The customer must apply additional lubricant to the locking mechanism components and alignment pins prior to operation. Tubes of lubricant for this purpose are shipped with every Tool Changer. Standard Tool Changers require MobilGrease XHP222 Special (a NLGI #2 lithium complex grease with molybdenum disulfide). For custom applications, such as food grade or surgical applications, specialized lubricants might be required.

Coupling should occur with the Master plate in the No-Touch™ locking zone. As coupling occurs, the Master plate should pull the Tool plate into the locked position.

Program the robot to minimize misalignment during coupling and uncoupling. Greater offsets can be accommodated by the Master and Tool plates but will increase wear. Misalignments can be caused by improper tool stand design. Refer to Tool Storage Considerations section.

Figure 3.1—Offset Definitions

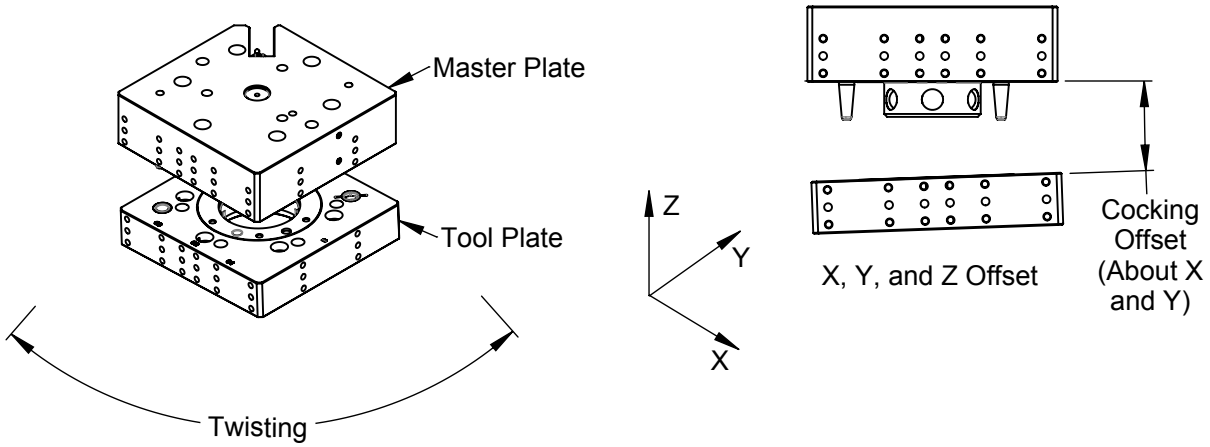

Table 3.1—Maximum Recommended Offsets Prior to Coupling				
Model	**No-Touch Zone Z Offset (Max)[1]**	**X and Y Offset (Max)[2]**	**Cocking Offset (Max)**	**Twisting Offset (Max)**
QC-46	0.1” (2.5 mm)	±0.06” (1.5 mm)	±1°	±2°

Notes:
1. Maximum values shown. Decreasing actual values will minimize wear during coupling/uncoupling.
2. Actual allowable values may be higher in some cases but higher offsets will increase wear during coupling.

3.1 Conditions for Coupling

CAUTION: The locking mechanism must be in the unlock position when attempting to couple the Tool Changer. Failure to adhere to this condition may result in damage to the unit and/or the robot.

1. Position the Master plate above the Tool plate with the air supplied to the Unlock Port (if equipped, the Unlock sensor indicates the Tool Changer is Unlocked).
2. Move the Master plate toward the Tool plate so that the (2) alignment pins enter the alignment holes on the opposite plate. Program the robot so that the Master plate and Tool plate are aligned axially and are parallel to each other (as closely as possible). This will minimize Tool movement and subsequent wear during lock-up.

CAUTION: No-Touch™ locking technology allows the unit to couple with a separation distance between the Master and Tool. Direct contact of the Master and Tool mating surfaces is not suggested or required prior to coupling. Contact may result in damage to the unit and/or the robot.

3. When the (2) faces are within the specified No-Touch™ distance, release the pressure from the Unlock port and supply air to the Lock port. The Tool plate is drawn toward the Master plate and coupled. Air must be maintained on the Lock Port during operation to assure rigid coupling (if equipped, the Lock sensor indicates the Tool Changer is in the Locked position).
4. A sufficient delay must be programmed between locking valve actuation and robot motion so that the locking process is complete before moving the robot.

CAUTION: If air pressure is lost during operation, ATI's patented fail-safe design prevents the Tool plate from being released. Do not use the Tool Changer in a fail-safe condition. Re-establish air pressure and ensure the Tool Changer is in a secure lock position before returning to normal operations.

3.2 Fail-Safe Operation

A fail-safe condition occurs when there is an unintended loss of lock air pressure to the Master plate. When air pressure is lost, the Tool Changer relaxes and there may be a slight separation between the Master and Tool plates. The lock sensor may indicate that the unit is not locked. ATI's patented fail-safe feature utilizes a multi-tapered cam to trap the ball bearings and prevent an unintended release of the Tool plate. Positional accuracy of the tooling is not maintained during this fail-safe condition. Do not operate the Tool Changer in the fail-safe condition. If source air is lost to the unit, movement should be halted until air pressure is restored.

After air pressure is re-established to the Master plate, the locking mechanism will energize and securely lock the Master and Tool plates together. In some cases when the load on the tool changer is significantly off center, it may be necessary to position the load underneath the tool changer or return the tool to the tool storage location to ensure a secure lock condition. If equipped, make sure the lock sensor indicates the Tool Changer is in the locked position before resuming normal operations. Consult your Control/Signal Module Manual for specific error recovery information.

CAUTION: Do not use the Tool Changer in a fail-safe condition. Damage to the locking mechanism could occur. Re-establish air pressure and ensure the Tool Changer is in a secure lock position before returning to normal operations.

3.3 Conditions for Uncoupling

1. Position the Tool plate in the tool stand so that there is little or no contact force between the Tool plate and tool stand.
2. Release air on the Lock port and apply air to the Unlock Port (if equipped, the Unlock sensor will indicate the Tool Changer is in the Unlocked position).

NOTICE: The air will cause the locking mechanism to be released and the weight of the Tool plate and attached tooling will assist in its removal. The Tool weight assists in uncoupling if the Tool is released in the vertical position only.

3. A sufficient delay must be programmed between unlocking valve actuation and robot motion, so that the unlocking process is complete and the Tool plate is fully released before moving the robot.
4. Move the Master plate axially away from the Tool plate.
5. In automated Tool change applications, it is recommended that a Tool presence sensor(s) be used in the tool stand to verify that the Tool is present and that the Tool remains in place as the robot moves away after the unlocking process.

3.4 Tool Identification

When using multiple Tools, it is good practice to implement a Tool-ID system that identifies each Tool with a unique code. Tool-ID can be used to verify that the robot has picked up the proper Tool. Modules with Tool-ID are available for purchase through the ATI website. Go to *http://www.ati-ia.com/products/toolchanger/tool_changer_modules.aspx* for products available or contact ATI for assistance.

3.5 Tool Storage Considerations

NOTICE: Tool stand design is critical to the operation of the Tool Changer. Improperly designed tool stands can cause jamming and excessive wear of the Tool Changer components.

Tool plates with customer tooling attached may be stored in a tool stand. ATI provides compatible tool stands designed for durability, longevity, and maximum adaptability to fit most customers' applications. The ATI Tool Stand Medium (TSM) system is compatible with ATI Tool Changer sizes QC-50 to QC-110. The TSM systems can be configured in a variety of arrangements and are available with additional modular accessories such as covers and tool sensing. For products available, contact an ATI representative or refer to the following ATI webpage: *https://www.ati-ia.com/products/toolchanger/toolstand/medium/MediumStand.aspx*. Another resource is the *ATI TSM manual*: *https://www.ati-ia.com/App_Content/Documents/9610-20-1114.pdf*.

For some Tool Changers, ATI can provide a Teaching Aid to assist users with teaching the robot how to couple the Master with the Tool in a tool stand. For more information, refer to the *ATI Teaching Aid manual* or the ATI webpage for Teaching Aids: *https://www.ati-ia.com/products/toolchanger/TeachingAid.aspx*.

If the customer supplies the tool stand, the tool stand should include the following design considerations:

- Provide a fixed, repeatable, level, and stable position for tool pick-up and drop-off.
- Support the weight of the Tool Changer Tool plate, tool interface plate, optional modules, cables, hoses, and customer tooling without allowing deflection in excess of the offsets specified.
- (Preferred) the Tool should hang vertically in the tool stand so that gravity assists to uncouple the Tool plate from the Master plate during unlocking.
- It is possible to design tool stands that hold tools in the horizontal position, but the necessary compliance must be provided during coupling and uncoupling. In general, horizontally positioned tool stands cause more wear on the locking mechanism and locating features of the Tool Changer and tool stand. Furthermore, horizontal pick-up and drop-off of the Tool plate increases wear on the robot arm.
- A variety of methods may be used to position the Tool in the tool stand. A common method is to use tapered alignment pins and bushings. Robot programming and positional repeatability are critical aspects of successful Tool pick-up and drop-off.
- Install a debris shield to cover Tools and modules to protect them in dirty environments, such as grinding or welding. Alternatively, position tool stands in areas that are shielded from weld spatter, fluids, adhesives, or other debris.
- For proximity sensors, consider the following:
    - Install a proximity sensor that detects the presence of the Tool in the tool stand. The sensor may be used prior to coupling to ensure the Tool is seated in the stand. Sensors may also be used as the robot starts to move away after uncoupling. Sensors provide a safety measure if a Tool becomes jammed in the stand or if the Tool fails to release from the robot.
    - Position the proximity sensor so that the sensing face is vertical to prevent metal shavings, weld spatter, or other debris from falling on the sensor and creating false readings.

4. Maintenance

WARNING: Do not perform maintenance or repair(s) on the Tool Changer or modules unless the Tool is safely supported or placed in the tool stand, all energized circuits (for example: electrical, air, water, etc.) are turned off, pressurized connections are purged and power is discharged from circuits in accordance with the customer specific safety practices and policies. Injury or equipment damage can occur with the Tool not placed and energized circuits on. Place the Tool in the tool stand, turn off and discharge all energized circuits, purge all pressurized connections, and verify all circuits are de-energized before performing maintenance or repair(s) on the Tool Changer or modules.

NOTICE: The cleanliness of the work environment strongly influences the trouble free operation of the Tool Changer. The dirtier the environment, the greater the need for protection against debris. Protection of the entire EOAT, the Master, the Tool and all of the modules may be necessary. Protective measures include the following:

1) Placement of tool stands away from debris generators.
2) Covers incorporated into the tool stands.
3) Guards, deflectors, air curtains, and similar devices built into the EOAT and the tool stand.

4.1 Preventive Maintenance

With regular maintenance, the Tool Changer and optional modules have a long life. A visual inspection and preventive maintenance schedule is provided in the following table: Detailed assembly drawings are provided in *Section 8—Drawings* of this manual. Refer to the module manual for detailed preventive maintenance steps for all utility modules.

Table 4.1—Maintenance Schedule

Application(s)	Tool Change Frequency	Inspection Schedule
General Usage Material Handling Docking Station	> 1 per minute	Weekly
	< 1 per minute	Monthly
Welding/Servo/Deburring, Foundry Operations (Dirty Environments)	All	Weekly

Checklist

Balls/Alignment Pins/Holes/Bearing Race

- ☐ Inspect for lubrication and wear. MobilGrease® XHP222 Special a NLGI #2 lithium complex grease with molybdenum disulfide additive is suggested for locking mechanism and alignment pin lubrication. Over time, lubricants can become contaminated with process debris; therefore, remove the existing grease on the components and replace with new grease. See *Section 4.2—Cleaning and Lubrication of the Locking Mechanism and Alignment Pins*.
- ☐ Inspect pin and bushing for excessive wear, which may be an indication of poor robot position during pickup/drop-off. Adjust robot position as needed. Check tool stand for wear and alignment problems. Replace worn alignment pins, refer to *Section 5.2.3—Alignment Pin Replacement*.
- ☐ Inspect for wear on the balls/bearing race. Wear could be an indication of excessive loading.

Mounting Fasteners/Interface Connections

- ☐ Inspect fasteners for proper torque, interference, or wear. Tighten and correct as required. Refer to *Section 2—Installation*.

Sensors and Cables

- ☐ Inspect sensor cables and connectors for any damage, cuts, and abrasion. *Section 5.2.1—Lock and Unlock Sensor Replacement*.

Seals (Optional Modules)

- ☐ Inspect seals for wear, abrasion, and cuts. Replace seals as needed. Refer to *Section 5.2.2—Seal Inspection and Replacement.*

Electrical Contacts/Pin Block (Optional Modules)

- ☐ Inspect for damage, debris, and stuck/burnt pins. Clean the pin blocks as required. Refer to *Section 4.3—Pin Block Inspection and Cleaning.*

4.2 Cleaning and Lubrication of the Locking Mechanism and Alignment Pins

Supplies required: *Clean rag, MobilGrease® XHP222 Special Grease*

1. Place the Tool in a secure location.
2. Uncouple the Master and Tool plates.
3. Turn off and de-energize all energized circuits (for example: electrical, pneumatic, and hydraulic circuits).
4. Use a clean rag to thoroughly remove any lubricant and debris from the ball bearings, male coupling, cam, and alignment pins.

Figure 4.1—Cleaning Ball Bearings and Outer Surfaces of Male Coupling

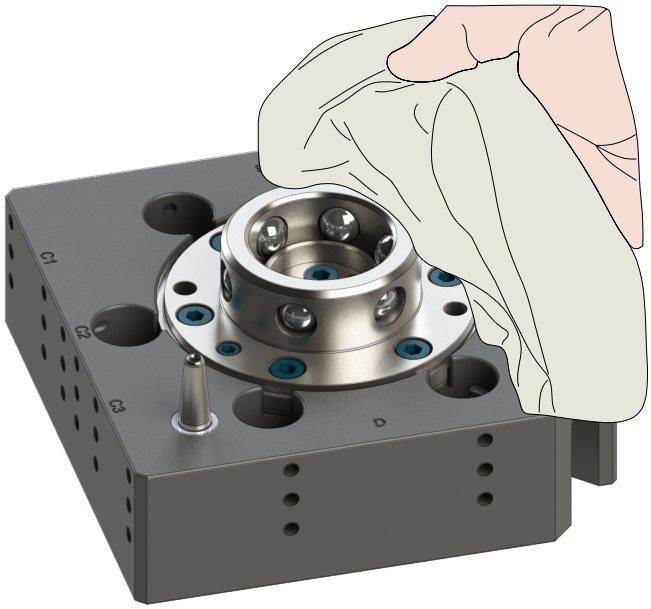

5. Use a clean rag to thoroughly remove any lubricant and debris from the inner surface of the male coupling and cam.

Figure 4.2—Cleaning Ball Bearings, Cam and Inner Surfaces of Male Coupling

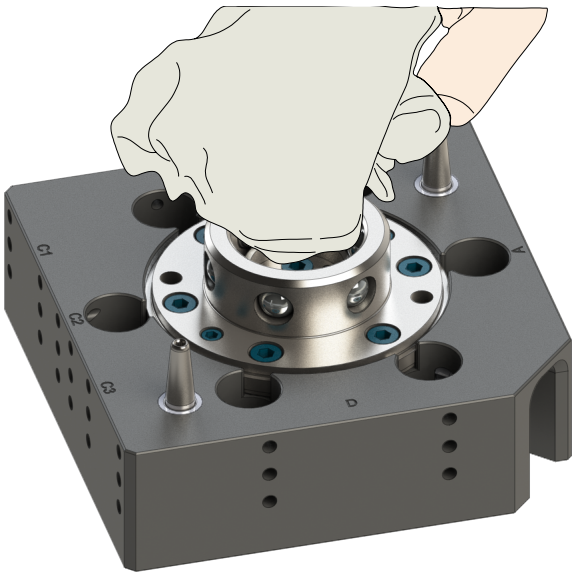

6. Check each ball bearing to make sure it moves freely in the male coupling. Additional cleaning may be necessary to free up any ball bearings that are sticking in place.

Figure 4.3—Check Ball Bearing Movement

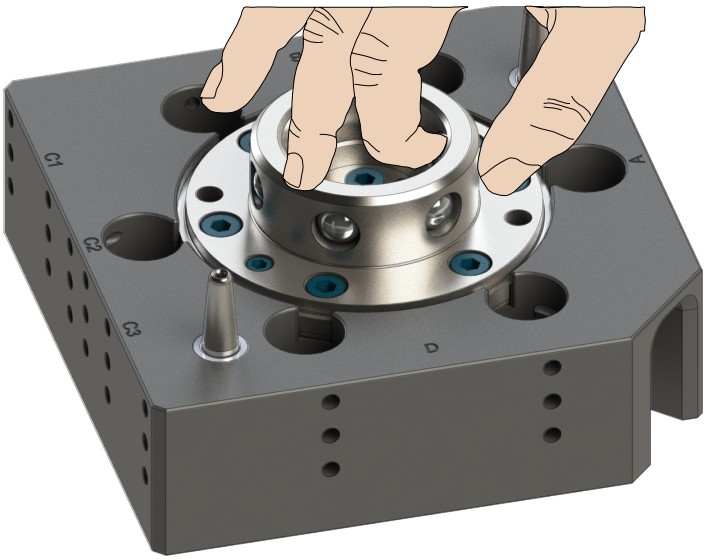

7. Apply a liberal coating of lubricant to the ball bearings, the male coupling (inside and out), and the alignment pins.

Figure 4.4—Apply Lubricant to Locking Mechanism

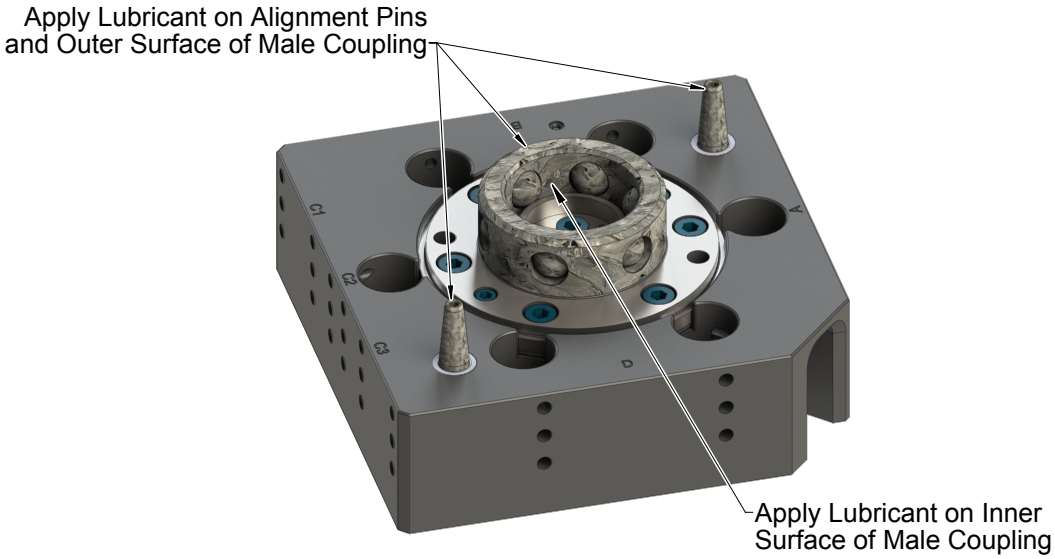

Figure 4.5—Clean Tool Plate Surfaces of locking Mechanism

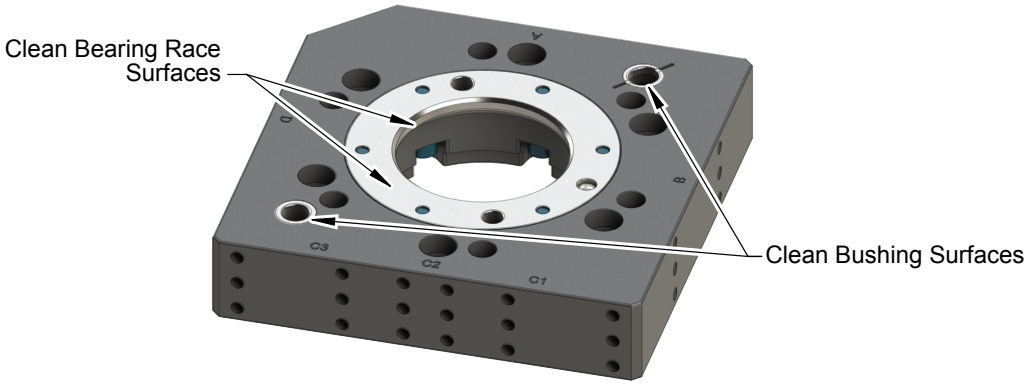

8. Use a clean rag to thoroughly remove any lubricant and debris from the Tool plate bearing race and bushings.

NOTICE: No application of lubrication is necessary on the Tool plate components.

9. Safely resume normal operation.

4.3 Pin Block Inspection and Cleaning

Tools required: *Nylon Brush (ATI part number 3690-0000064-60)*

1. Place the Tool in a secure location.
2. Uncouple the Master and Tool plates.
3. Turn off and de-energize all energized circuits (for example: electrical, pneumatic, and hydraulic circuits).
4. Inspect the Master and Tool pin blocks for debris or darkened pins.

Figure 4.6—Inspect Master and Tool Pin Blocks

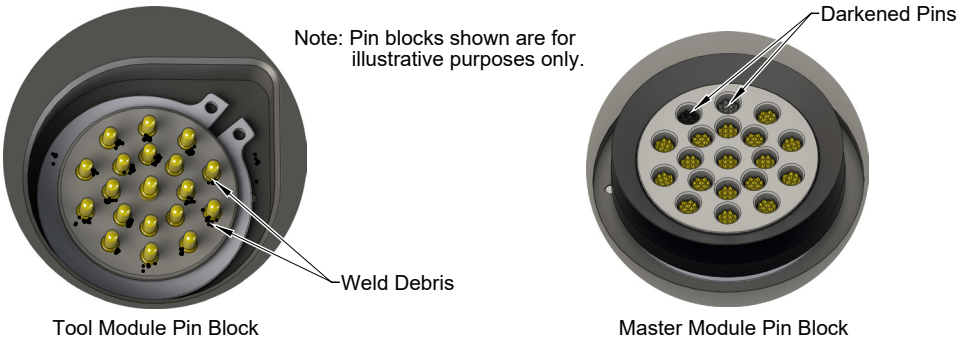

5. If debris or darkened pins are present, use a vacuum to remove the debris, and clean using a nylon brush (ATI part number 3690-0000064-60).

> **NOTICE:** Do not use an abrasive media and/or cleaners or solvents to clean the contact pins. Using abrasive media and/or cleaners or solvents will cause damage to the contact surface or cause pins to stick. Clean contact surfaces with a vacuum or non-abrasive media such as a nylon brush (ATI part number 3690-0000064-60).

Figure 4.7—Clean Pin Blocks with a Nylon Brush

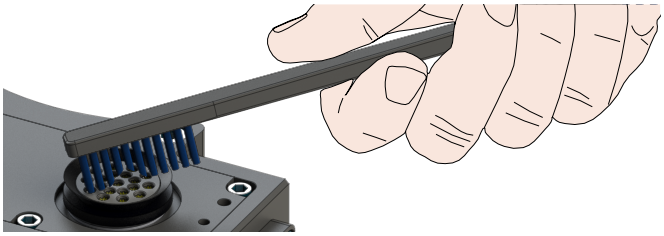

6. Inspect the Master and Tool pin blocks for stuck pins or pin block damage.

Figure 4.8—Stuck Pin and Pin Block Damage

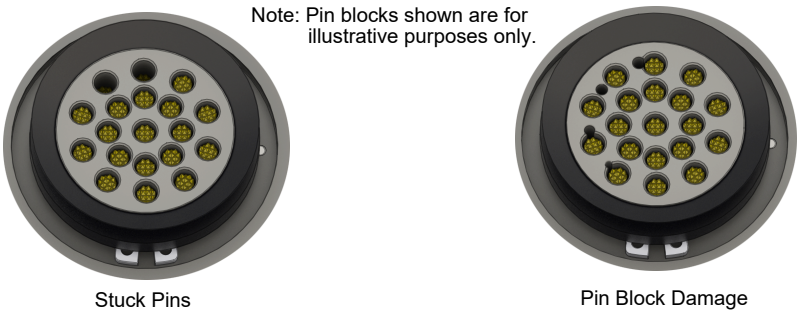

7. If pins become stuck or if there is damage to the pin block, contact ATI for either a possible pin replacement procedure or module replacement.
8. Safely resume normal operation.

5. Troubleshooting and Service Procedures

If the Tool Changer is not working properly, troubleshooting and service information is in the following sections to resume normal operation.

WARNING: Do not perform maintenance or repair(s) on the Tool Changer or modules unless the Tool is safely supported or placed in the tool stand, all energized circuits (for example: electrical, air, water, etc.) are turned off, pressurized connections are purged and power is discharged from circuits in accordance with the customer specific safety practices and policies. Injury or equipment damage can occur with the Tool not placed and energized circuits on. Place the Tool in the tool stand, turn off and discharge all energized circuits, purge all pressurized connections, and verify all circuits are de-energized before performing maintenance or repair(s) on the Tool Changer or modules.

CAUTION: Thread locker applied to fasteners must not be used more than once. Fasteners might become loose and cause equipment damage. Always apply new thread locker when reusing fasteners.

5.1 Troubleshooting Procedures

To resolve issues that may cause the Tool Changer not to function properly, refer to the following troubleshooting table for assistance.

Table 5.1—Troubleshooting

Symptom	Cause	Resolution
Tool Changer will not lock and/or unlock (or Lock sensor does not indicate Tool Changer is Locked)	Debris caught between the Master and Tool plates	Clean debris from between Master and Tool plates. Verify mounting fasteners is secure and does not protrude above the mating surfaces.
	Insufficient or no air pressure supply to the lock or unlock ports.	Verify proper air pressure and pneumatic valve is supplied. Refer to *Section 2.9—Pneumatic Connections and Valve Requirements.*
	Air pressure trapped in de-energized Lock or Unlock ports.	Air pressure must be vented to the atmosphere properly, refer to *Section 2.9—Pneumatic Connections and Valve Requirements* or refer to the troubleshooting section of the air/valve adapter manual for more information.
	Pneumatic connections loose or damaged, solenoid cable damaged.	Refer to the air/valve adapter manual for more information.
	The ball bearings and/or cam are not moving freely in the male coupling.	Clean and lubricate as needed to restore smooth operation (see *Section 4.2—Cleaning and Lubrication of the Locking Mechanism and Alignment Pins*)
	The Master plate and Tool plate are not within the specified No-Touch zone when attempting to lock.	Check that the Tool is properly seated in the tool stand. Refer to *Section 3.5—Tool Storage Considerations.* Re-teach the robot to bring the Master plate and Tool plate closer together prior to attempting to lock.
Unit is locked but Lock signal does not read “on”.	Lock sensor/cable is damaged.	Replace the lock sensor assembly as necessary. Refer to *Section 5.2.1—Lock and Unlock Sensor Replacement.*
Unit is unlocked but Unlock signal does not read “on”	Unlock sensor/cable is damaged.	Replace the unlock sensor assembly as necessary. Refer to *Section 5.2.1—Lock and Unlock Sensor Replacement.*
Units Equipped with Electrical/Servo/Control/Signal Modules		
Loss of Communication	Debris in and around contact pins. Contact Pin worn or damaged.	Inspect V-ring seal for damage, replace damaged seal. Refer to *Section 4.3—Pin Block Inspection and Cleaning*
	Cable connections loose or cables damaged	Check that cable connection are secure and cables are not damaged.

5.2 Service Procedures

Component replacement procedures are provided in the following section:

5.2.1 Lock and Unlock Sensor Replacement

Parts required: *Refer to Section 6.1—QC-46 Master Plates Serviceable Parts*

Tools required: *2.5 mm hex key, torque wrench*

NOTICE: Some PNP and NPN sensors have cables that are hard-wired to the sensor. However, other PNP, NPN, and NAMUR sensors have a quick disconnect end that connects to a connector on a customer supplied cable. Refer to *Section 6.1—QC-46 Master Plates Serviceable Parts* for a description of the different types of sensors and their corresponding part number.

1. Place the Tool in a secure location.
2. Uncouple the Master and Tool plates.
3. Test the sensors:
   a. To test the lock sensor, make sure the Tool Changer is in the locked position. To test the unlock sensor, make sure the Tool Changer is in the unlocked position.
   b. Check to see if the signal is ON and the sensor LED illuminates, for the sensor being tested. If the sensors are not functioning, replace.
4. De-energize all energized circuits (for example: electrical, pneumatic, and hydraulic).
5. For quick disconnect sensors, disconnect the Lock and/or Unlock sensor cable connectors from the Lock and/or Unlock sensor assembly.
6. Remove the sensor assembly:
   a. Use a 2.5 mm hex key to remove the M3 socket head cap screw that secures the sensor assembly.
   b. Pull the sensor assembly straight out from the Tool Changer body.

CAUTION: The Lock and Unlock sensor assemblies are precision aligned and permanently assembled at the factory. Do not attempt to disassemble and rebuild.

Figure 5.1—Lock and Unlock Sensor Assembly Replacement

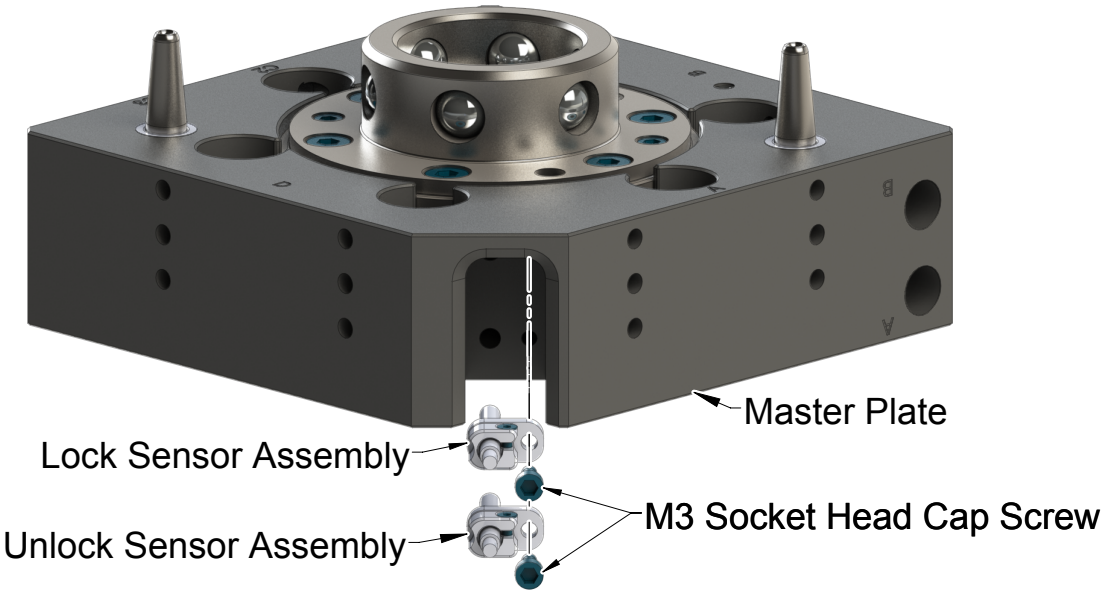

7. Discard the removed sensor.
8. Install the new sensor assembly:
   a. Insert the new sensor into the Tool Changer body as shown in *Figure 5.1*. Make sure the O-ring is in place and seated properly on the back side of the sensor assembly.
   b. Using a 2.5 mm hex key, secure the sensor assembly to the Master plate assembly with the M3 socket head cap screw. Tighten to 12 in-lbs (1.4 Nm).
9. For the quick disconnect sensors, connect the sensor cable connector to the proper sensor.
10. Confirm the operation of the Unlock sensor:
    a. Unlock the Tool Changer.
    b. Verify the LED in the Unlock sensor is on.
    c. If the sensor is not working, confirm that the sensor is properly installed.
11. Confirm the operation of the Lock sensor:
    a. Lock the Tool Changer.
    b. Verify the LED in the Lock sensor is on.
    c. If the sensor is not working, confirm that the sensor is properly installed.
12. Safely resume normal operation.

5.2.2 Seal Inspection and Replacement

Parts required: *Refer to Section 6—Serviceable Parts*

The seal protects the electrical connection between the Master and Tool module. Replace the seal if it becomes worn or damaged.

1. Place the Tool in a secure location.
2. Uncouple the Master and Tool plates.
3. Turn off and de-energize all energized circuits (for example: electrical, pneumatic, and hydraulic circuits).
4. To remove the existing seal, pinch the edge of the seal and pull the seal away from the pin block on the Master module.
5. To install a new seal, stretch the new seal over the shoulder of the pin block.
6. Push the seal hub down against the pin block.
7. Safely resume normal operation.

Figure 5.2—V-ring Seal Replacement

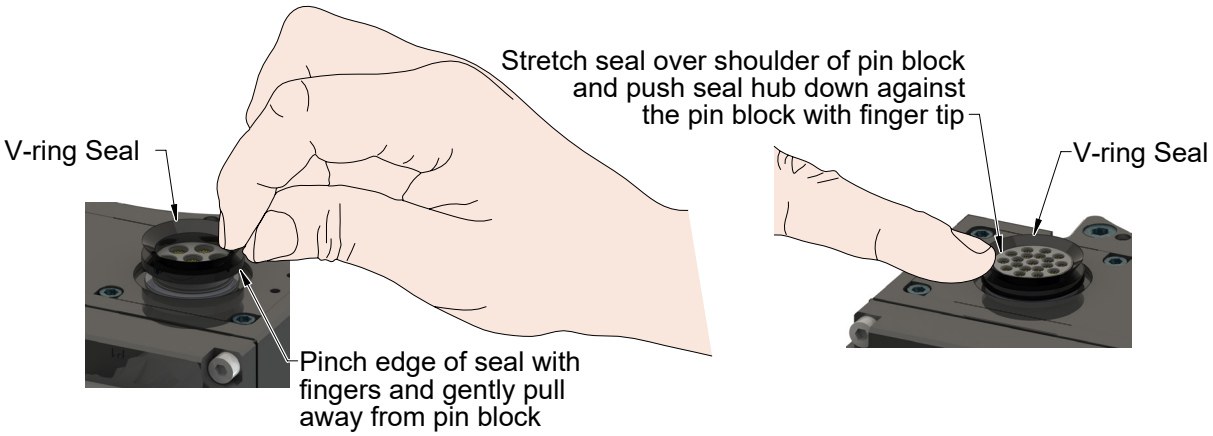

5.2.3 Alignment Pin Replacement

Refer to either of the following procedures to replace the alignment pin. The preferred method is to replace the alignment pin from the Tool side of the Master plate. An alternative method is to replace the alignment pin from the robot side of the Master plate.

5.2.3.1 Preferred Method

Refer to *Figure 5.3*.

Parts required: *Refer to Section 6.1—QC-46 Master Plates Serviceable Parts.*

Tools required: *2.5 mm hex key, torque wrench*

Supplies required: *Clean rag, MobilGrease XHP222, Loctite 242*

1. Place the Tool in a secure location.
2. Uncouple the Master and Tool plates.
3. De-energize all energized circuits (for example: electrical, pneumatic, and hydraulic).
4. Clean off debris and excess grease from the alignment pin.
5. Unscrew the alignment pin from the Master plate using a 2.5 mm hex key.

Figure 5.3—Remove the Alignment Pin with a 2.5 mm hex key

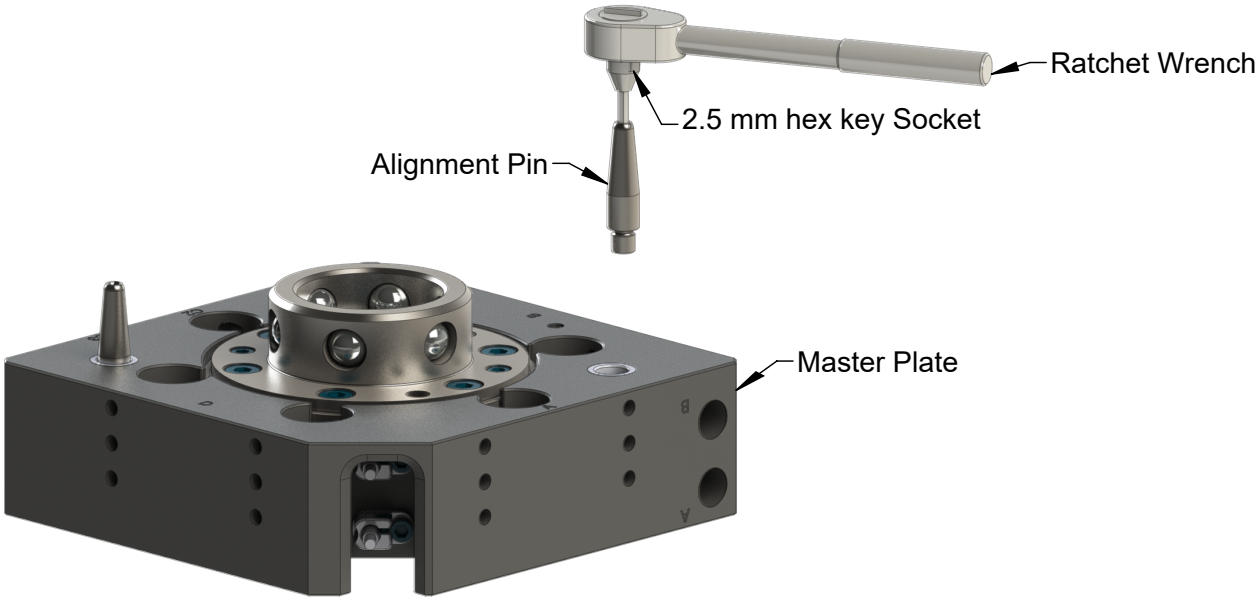

6. Remove the alignment pin.
7. Apply Loctite 242 on the threads of the alignment pin.
8. Install the alignment pin into the bushing on the Tool Changer. Tighten to 60 in-lbs (6.8 Nm).
9. Apply MobilGrease XHP222 Special grease to the alignment pin (see *Section 4.2—Cleaning and Lubrication of the Locking Mechanism and Alignment Pins*
10. Safely resume normal operation

5.2.3.2 Alternative Method

Parts required: *Refer to Section 6.1—QC-46 Master Plates Serviceable Parts.*

Tools required: *3 mm hex key, torque wrench*

Supplies required: *Clean rag, MobilGrease XHP222, Loctite 242*

1. Place the Tool in a secure location.
2. Uncouple the Master and Tool plates.
3. De-energize all energized circuits (for example: electrical, pneumatic, and hydraulic).
4. Clean off debris and excess grease from the alignment pin.
5. Remove the Master plate refer to *Section 2.3—Master Plate Removal*.
6. Use a 3 mm hex key to remove the alignment pin from the back side of the Master plate. Turning the alignment pin clockwise to force the pin out on the other side of the plate.

Figure 5.4—Remove the Alignment Pin with a 3 mm hex key

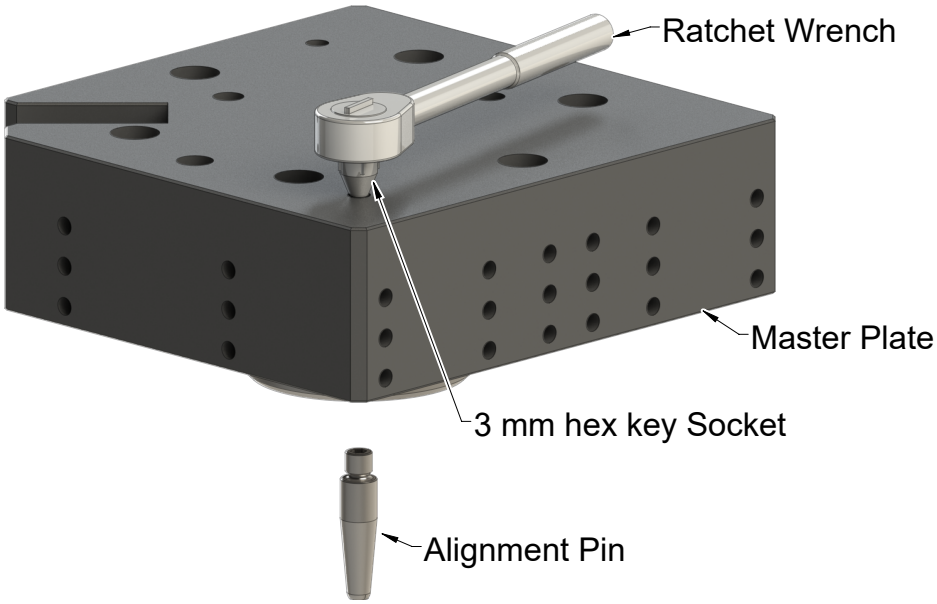

7. Remove the alignment pin.
8. Apply Loctite 242 on the threads of the alignment pin.
9. Install the alignment pin into the bushing on the Tool Changer. Tighten to 60 in-lbs (6.8 Nm).
10. Apply MobilGrease XHP222 Special grease to the alignment pin (see *Section 4.2—Cleaning and Lubrication of the Locking Mechanism and Alignment Pins*
11. Safely resume normal operation.

6. Serviceable Parts

6.1 QC-46 Master Plates Serviceable Parts

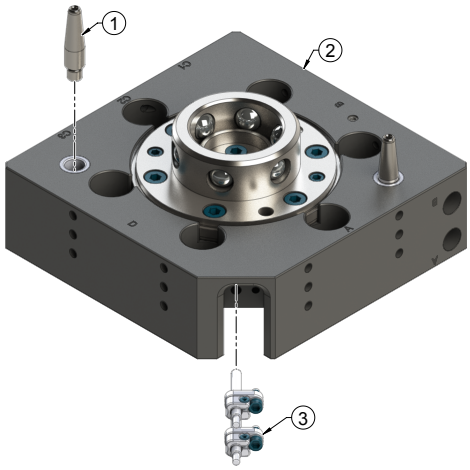

Table 6.1—Master Plate			
Common Parts			
Item No.	**Qty**	**Part Number**	**Description**
1	2	3700-20-1373	Mono Alignment Pin, QC-100, A2
9120-046AM-0-0-000-0-S0-(E)			
2	1	9120-046AM-0-0-000-0-S0	QC-46 Master, Dummy Plugs
		9120-046AM-0-0-000-0-S0-E	QC-46 Master, Euro, Dummy Plugs
3	2	9005-20-2378	Sensor Carrier Assembly, Single Screw, Dummy Sensor, 4 mm Dowel
9120-046AM-0-0-000-0-SA-(E)			
2	1	9120-046AM-0-0-000-0-SA	QC-46 Master, NPN Sensors with Hardwired 5 m Cables
		9120-046AM-0-0-000-0-SA-E	QC-46 Master, Euro, NPN Sensors with Hardwired 5 m Cables
3	2	9005-20-8531	Sensor Carrier Assembly, Single Screw, 4 mm NPN, Hardwired with 5 m Cable, Flying Leads
9120-046AM-0-0-000-0-SB-(E)			
2	1	9120-046AM-0-0-000-0-SB	QC-46 Master, PNP Sensors with Hardwired 5 m Cables
		9120-046AM-0-0-000-0-SB-E	QC-46 Master, Euro, PNP sensors with Hardwired 5 m cables
3	2	9005-20-8512	Sensor Carrier Assembly, Single Screw, 4 mm PNP, Hardwired with 5 m cable, Flying Leads,
9120-046AM-0-0-000-0-SM-(E)			
2	1	9120-046AM-0-0-000-0-SM	QC-46 Master, PNP Sensors
		9120-046AM-0-0-000-0-SM-E	QC-46 Master, Euro, PNP Sensors
3	2	9005-20-8523	Sensor Carrier Assembly, Single Screw, 4 mm PNP, quick disconnect, 0 Degree Orientation
9120-046AM-0-0-000-0-SP-(E)			
2	1	9120-046AM-0-0-000-0-SP	QC-46 Master, NPN Sensors
		9120-046AM-0-0-000-0-SP-E	QC-46 Master, Euro, NPN Sensors
3	2	9005-20-8530	Sensor Carrier Assembly, Single Screw, 4 mm NPN, quick disconnect, 0 Degree Orientation
9120-046AM-0-0-000-0-SV-(E)			
2	1	9120-046AM-0-0-000-0-SV	QC-46 Master, NAMUR Sensors
		9120-046AM-0-0-000-0-SV-E	QC-46 Master, Euro, NAMUR Sensors
3	2	9005-20-8747	Sensor carrier assembly, single screw, proximity NAMUR sensor, quick disconnect, 0.677, 0 Degree orientation, nitrile

6.2 QC-46 Tool Plate Serviceable Parts

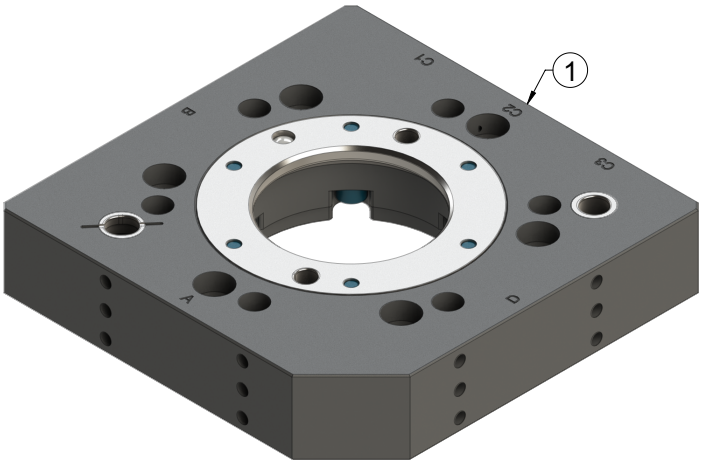

Table 6.2—Tool Plate			
Item No.	**Qty**	**Part Number**	**Description**
1	1	9120-046JT-0-0-000-0	QC-46 Base Tool Assembly, 63 mm recess

7. Specifications

Table 7.1—Specifications		
Specification	**Values**	**Description**
Recommended Max Payload	110 lbs (50kg)	The mass attached to the Tool Changer.
Operating Temperature Range	-20°–150°F (-30°–66°C)	Optimal operating temperature
Operating Pressure Range	60–100 psi (4.1–6.9 bar)	Locking mechanism supply pressure operating range. Supply to be clean, dry, and filtered to 40 micron or better.
Coupling Force @ 80 psi	1300 lbs (5, 800 N)	Axial holding force
Recommended Max Moment X-Y (Mxy)	2000 lbf-in (226 Nm)	Maximum recommended working load for optimum performance of the Tool Changer
Recommended Max Torque about Z (Mz)	1330 lbf-in (150 Nm)	Maximum recommended working torque for optimum performance of the Tool Changer
Positional Repeatability	0.0006” (0.015 mm)	Repeatability tested at rated load at one million cycles.
Weight (when coupled)	6.57 lb (2.98 kg)	Master Plate Assembly: 4.31 lb (1.95 kg) Tool Plate Assembly: 2.26 lb (1.03 kg)
Max. Recommended distance between Master and Tool plate	0.10” (2.5 mm)	No-Touch locking technology allows the Master and Tool plates to lock with separation when coupling.
Mounting/Customer Interface	Refer to *Section 8—Drawings*.	

8. Drawings

Drawings are available on the *ATI website* or by contacting an ATI representative.