Table of Contents

Glossary **C-3**

C. Control and Signal Modules **C-4**

DKG—EtherNet/IP Control/Signal Module **C-4**

1. Product Overview **C-4**

1.1 DKG Master Module **C-5**

1.2 DKF Tool Module **C-5**

1.3 DKQ Tool Module **C-5**

2. Product Information **C-6**

2.1 Master Module Information **C-6**

2.1.1 Class 1 Connection Information C-6

2.1.2 Integrated Web Server C-6

2.1.3 Network Settings C-8

2.1.4 Switch Module Settings (Ethernet Switch) C-10

2.1.5 Ethernet Switch Diagnostics C-11

2.1.6 DIP Switches on the Master Module C-13

2.1.7 Module and Network Status LED C-13

2.1.8 Using Ethernet Quick Connect C-14

2.2 Arc Prevention Circuit **C-15**

2.2.1 Arc Prevention Circuit Behavior during Coupling C-15

2.2.2 Arc Prevention Circuit Behavior during Uncoupling C-16

2.3 Tool Module **C-16**

2.3.1 Tool-ID Switches C-16

2.4 Tool Side TSI **C-17**

2.5 TSI Operational Function **C-18**

2.5.1 The Master is Free of the Stand and the Tool is in the Stand C-18

2.5.2 The Master is Coupled with the Tool and the Tool is in the Stand C-19

2.5.3 The Master is Coupled with the Tool and the Tool is Free of the Stand C-20

2.5.4 TSI Behavior for module with Firmware Version 2.52 or Later C-21

2.5.5 TSI Behavior for Module with Prior to Firmware Version 2.52 ..... C-21

2.6 Software **C-22**

3. Installation **C-24**

3.1 Master Module Installation **C-24**

3.2 Master Module Removal **C-25**

3.3 Tool Module Installation **C-26**

3.4 Tool Module Removal **C-26**

3.5 EtherNet/IP Configuration **C-27**

3.6 Utility Schematic C-27
3.7 Setting the Tool-ID C-28
4. Operation C-29
4.1 Lock, Unlock, and RTL Sensor Cable LED Behavior C-30
4.2 Recommended Sequence of the Operation C-31
5. Maintenance C-33
5.1 Pin Block Inspection and Cleaning C-34
6. Troubleshooting and Service Procedures C-35
6.1 Troubleshooting Procedures C-36
6.2 Diagnostic Functions and Error Handling C-37
6.2.1 Power Status C-37
6.2.2 Valve Power Status C-37
6.2.3 Error on the Latch or Unlatch Output C-37
6.2.4 “COMM OK” bit C-37
6.2.5 “Tool Power is On” bit C-37
6.2.6 “Unlatch Enabled” bit C-37
6.3 Service Procedures C-38
6.3.1 V-ring Seal Replacement C-38
7. Serviceable Parts C-38
8. Specifications C-39
9. Drawings C-41

Glossary

Term	Definition
Auxiliary Power	24 VDC Power Supply interface provided that supports Switched and Unswitched circuits.
Clear Errors	An output supplied to the ATI Master node to clear all error conditions.
Comm. Error	An input indicating the status of the Tool-ID communication between Master and Tool modules.
EOAT	End of the Arm Tooling
Error on Latch Output	An input indicating a short circuit overload condition exists with the Latch output.
Error on Unlatch Output	An input indicating a short circuit overload condition exists with the Unlatch output.
Latch (Lock)	An output supplied to the ATI Master to couple the Tool Changer.
Locked	A proximity sensor input indicating that the coupling mechanism is in the Lock position.
MDI and MDI-X	MDI stands for Media Dependant Interface. The X refers to the fact that transmit wires on the MDI Ethernet device must be connected to receive wires on the MDIX Ethernet device. Straight through cables connect pins 1 and 3 (transmit) on the MDI device to pins 1 and 3 (receive) on the MDIX device. Similarly pins 2 and 4 are receive on the MDI device and transmit on the MDIX device
Input and Logic Power Good	An input indicating the presence of the Input Power (sourced from the Un-switched Power Supply) at the ATI Master.
RTL (Ready-To-Lock)	A proximity sensor that indicates the Tool Changer Master is close to the Tool.
RTLV	An input provided for health status monitoring of the RTL Relay.
Switched Auxiliary Power	One circuit of the Auxiliary Power Supply that is tied into the E-stop circuit and will be switched off when the circuit is broken.
Tool ID	An input from the Master node reporting the values from the Tool-ID switches on the Tool module.
Tool Present	A hard-wired input (sourced from the Tool) indicating that the Master and Tool modules are electrically connected to each other.
TSI	The tool stand Interlock feature is a custom ATI safety solution and circuit designed to only allow Tool Changer release while in the stand or storage location.
TSRV	An input provided for health status monitoring of the TSI Relay.
TSI Switch	A switch is installed on the EOAT and is used to indicate that the EOAT is in the stand or storage location.
TSI Relay	A relay present in the ATI Tool module that is driven by the closure of the TSI Switch, therefore completing the Tool side portion of the TSI circuit, allowing the Tool Changer to be unlatched.
Unlatch	The output supplied to the ATI Master EtherNet/IP node to uncouple the Tool Changer.
Unlocked	A proximity sensor input indicating that the coupling mechanism is in the Unlocked position.
Valve Power Available	An input indicating the presence of the Valve Power (= Switched Auxiliary Power) at the ATI Master

C. Control and Signal Modules

DKG—EtherNet/IP Control/Signal Module

1. Product Overview

The modules enable control and communication with the Tool Changer using EtherNet/IP. The Master module passes the EtherNet/IP network I/O through a managed switch, capable of supporting Quick Connect, to the Tool module. Quick Connect allows short connection times.

Control of the Tool Changer is through the Master Node along with the reporting of the Tool Changer I/O, such as Lock, Unlock, and Ready-to-Lock signals. Tool-ID, from the Tool module, is reported through the Master module bitmap. Refer to *Section 2—Product Information.* The Tool module provides a push button switch for setting the Tool-ID.

When coupled, the Master and Tool modules pass signals and power using a spring pin block. A V-ring seal surrounds the pin block and is water resistant but not waterproof when modules are coupled. Refer to *Section 9—Drawings*.

General fault reporting is supported for the presence of the Input and Logic power and solenoid valve power. Diagnostic is supported for output short circuit and overload conditions. Refer to *Section 2.6—Software* and *Section 6.2—Diagnostic Functions and Error Handling* for more information on these attributes.

The Master module includes ATI's exclusive Arc Prevention Circuit which extends the life of all electrical power contacts on the pin block. Refer to *Section 2.2—Arc Prevention Circuit*.

A single or double solenoid valve is included in the Master valve adapter for Lock/Unlock control of the Tool Changer. The user is required to provide a pneumatic supply source to the Tool Changer.

The Unlock signal to the solenoid valve is routed through a "Tool Stand Interlock" (TSI) safety circuit that prevents the robot from unlocking the Tool from the Master when not in a tool stand.

1.1 DKG Master Module

A 4-Pin Mini connector is provided on the Master for the power supply of the DKG's EtherNet/IP interface and sensor inputs. The same 4-Pin connector also supplies the output power to the Tool module. One 4-Pin M12 D-Coded connector is provided on the Master module for EtherNet/IP communications interface with the Master and downstream tooling.

Figure 1.1—Master and Tool Modules

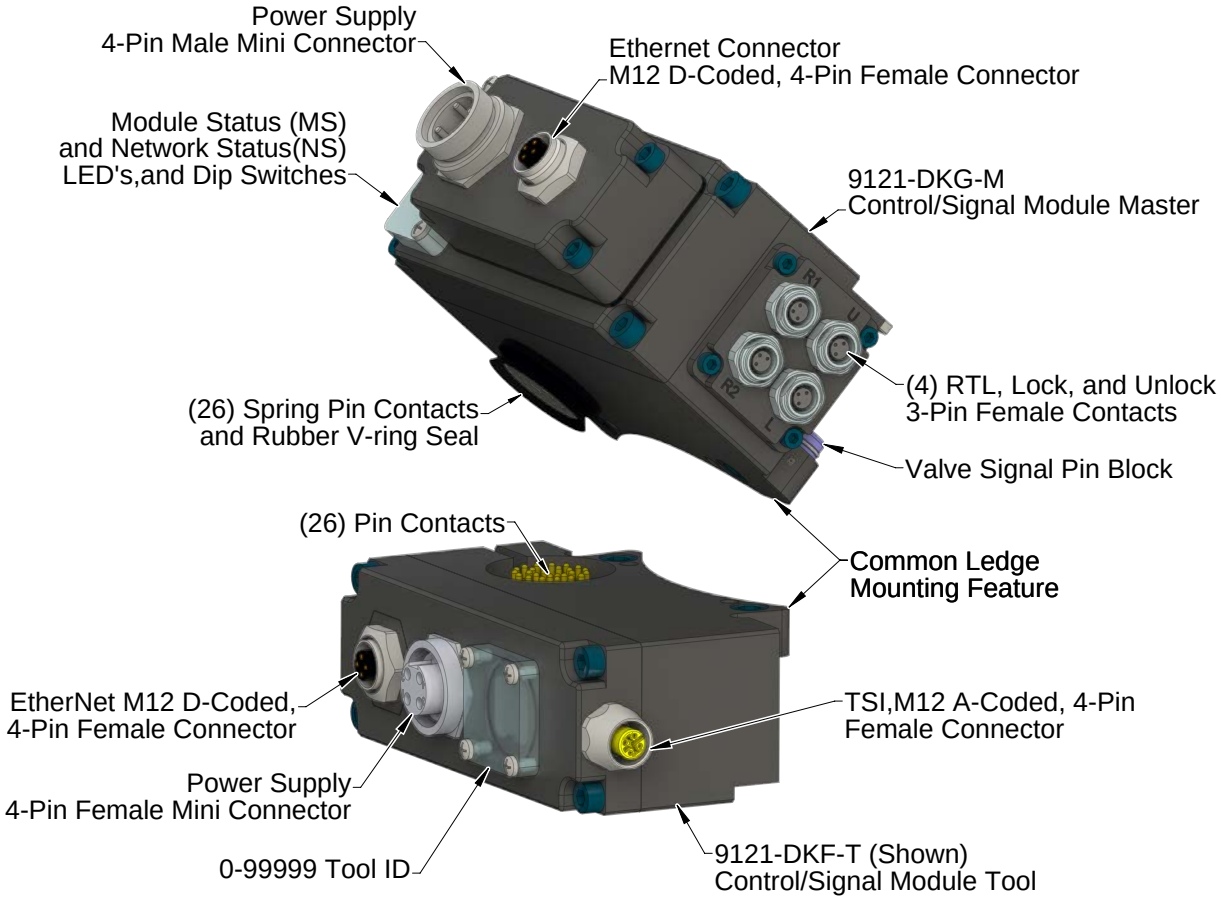

1.2 DKF Tool Module

A 4-pin M12 D-Coded connector provides the EtherNet/IP communications interface with the downstream tooling. A 4-pin Mini connector "DCIO" provides the auxiliary power to the downstream tooling. The DKF Tool module provides a 4-pin M12 A-Coded connector for a TSI mechanical limit switch.

1.3 DKQ Tool Module

A 4-pin M12 D-Coded connector provides the EtherNet/IP communications interface with the downstream tooling. A 4-pin Mini connector "DCIO" provides the auxiliary power to the downstream tooling. The DKQ Tool module provides a 5-pin M12 A-Coded connector for a TSI contactless safety switch.

2. Product Information

Prior to using the Tool Changer and the EtherNet/IP modules, various hardware settings must be configured. EtherNet/IP module users should be familiar with EtherNet/IP standards.

2.1 Master Module Information

The module operates as a server on the EtherNet/IP network. The module supports Class 3 Connected Explicit Messaging, UCMM Explicit Messaging, and Class 1 Connected Cyclic I/O Messaging. The Master Node does not support Client functionality.

2.1.1 Class 1 Connection Information

Table 2.1 lists the Class 1 Connection Information for the DKG Master module.

Table 2.1—Class 1 Connection Information

	Instance	Size in Bytes
Configuration	128	0
Input	7	8
Output	37	8

2.1.2 Integrated Web Server

The module's integrated web server hosts several web pages. One of the pages provides configuration options for communication settings. Refer to *Figure 2.1*.

A web browser, such as Internet Explorer or Mozilla Firefox, is required to access the web server. The module's web pages use simple HTML and do not require any plug-ins.

To bring up the main page of the web server.

1. Type the module's IP address into the browser's address field and press enter.
2. Click on the "Communications" button on the menu bar to open the Communication Settings menu. This screen allows you to configure the module's network settings such as IP address, subnet mask, default gateway, enable or disable the DHCP. The Robot and Tool side port switch module settings such as Auto-Negotiation, speed setting, enable or disable Auto-MDIX can also be configured.

Figure 2.1—DKG Integrated Web Server Communication Settings Page

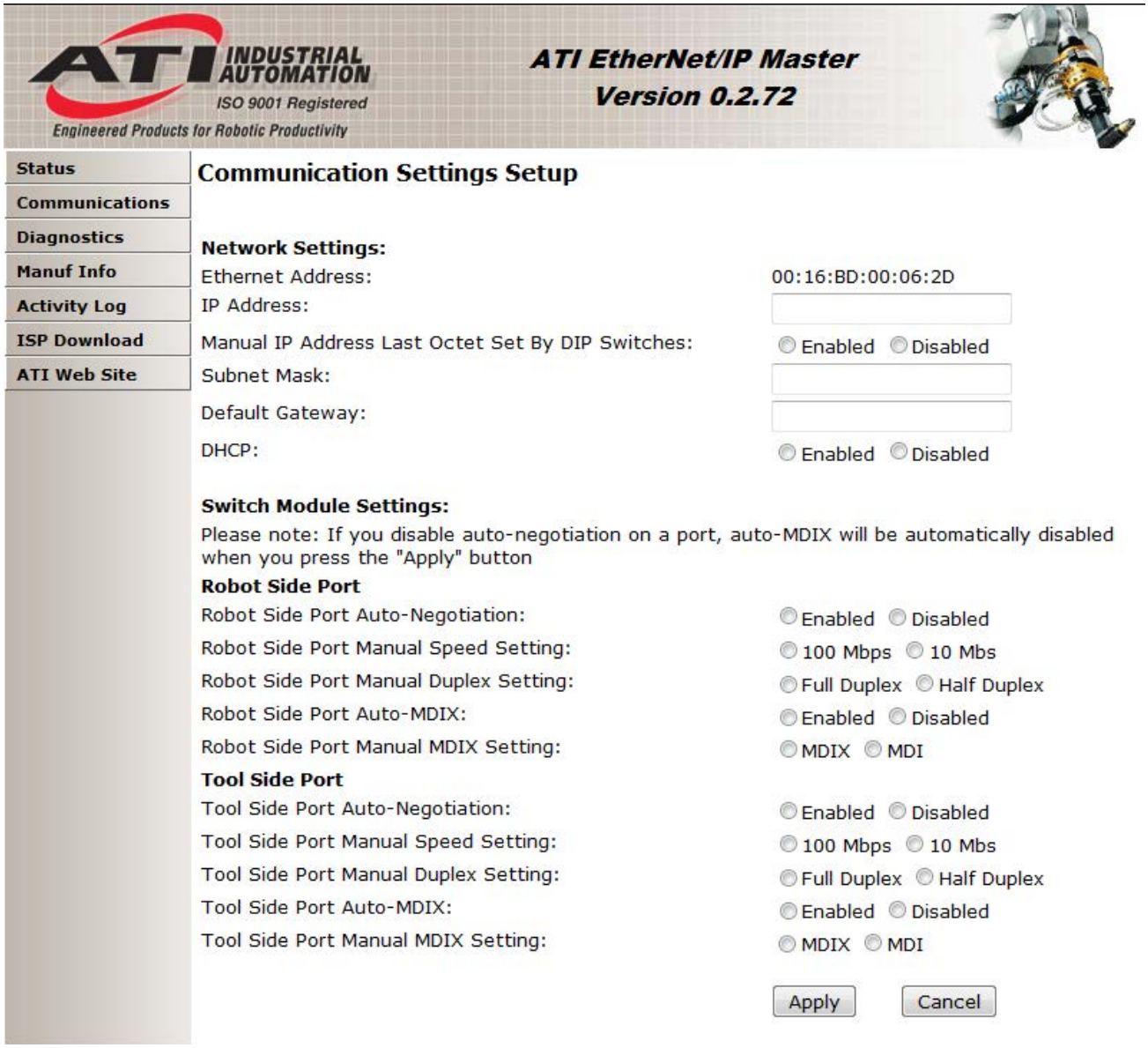

NOTICE: The Communication Settings Setup Screen is shown for reference only, refer to *Section 2.1.3—Network Settings* for the Network Settings defaults and *Section 2.1.4—Switch Module Settings (Ethernet Switch)* Switch Module Settings Robot and Tool side port default settings.

2.1.3 Network Settings

The Master module network settings are only loaded upon power up, consequently the module must be power cycled for new network setting changes to be used. The default settings are as follows:

- IP Address is set to **136.129.1.1**.
- Manual IP address Last Octet Set by DIP Switches is **Enabled**. (The default DIP switch settings are set to 136.129.1.1).
- The subnet mask is set to: **255.255.0.0.**
- The Gateway is set to: **0.0.0.0**.
- DHCP is **Disabled.**

There are four ways to set the modules network configurations:

1. *Section 2.1.3.1—Using the Module Defaults for the Network Settings*
2. *Section 2.1.3.2—Using the Communication Setting Page to configure the Modules Network Settings*
3. *Section 2.1.3.3—Using the DIP Switches to Configure the IP Address and Communication Settings Page for Other Module Network Settings*
4. *Section 2.1.3.4—Using a DHCP Server to Configure the Modules Network Settings*

2.1.3.1 Using the Module Defaults for the Network Settings

To configure the network settings to the module defaults manually set DIP switch 9 to **ON**. Refer to *Section 2.1.6—DIP Switches on the Master Module*. This will disregard the IP address manually set from the module DIP switches 1-8 and any values entered into the Communication Setting Setup page. The network setting will be set to the module defaults listed in *Section 2.1.3—Network Settings* after power up. The values entered into the Communication Setting page will remain but the module will use the default network settings.

2.1.3.2 Using the Communication Setting Page to configure the Modules Network Settings

To configure the network settings using the values entered from the Communication Setting Setup page manually set DIP switch 9 to **OFF**. Refer to *Section 2.1.6—DIP Switches on the Master Module*. This will disregard the IP address manually set from the module DIP switches 1-8) and use the values entered into the Communication Setting Setup page. On the Communication page click **Edit** on the bottom of the page: This allows you to edit the network settings.

Select the following setting from the Communication settings page:

- IP Address will change to **value entered** after power up.
- Manual IP address Last Octet Set by DIP Switches must be set to **Disabled** after power up. (The DIP switch settings will be ignored).
- The Subnet Mask will change to **value entered** after power up.
- The Default Gateway will change to **value entered** after power up.
- DHCP must be set to **Disabled** after power up.
- Click **Apply** at the bottom of the Communication Setting page.
- Power up the module.

2.1.3.3 Using the DIP Switches to Configure the IP Address and Communication Settings Page for Other Module Network Settings

To configure the network settings using the values entered from the Communication Setting Setup page and the IP address from the DIP switches, manually set DIP 1 through 8 to the desired values and set switch 9 to **OFF**. Refer to *Section 2.1.6—DIP Switches on the Master Module*. This will use the IP address manually set from the module DIP switches 1-8 and use the values entered into the Communication Setting Setup page for the Subnet Mask and Default Gateway. On the Communication page click **Edit** on the bottom of the page: This allows you to edit the network settings.

NOTICE: If the DIP switches evaluate to an octet of 0 (DIP switches 1–8 all off) or 255 (DIP switches 1–8 all on), the last octet will be set to 1, in order to avoid using an illegal network address.

Select the following setting from the Communication settings page:

- IP Address: (The entered value form the communication page will be ignored and the value from the DIP switch setting on the module will be used).
- Manual IP address Last Octet Set by DIP Switches: must be set to **Enabled** (The IP address will be derived manually from the DIP Switch settings).
- The Subnet Mask will change to **value entered** after power up.
- The Default Gateway will change to **value entered** after power up.
- DHCP must be set to **Disabled** after power up.
- Click **Apply** at the bottom of the Communication Setting page.
- Power up the module.

2.1.3.4 Using a DHCP Server to Configure the Modules Network Settings

To configure the module to use values for the IP Address, Subnet Mask, and Default Gateway from the DHCP server, manually set DIP switch 9 to **OFF**. Refer to *Section 2.1.6—DIP Switches on the Master Module*. On the Communication page click **Edit** on the bottom of the page: This allows you to edit the network settings.

Select the following setting from the Communication settings page:

- DHCP: must be set to **Enabled.**
- Click **Apply** at the bottom of the Communication Setting page.
- Power up the module.

A DHCP server must be present in the network. If no DHCP server is responding within 30 seconds after power-up, the Master module will use the network setting entered on the communication setting setup page.

2.1.4 Switch Module Settings (Ethernet Switch)

The modules have an integrated managed Ethernet switch where the settings of two ports can be changed from the Communication Settings Setup page under Switch Module Settings. The modules are shipped with the following default switch settings. The default settings support EtherNet/IP Quick Connect.

The Ethernet switch resets to these known default settings by setting DIP switch 9 to the ON position and performing a power cycle. This will reset the module to the default but will not change the values entered in the Communication setting page.

NOTICE: In order to support a standard (not Quick Connect) EtherNet/IP application Auto Negotiation and Auto Crossover must be enabled on the Robot and the Tool Side Port. Otherwise there can be communication errors.

2.1.4.1 Robot Side Port:

Robot Side Port default settings:

- Robot Side Port Auto-Negotiation: **Enabled**
- Robot Side Port Manual Speed Setting: **100MPS**
- Robot Side Port Manual Duplex Setting: **Full Duplex**
- Robot Side Port Auto-MDIX : **Enabled** (Auto-MDIX = Auto Crossover)
- Robot Side Port Manual MDIX Setting: **MDI**

2.1.4.2 Tool Side Port:

Tool Side Port default settings:

- Tool Side Port Auto-Negotiation: **Disabled**
- Tool Side Port Manual Speed Setting: **100MPS**
- Tool Side Port Manual Duplex setting: **Full Duplex**
- Tool Side Port Auto-MDIX: **Disabled**
- Tool Side Port Manual MDIX Setting: **MDI-X** (MDI-X = Crossover)

2.1.5 Ethernet Switch Diagnostics

On the Diagnostics page of the web server (see *Figure 2.2*) the DKG-M module displays the current status of the robot and tool side port settings and diagnostic counters. This is the same information reported over the Ethernet Link Object 0xF6 in the EtherNet/IP protocol.

Figure 2.2—DKG Integrated Web Server Diagnostics Page

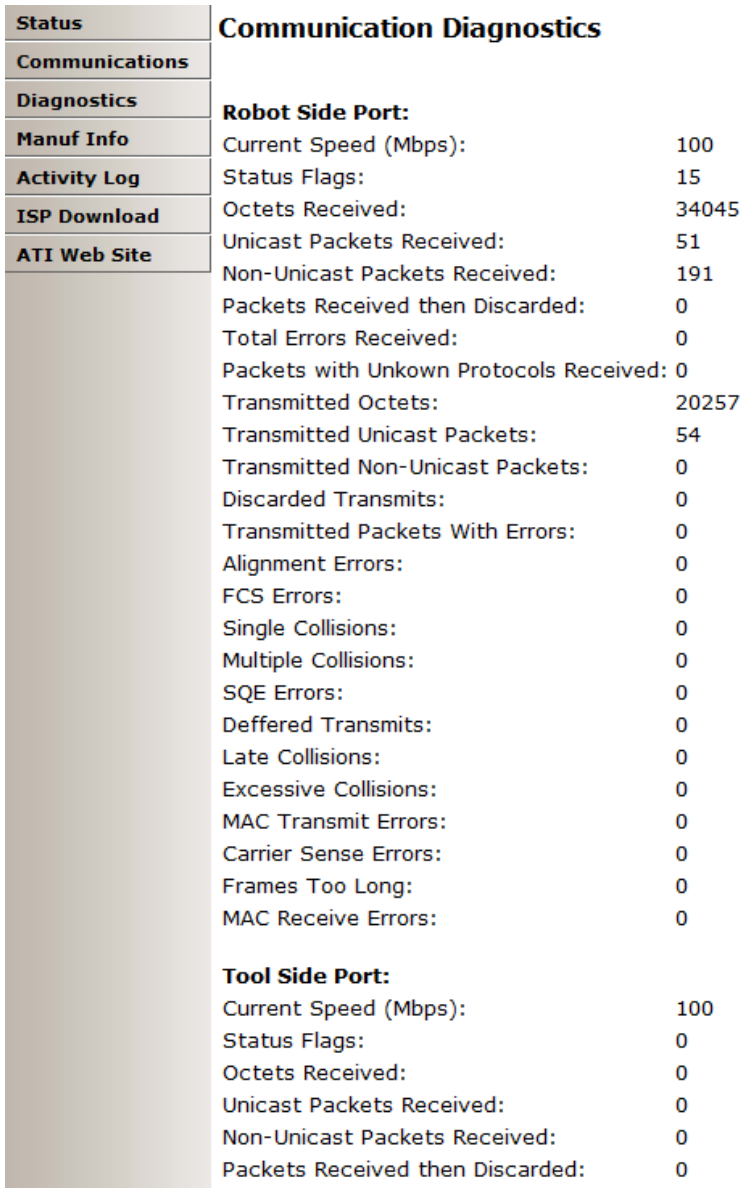

Figure 2.3—DKG Integrated Web Server Internal Diagnostics Page

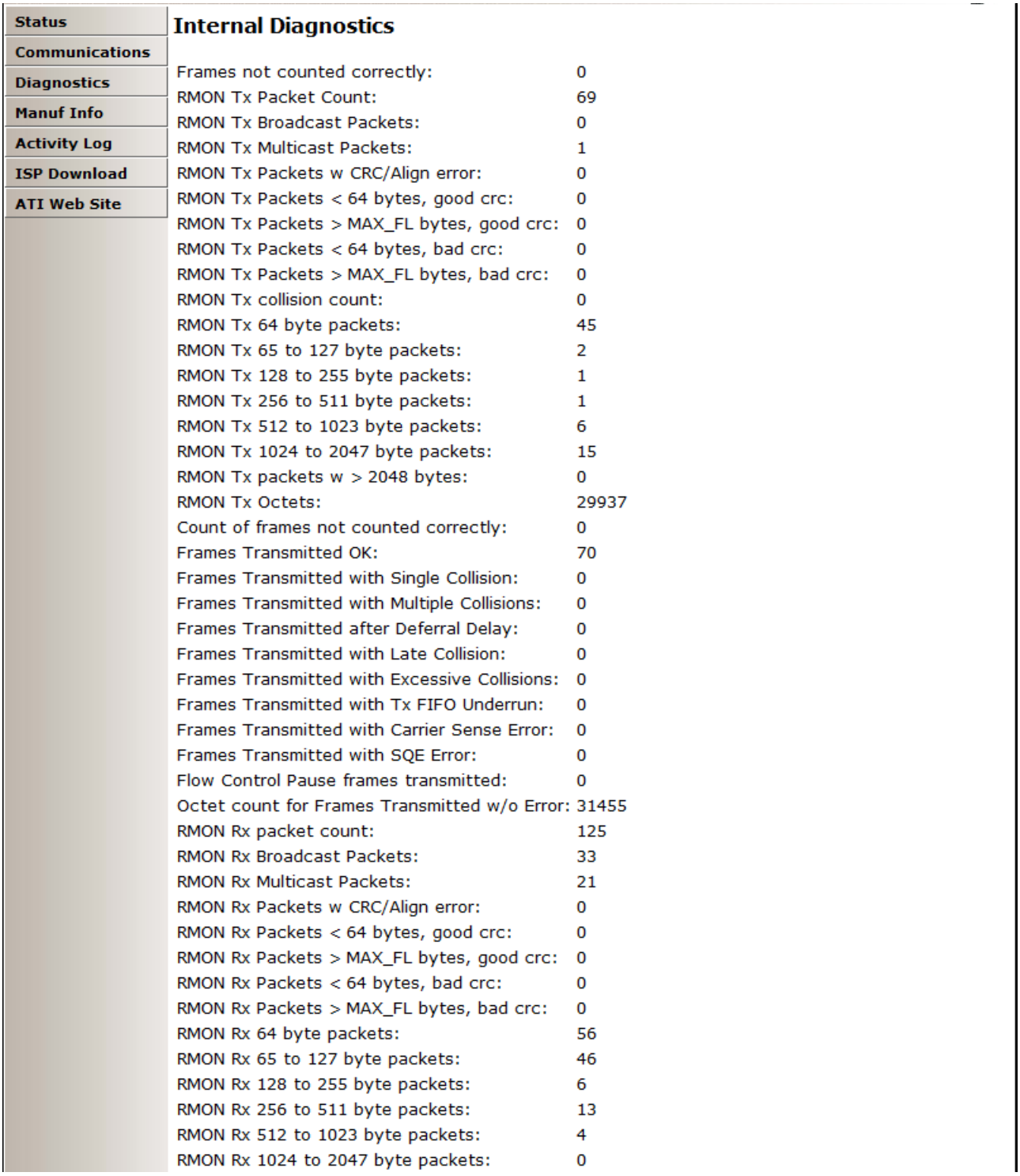

Status
Communications
Diagnostics
Manuf Info
Activity Log
ISP Download
ATI Web Site

Internal Diagnostics

Frames not counted correctly:	0
RMON Tx Packet Count:	69
RMON Tx Broadcast Packets:	0
RMON Tx Multicast Packets:	1
RMON Tx Packets w CRC/Align error:	0
RMON Tx Packets < 64 bytes, good crc:	0
RMON Tx Packets > MAX_FL bytes, good crc:	0
RMON Tx Packets < 64 bytes, bad crc:	0
RMON Tx Packets > MAX_FL bytes, bad crc:	0
RMON Tx collision count:	0
RMON Tx 64 byte packets:	45
RMON Tx 65 to 127 byte packets:	2
RMON Tx 128 to 255 byte packets:	1
RMON Tx 256 to 511 byte packets:	1
RMON Tx 512 to 1023 byte packets:	6
RMON Tx 1024 to 2047 byte packets:	15
RMON Tx packets w > 2048 bytes:	0
RMON Tx Octets:	29937
Count of frames not counted correctly:	0
Frames Transmitted OK:	70
Frames Transmitted with Single Collision:	0
Frames Transmitted with Multiple Collisions:	0
Frames Transmitted after Deferral Delay:	0
Frames Transmitted with Late Collision:	0
Frames Transmitted with Excessive Collisions:	0
Frames Transmitted with Tx FIFO Underrun:	0
Frames Transmitted with Carrier Sense Error:	0
Frames Transmitted with SQE Error:	0
Flow Control Pause frames transmitted:	0
Octet count for Frames Transmitted w/o Error:	31455
RMON Rx packet count:	125
RMON Rx Broadcast Packets:	33
RMON Rx Multicast Packets:	21
RMON Rx Packets w CRC/Align error:	0
RMON Rx Packets < 64 bytes, good crc:	0
RMON Rx Packets > MAX_FL bytes, good crc:	0
RMON Rx Packets < 64 bytes, bad crc:	0
RMON Rx Packets > MAX_FL bytes, bad crc:	0
RMON Rx 64 byte packets:	56
RMON Rx 65 to 127 byte packets:	46
RMON Rx 128 to 255 byte packets:	6
RMON Rx 256 to 511 byte packets:	13
RMON Rx 512 to 1023 byte packets:	4
RMON Rx 1024 to 2047 byte packets:	0

2.1.6 DIP Switches on the Master Module

The DKG-M module has 10 DIP switches which have the following functions:

DIP 1 through 8:	Last octet of the DKGs IP address.
DIP 9:	Set DKG-M IP address settings to the default values.
DIP 10:	Must always be in the OFF position.

Figure 2.4—EtherNet/IP Master Module DIP Switch Settings

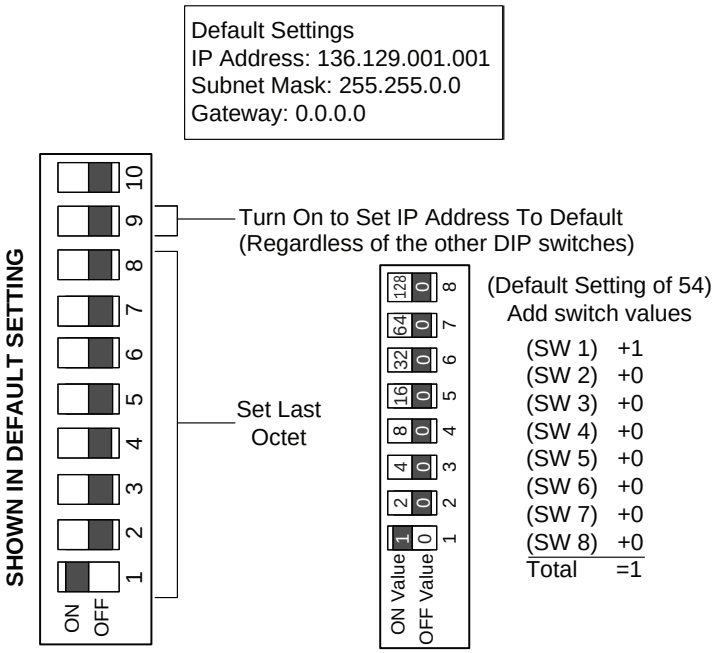

2.1.7 Module and Network Status LED

The module status LED is identified on the module as "MS". It provides device status for power and proper operation. Refer to *Table 2.2* for an outline of this LED's operation. The network status LED is identified on the module as "NS". It provides network status for power and communication. Refer to *Table 2.3* for an outline of this LED's operation.

Figure 2.5—EtherNet/IP Master Module LEDs and DIP Switch Settings

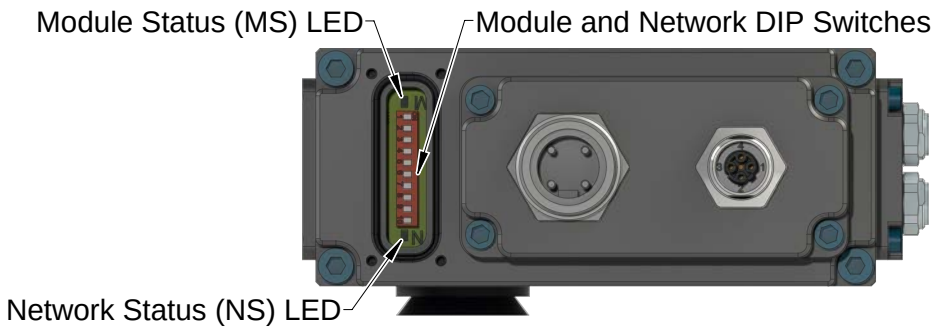

Table 2.2—Module Status LED		
Status	**LED Function**	**Note**
No Power	Off	No power applied. Check voltage is 24 VDC.
Operational	Green	Normal operation.
Standby	Flashing Green	No Tool module attached. Tool-ID in the bitmap not available. Configuration missing, incomplete or incorrect.
Recoverable Fault	Flashing Red	Recoverable fault.
Unrecoverable Fault	Red	Unrecoverable fault.

Table 2.3—Network Status LED		
Status	**LED Function**	**Note**
No Power/ Off Line/No IP Address	Off	Device not online. Device may not have an IP address or may be powered off.
Online, Not Connected.	Flashing Green	Device is online but connection is not established. Device not allocated to a Master.
OK Online, Connected	Green	Device is online with connections established. Device is allocated to a Master.
Connection Timeout	Flashing Red	One or more I/Os are timed out.

2.1.8 Using Ethernet Quick Connect

The PLC can communicate with downstream nodes, after electrical contact is established between the Master and Tool.

The Tool Electrical Lock signal for EtherNet/IP Quick Connect indicates that all electrical connections to the tool-side devices are made and power is supplied. This signal comes from the Tool Changer. The DKG module reports “Tool Electrical Lock” in the bitmap (Byte 4, bit 7 - refer to *Section 2.6—Software*).

In *Figure 2.6* actions shown in red are the typical application actions but may vary and are outside the scope of the manual. Refer to section E-3 of the ODVA EtherNet/IP specification (Edition 1.14) for specific requirements and actions of the controller.

Figure 2.6—Quick Connect Sequence Diagram

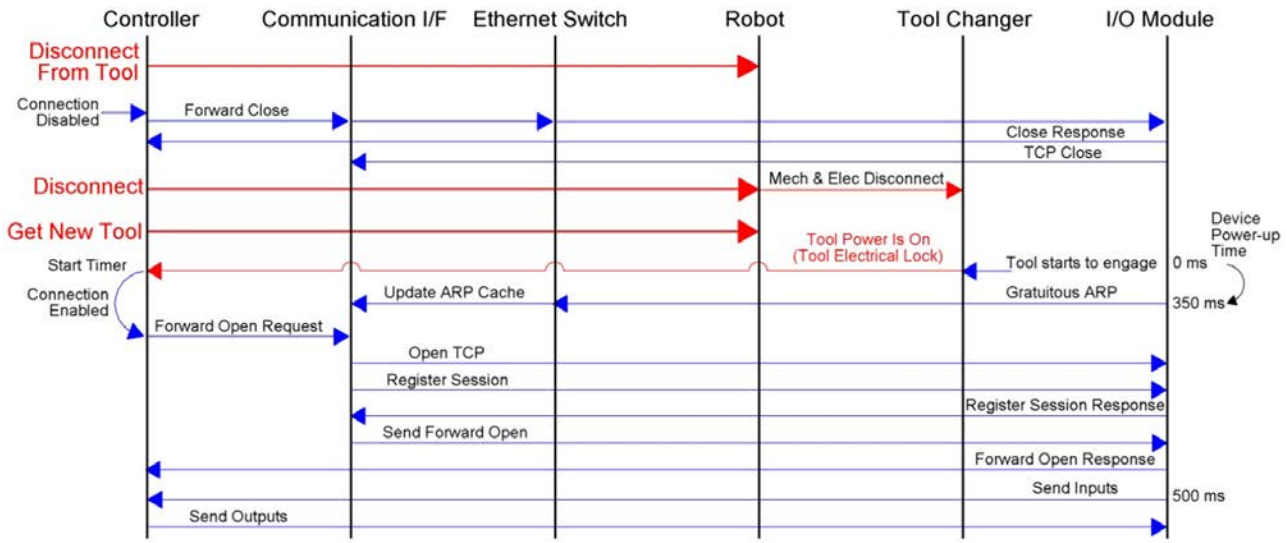

2.2 Arc Prevention Circuit

The DKG-M module incorporates ATI's Arc Prevention Circuit, which extends the life of all electrical power contacts by eliminating arcing caused by inductive loads and high inrush current during coupling/uncoupling. The Arc Prevention Circuit makes it possible to couple/uncouple without switching power off and prevents damage to the contacts.

In the DKG Module, the Arc Prevention Circuit controls the ON/OFF status of the following two power supplies:

1. Switched Auxiliary Power V+
2. Unswitched Auxiliary Power V+

2.2.1 Arc Prevention Circuit Behavior during Coupling

The behavior of the Arc Prevention circuit during coupling can be more clearly understood by referring to *Figure 2.7*, which shows the power-on timing diagram for the Arc Prevention Circuit. Starting at the top of the diagram, electrical contact between Master and Tool Pin Contacts occurs. The LATCH command is issued initiating locking of the Master and Tool.

The Arc Prevention Circuit will turn on DCIO Switched and Unswitched Auxiliary power. The time delay between when the electrical contacts become fully engaged to when power is actually available to the EOAT (time t_1 in the diagram) is less than 100ms.

Important: The Arc Prevention Circuit will only allow power to pass to the Tool after the LATCH command has been issued and the Master and Tool module's electrical contacts are fully engaged. The Tool Power Is ON (Byte 4, bit 7 - refer to *Section 2.6—Software*).

Figure 2.7— Arc Prevention Circuit Power-On Timing

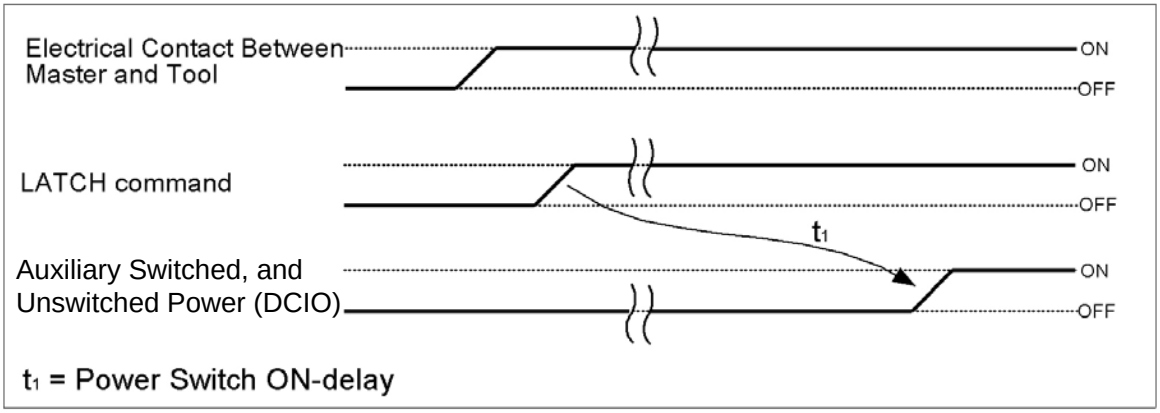

2.2.2 Arc Prevention Circuit Behavior during Uncoupling

Figure 2.8 which shows the power-off timing diagram for the Arc Prevention Circuit.

- The UNLATCH command is issued, which unlocks the Master and Tool.
- The Arc Prevention Circuit turns off auxiliary power.
- The Arc Prevention circuit turns off the Tooling power with a delay of the less than 50 ms (t2).
- Separation of the Master and Tool electrical contacts is delayed (t3) after the UNLATCH command is issued. Many factors affect the delay (t3) including the weight of the EOAT, the friction between Master and Tool alignment pins, etc. but is usually not shorter than 100 ms.

Figure 2.8—Arc Prevention Circuit Power-Off Timing

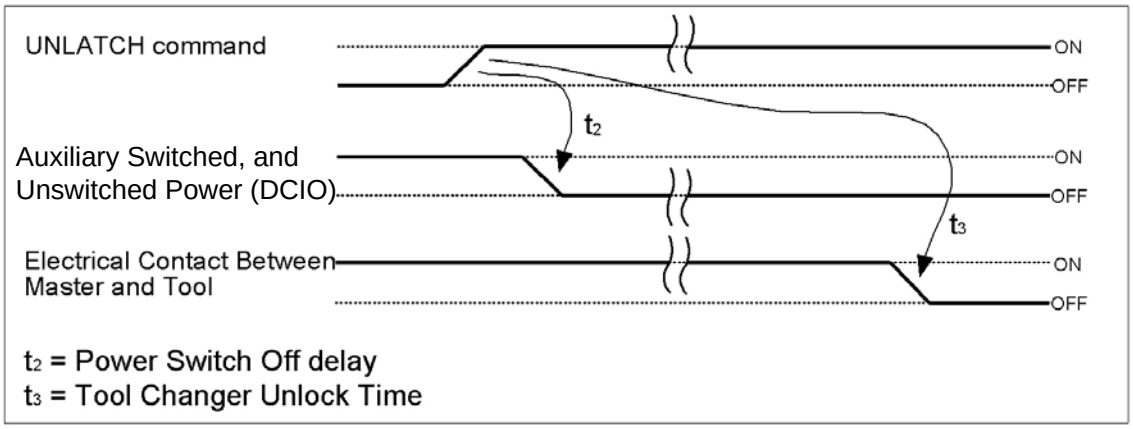

2.3 Tool Module

In addition to providing Tool-ID and Tool side TSI, the Tool module is a pass through for EtherNet/IP signals and auxiliary power to downstream equipment. For more details, refer to *Section 9—Drawings.*

2.3.1 Tool-ID Switches

A push-button switch is provided in Tool module for setting the Tool-ID. There are (10) Tool-ID values (0-9).

NOTICE: When there is no Tool mated to the Master, the Tool Present bit will become low and each Tool-ID bit will be assigned a value of the 1, which translates to a Tool-ID of 15. Since a Tool-ID of 15 is impossible, (there are only 0–9 digits on the push button switch) one could use this as an added indication that the Tool is not present.

The Tool module utilizes a patented, rapid communication method to report the Tool-ID from the push button switch. Typically the Tool-ID is available to the Master within 150 ms from the time the changer is coupled. To set the Tool-ID refer to *Section 3.7—Setting the Tool-ID.*

Figure 2.9—Tool-ID Switch Settings

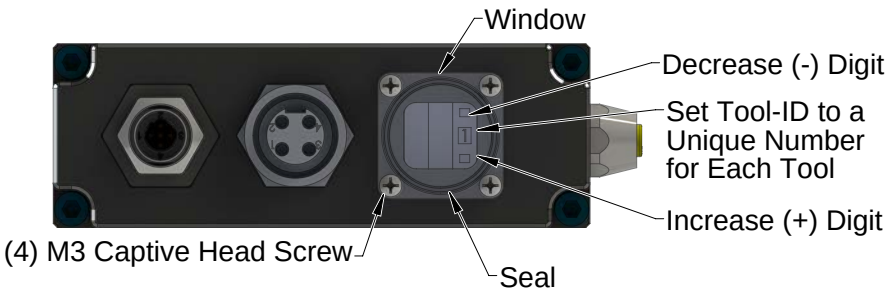

2.4 Tool Side TSI

The tool stand interlock (TSI) circuit ONLY allows Tool release while in the tool stand or storage location as indicated by actuation of a customer-integrated switch. Refer to the following for switch requirements:

- For the DKF Tool module, the customer must integrate a single throw, double pole (Normally Open, spring return) limit switch (reference *Figure 2.10*).
- For the DKQ Tool module, the customer must integrate a (2) channel, PL e rated contactless safety sensor, specifically Euchner CES-I-AP-M-C04-USB-117324.

The safety switch should be mounted to the end effector so that the switch is “made” only when the Tool is in the tool stand or storage location.

There is both a firmware and a hardware interrupt for the Unlatch output bit.

- Unlatch is enabled is reported in the bitmap in the form of the “Unlatch Enabled” bit. (refer to *Section 2.6—Software*).
- The UNLATCH output signal is routed through the TSI switch and thus cannot be completed without the TSI switch circuit being closed.

If the Tool Changer is given the UNLATCH output signal, the TSRV input must be ON or the Tool Changer will not unlatch. The TSRV input is driven by the TSI switch when it is made in the tool stand.

The following TSI status signals are also reported in the bitmap (refer to *Section 2.6—Software*):

- **RTLV** (Ready to Lock Verify): Ready to Lock Verify status of RTL bypass relay in the Master module.
- **TSIV** (TSI Limit Switch Verify): Status of 2nd contact of the limit switch that is located on the Tool.
- **TSRV** (TSI Relay Verify): Status of the TSI Relay in the Tool module.

Figure 2.10—Tool Stand Interlock (TSI)

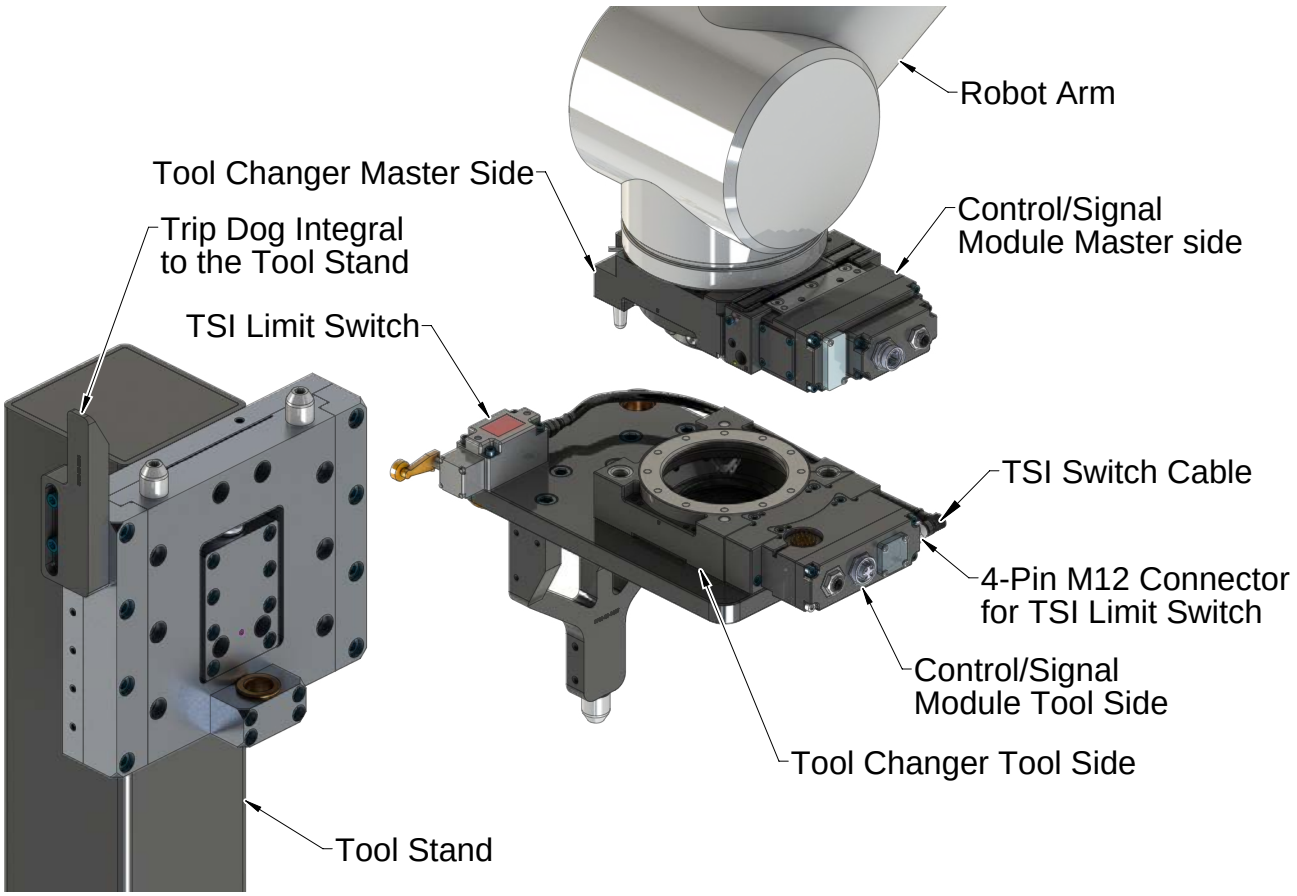

2.5 TSI Operational Function

The TSI system provides safe operation, by preventing the Tool Changer from unintentionally unlocking when the Tool is attached and not secured in the tool stand. The following sections describe the Tool Changer states and how the TSI system controls the unintentional unlocking of the Tool Changer.

2.5.1 The Master is Free of the Stand and the Tool is in the Stand

The Master is away from the tool stand, and the Tool is nested safely in the tool stand. Since the Master and Tool are not coupled, as indicated by the RTL sensors, the Unlatch output signal can still be executed through the RTL bypass circuit (RTL1 Relay).

2.5.1.1 RTL Bypass Relay Circuit

The Master module has an RTL bypass relay (RTL1 relay) that is normally closed. If the Tool Changer is inadvertently locked without a Tool attached, the Tool Changer can still be safely unlocked electronically since no Tool is present.

Figure 2.11—TSI Circuit with Master Free of Stand, Tool in the Stand

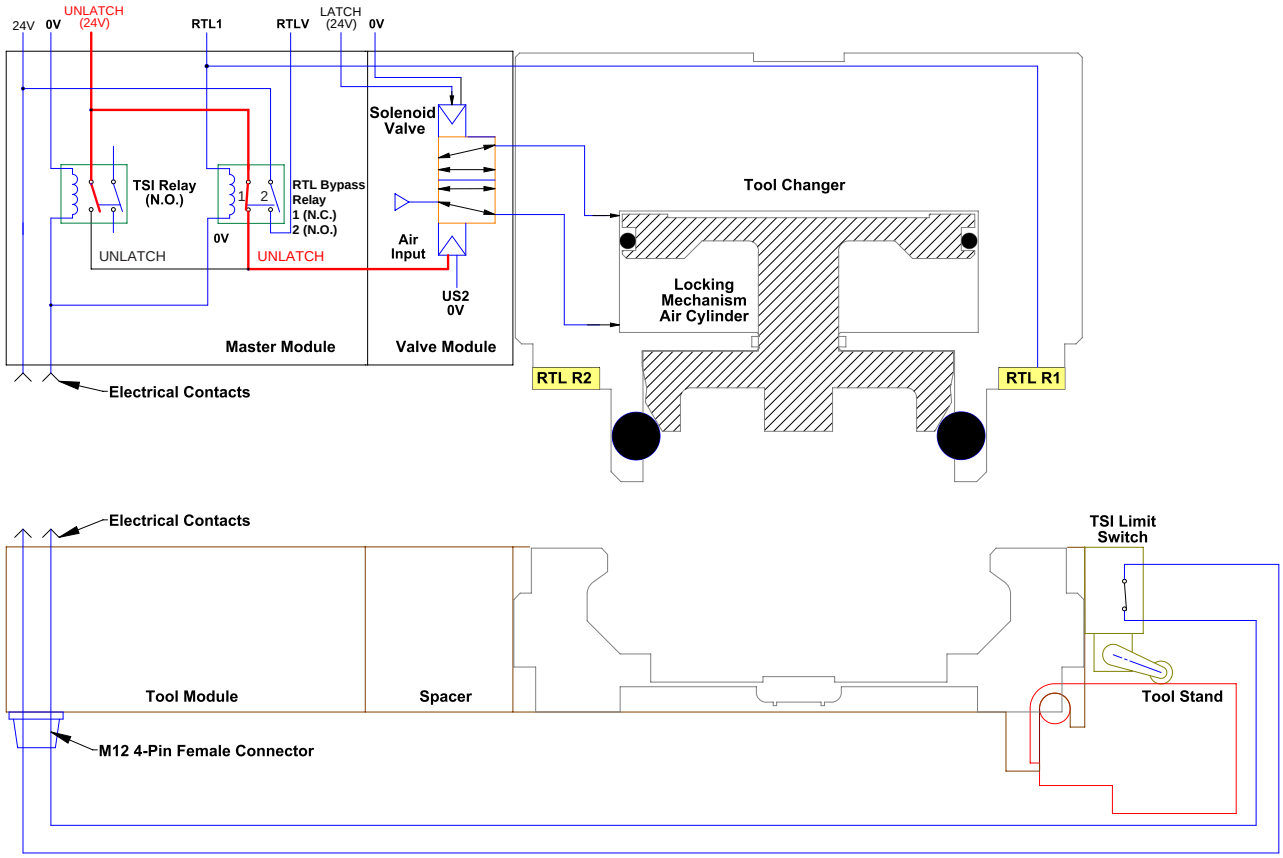

The second set of contacts on the RTL bypass relay is used to provide the RTLV diagnostic signal (when the RTL bypass relay is open, the RTLV signal should be off). The RTLV signal can indicate if the RTL bypass relay is operating properly.

Figure 2.12—Fault Monitoring			
RTL 1	**RTLV**	**Tool Presence**	**Comments**
OFF	OFF	ON[1]	RTL1 Not Operating Properly[2]
ON	ON	OFF[1]	
OFF	ON	OFF	Relay or RTL1 Not Operating Properly[2]
ON	OFF	ON	
ON	ON	ON	Operating Properly
OFF	OFF	OFF	

Notes:

1. Tool module present as evidenced by ability to read Tool-ID.
2. Dangerous situation where an unintentional Unlatch output signal could result in Tool release.

2.5.2 The Master is Coupled with the Tool and the Tool is in the Stand

The Master and Tool are within coupling distance and the electrical contacts are touching. The TSI relay closes because the TSI limit switch is actuated and the electrical contacts are touching. It is now possible for the TSI relay to pass the Unlatch output signal from the robot to the solenoid valve. The RTL R1 sensor is ON, detects the tool presence and opens the RTL bypass relay, turning ON the RTLV signal. The unlatch signal can no longer pass through the RTL bypass relay.

Figure 2.13—TSI Circuit with Master and Tool Locked

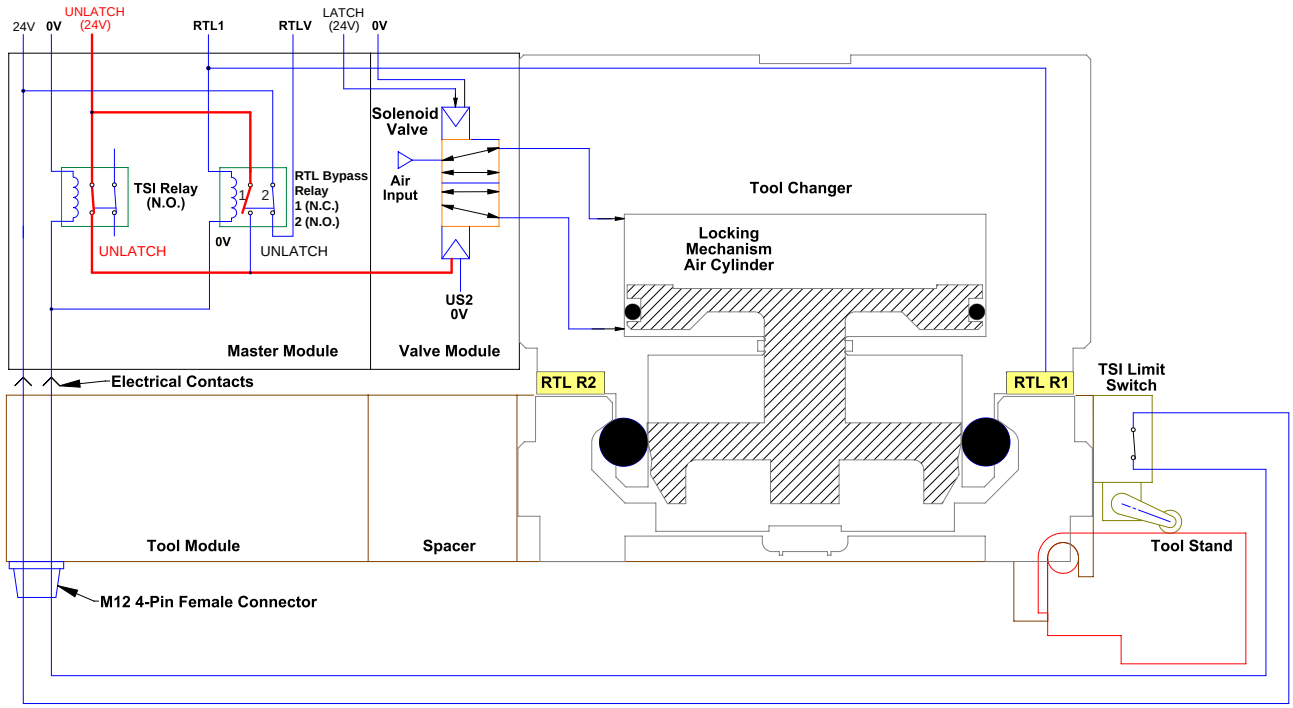

2.5.3 The Master is Coupled with the Tool and the Tool is Free of the Stand

The Master and Tool are coupled together and are free of the tool stand. The TSI limit switch (normally open) is not tripped and thus breaking the circuit in the TSI relay. The RTL R1 sensor is ON, detects the tool presence and opens the RTL bypass relay. Even if an unlatch command is sent, the Tool Changer will not unlock; it is not possible to close the TSI relay or turn the RTL R1 sensor ON and unlock the Tool Changer locking mechanism.

Figure 2.14—TSI Circuit with Master and Tool Locked (free of stand)

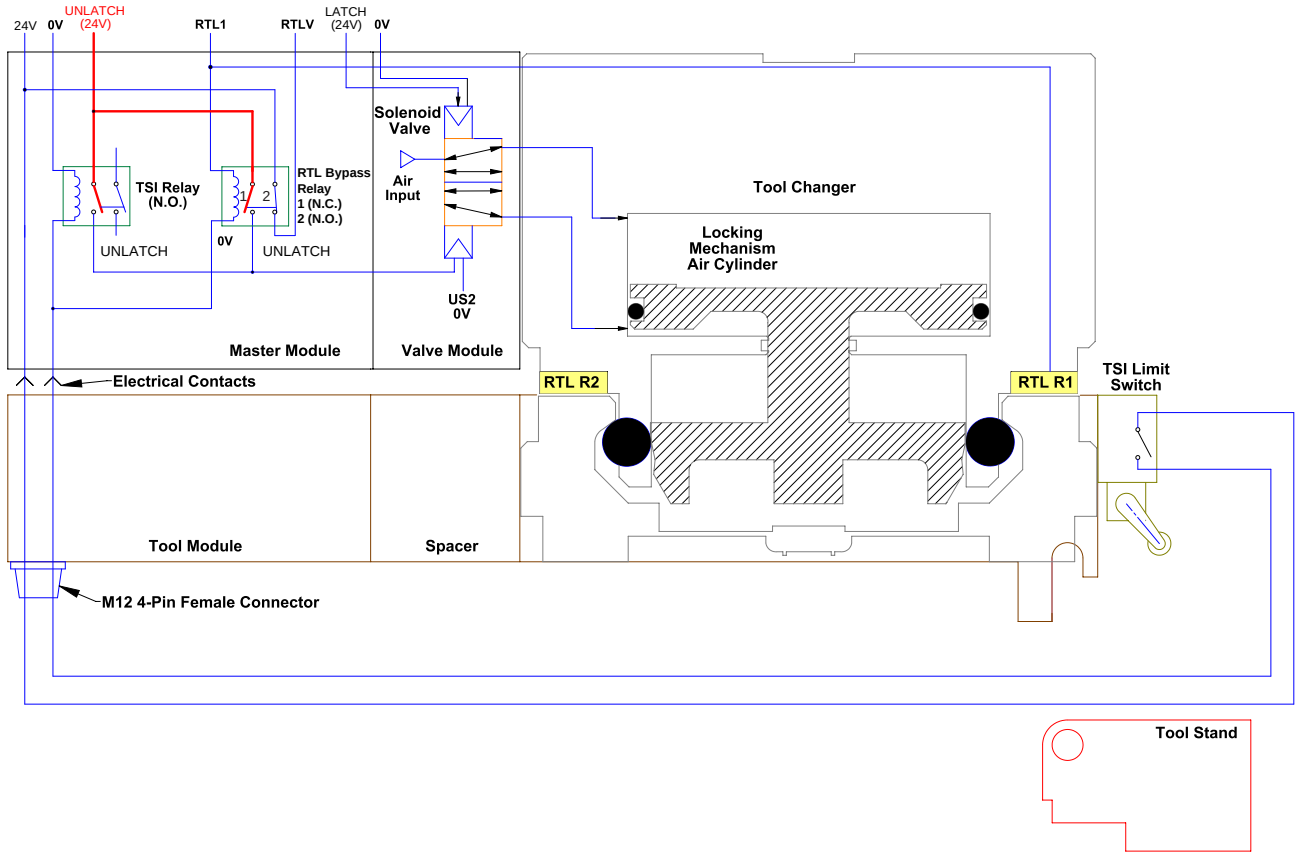

2.5.4 TSI Behavior for module with Firmware Version 2.52 or Later

The modules with firmware 2.52 or later, rely on the status of the Ready-To-Lock (RTL) sensors, the Tool Present Signal, and the TSIV input to determine when it is appropriate to unlatch the Tool. The Tool Present signal indicates If the Master and Tool are coupled while the TSIV input indicates when the TSI switch on the Tool is actuated, thereby indicating that the Tool is in the stand.

There is both a firmware and fasteners interrupt for the Unlatch output signal. Firmware compares the Tool Present signal with the TSIV input and enables the Unlatch output signal only If it meets the conditions in*Table 2.4*.

Table 2.4—UNLATCH Enable Logic and Truth Table

Tool Present	TSIV	UNLATCH Enabled	Status of Master Body
0	0	1	No Tool, positioned in the free air
1	0	0	Tool is present, positioned in the free air
1	1	1	Tool is present, positioned in the tool stand

For example, if the module receives an UNLATCH output signal and the Tool Present signal indicates that Master and Tool are coupled but the TSIV indicates that the Tool is not in the tool stand, then the UNLATCH output signal is ignored.

2.5.5 TSI Behavior for Module with Prior to Firmware Version 2.52

The modules with firmware prior to 2.52, rely on the status of the Ready-To-Lock (RTL) sensors and the TSIV input to determine when it is appropriate to unlatch the Tool. The RTL sensors indicate if the Master and Tool are coupled while the TSIV input indicates when the TSI switch on the Tool is actuated, thereby indicating that the Tool is in the stand.

There is both a firmware and hardware interrupt for the Unlatch output signal. Firmware compares the RTL sensor signals with the TSIV input and enables the Unlatch output signal only If it meets the conditions in *Table 2.5*.

Table 2.5—UNLATCH Enable Logic and Truth Table

RTL1 & RLT2	TSIV	UNLATCH Enabled	Status of Master Body
0	0	1	No Tool, positioned in the free air
0	1	1	No Tool, positioned in the tool stand (This is a transient state which is only true just prior to RTL being made)
1	0	0	Tool is present, positioned in the free air
1	1	1	Tool is present, positioned in the tool stand

For example, if the module receives an UNLATCH output signal and the RTL sensor signals indicate that Master and Tool are coupled but the TSIV indicates that the Tool is not in the tool stand, then the UNLATCH output signal is ignored.

2.6 Software

The EDS file for the Master node is available from ATI website (www.ati-ia.com/download/edsfiles) or by e-mail. Reference the following part number:

DKG-M Node EDS File 9031-20-1027

An I/O bitmap for the Master node is provided in following table. The default setting for the Master module is IP Address 136.129.1.1.

Table 2.6—I/O Bitmap, Robot Inputs from ATI Master, (9121-DKG-M), EtherNet Default IP Address 136.129.1.1.

Byte	Bit Number	Name	Description/Function
1	0	Locked	Tool Changer Locked Proximity Sensor Input
	1	Unlocked	Tool Changer Unlocked Proximity Sensor Input
	2	Input and Logic Power Good	Input and Logic Power Present Input
	3	Valve Power Available	Valve Power Present Input
	4	RTL1	Ready-to-Lock 1 Proximity Sensor Input
	5	RTL2	Ready-to-Lock 2 Proximity Sensor Input
	6	RTLV	Ready-to-Lock Verify Input
	7	-	(Reserved)
2	0	Tool-ID 1	Tool-ID
	1	Tool-ID 2	Tool-ID
	2	Tool-ID 4	Tool-ID
	3	Tool-ID 8	Tool-ID
	4	TSIV	TSI Limit Switch Verify
	5	TSRV	TSI Relay Verify
	6	Unlatch Enabled	Unlatched Enabled Status Information
	7	Tool Present	Hard-Connect Tool Present Input
3	0	-	(Reserved)
	1	-	(Reserved)
	2	Error on Latch Output	Latch output overloaded
	3	Error on Unlatch Output	Unlatch output overloaded
	4	-	(Reserved)
	5	-	(Reserved)
	6	-	(Reserved)
	7	-	(Reserved)
4	0	-	(Reserved)
	1	-	(Reserved)
	2	-	(Reserved)
	3	-	(Reserved)
	4	-	(Reserved)
	5	-	(Reserved)
	6	COMM OK	Indicates EtherNet/IP Connectivity is Established
	7	Tool Power Is ON	Indicates that Arc Prevention Circuit is turned on and power is provided to the Tool

Table 2.6—I/O Bitmap, Robot Inputs from ATI Master, (9121-DKG-M), EtherNet Default IP Address 136.129.1.1.			
Byte	**Bit Number**	**Name**	**Description/Function**
5-8	0	-	(Reserved)
	1	-	(Reserved)
	2	-	(Reserved)
	3	-	(Reserved)
	4	-	(Reserved)
	5	-	(Reserved)
	6	-	(Reserved)
	7	-	(Reserved)

Table 2.7—I/O Bitmap, Robot Outputs to 9121-DKG-M module, Ethernet Default IP Address 136.129.1.1.			
Byte	**BitNumber**	**Name**	**Description/Function**
1	0	Latch (Lock)	Latch Solenoid Valve Output
	1	Unlatch (Unlock)	Unlatch Solenoid Valve Output
	2	-	(Reserved)
	3	Clear Errors	Reset errors, allow affected I/O to be reactivated
	4	-	(Reserved)
	5	-	(Reserved)
	6	-	(Reserved)
	7	-	(Reserved)
2 - 8	(Reserved)		

3. Installation

The following steps outline the installation or removal. For wiring information refer to *Section 9—Drawings*.

WARNING: Do not perform maintenance or repair(s) on the Tool Changer or modules unless the Tool is safely supported or placed in the tool stand, all energized circuits (for example: electrical, air, water, etc.) are turned off, pressurized connections are purged and power is discharged from circuits in accordance with the customer specific safety practices and policies. Injury or equipment damage can occur with the Tool not placed and energized circuits on. Place the Tool in the tool stand, turn off and discharge all energized circuits, purge all pressurized connections, and verify all circuits are de-energized before performing maintenance or repair(s) on the Tool Changer or modules.

WARNING: All pneumatic fittings and tubing must be capable of withstanding the repetitive motions of the application without failing. The routing of electrical and pneumatic lines must minimize the possibility of over stressing, pullout, or kinking the lines. Failure to do so can cause critical electrical and/or pneumatic lines to malfunction and might result in injury to personnel or damage to equipment.

CAUTION: Thread locker applied to fasteners must not be used more than once. Fasteners might become loose and cause equipment damage. Always apply new thread locker when reusing fasteners.

3.1 Master Module Installation

Refer to *Figure 3.1*

Tools required: *5 mm Allen® wrench (hex key), torque wrench*

Supplies required: *Clean rag, Loctite® 242*

1. Place the Tool in a secure location.
2. Uncouple the Master and Tool plates.
3. Turn off and de-energize all energized circuits (e.g. electrical, air, water, etc.).
4. Clean the mounting surfaces.
5. Using the ledge feature, place the module into the appropriate location on the air or valve adapter. Align the module with the air or valve adapter using the dowels in the bottom of the ledge feature.
6. Apply Loctite 242 to the supplied M6 socket head cap screws. Install the (2) M6 socket head cap screws securing the module to the air or valve adapter using a 5 mm Allen wrench. Tighten to 70 in-lbs (7.9 Nm).
7. Set the DIP switches. Refer to *Section 2.1.6—DIP Switches on the Master Module*.
8. Connect the Lock (L), Unlock (U), RTL (R1), and RTL (R2) sensor cable to the control/signal module. Ensure that the connectors are cleaned prior to being secured.
9. Connect (e.g. power, signal, auxiliary, etc.) cables to the module. Ensure that the connectors are cleaned prior to being secured.
10. After the procedure is complete, resume normal operation.

Figure 3.1—DKG-M Module Installation

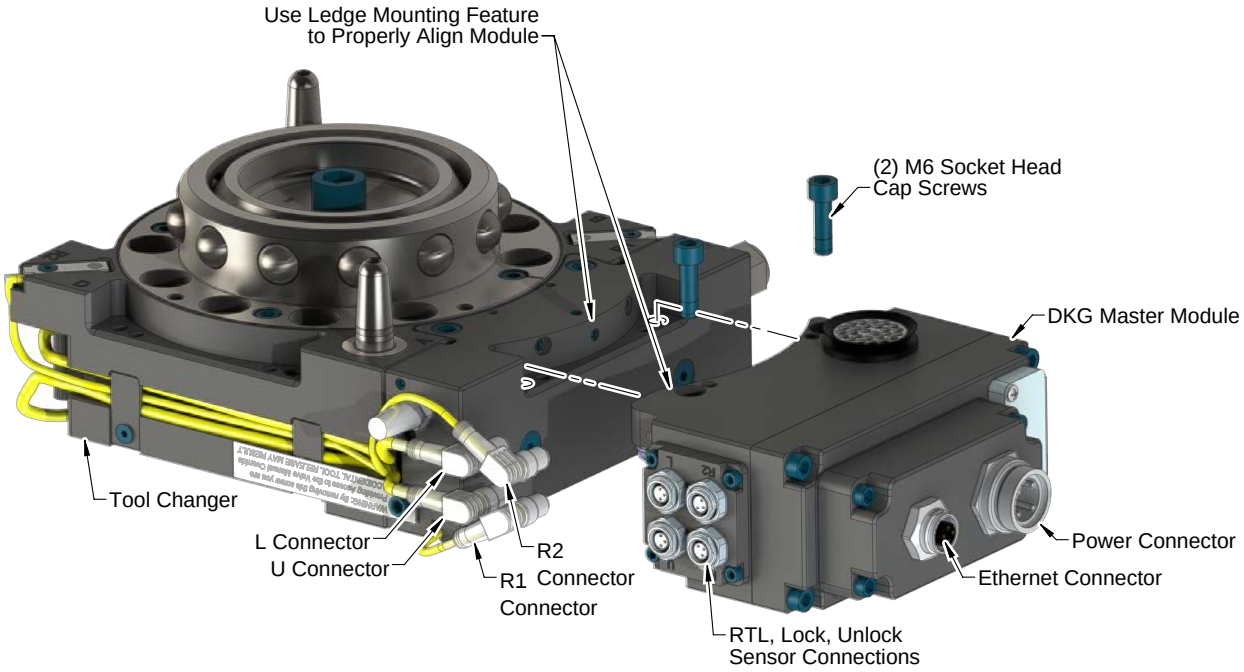

3.2 Master Module Removal

Tools required: *5 mm hex key*

1. Place the Tool in a secure location.
2. Uncouple the Master and Tool plates.
3. Turn off and de-energize all energized circuits (for example: electrical, pneumatic, and hydraulic circuits).
4. Mark the Lock, Unlock, and RTL sensor cables so that the cables can be reinstalled to the appropriate sensor.
5. Disconnect the Lock (L), Unlock (U), and RTL (R1), and RTL (R2) sensor cable connectors from the module.
6. Disconnect (for example: power, signal, auxiliary, etc.) cables from the control/signal module.
7. Support the control/signal module, remove the (2) M6 socket head cap screws using a 5 mm hex key, and lower the module until it clears the guide pin.

3.3 Tool Module Installation

Tools required: *5 mm Allen wrench (hex key), torque wrench*

Supplies required: *Clean rag, Loctite 242*

1. Place the Tool in a secure location.
2. Turn off and de-energize all circuits (e.g. electrical, air, water, etc).
3. Clean the mounting surfaces.
4. Using the ledge feature, place the module onto the air adapter. Align the module with the valve adapter using the dowels in the bottom of the ledge feature.
5. Apply Loctite 242 to the supplied M6 socket head cap screws. Install the (2) M6 socket head cap screws securing the module to the valve adapter using a 5 mm Allen wrench. Tighten to 70 in-lbs (7.9 Nm).
6. Connect (e.g. power, signal, auxiliary, etc.) cables to the module. Ensure that the connectors are cleaned prior to being secured as appropriate.
7. Connect the cable from the TSI limit switch to the control/signal module. Ensure that the connectors are cleaned prior to being secured as appropriate.
8. Set the Tool-ID. Refer to *Section 3.7—Setting the Tool-ID.*
9. After the procedure is complete, resume normal operation.

Figure 3.2—DKF-T Module Installation

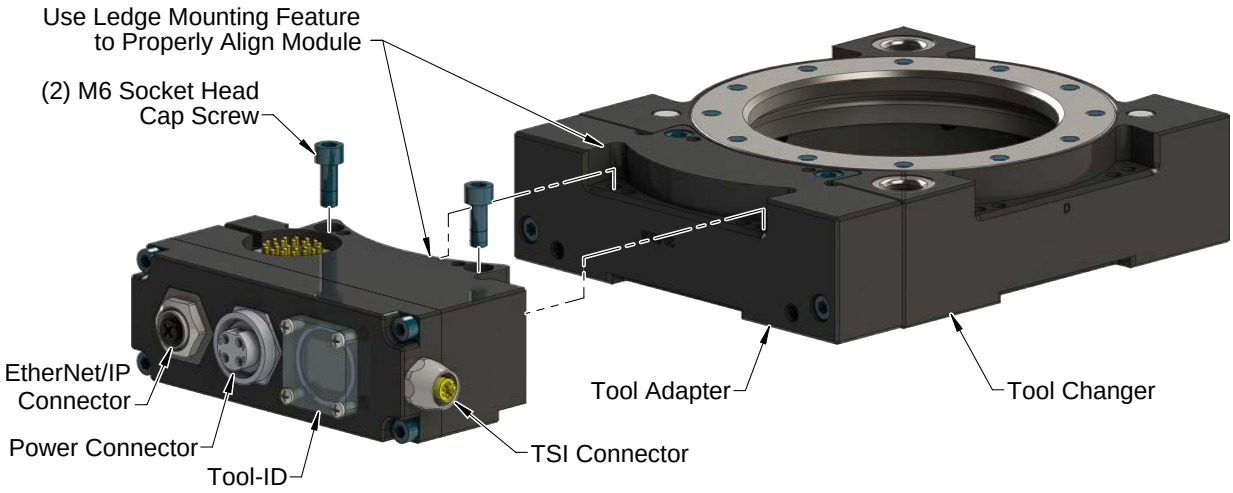

3.4 Tool Module Removal

Tools required: *5 mm hex key*

1. Place the Tool in a secure location.
2. Uncouple the Master and Tool plates.
3. Turn off and de-energize all energized circuits (for example: electrical, pneumatic, and hydraulic circuits).
4. Disconnect (for example: power, signal, auxiliary, etc.) cables from the control/signal module.
5. Disconnect the cable from the control/signal module to the TSI limit switch.
6. Support the control/signal module, remove the (2) M6 socket head cap screws using a 5 mm hex key, and lift the module from the valve adapter.

3.5 EtherNet/IP Configuration

Several parameters for the EtherNet/IP modules need to be configured prior to operating the Tool Changer. Please refer to *Section 2—Product Information* of this manual for detailed information on the installation and operation of the EtherNet/IP modules.



CAUTION: Ethernet cabling layout is critical to the overall performance of the system. Interface connections from the controller up the robot arm to the ATI Master should be minimized (less than 3 connections, e.g.). Use of hi-flex, robot rated cable is essential for long term performance.



CAUTION: Connect Earth Ground only at the power supply. Additional connections (e.g. inside of the robot arm) will cause ground loops and can lead to excessive noise on the power supply. This can result in the (FCS) frame checking sequence and alignment errors in the Ethernet data packets.

3.6 Utility Schematic

Refer to drawings in *Section 9—Drawings* of this manual for customer interface and wiring details for the modules.

3.7 Setting the Tool-ID

Tools required: *Phillips screwdriver*

Use the push button switches on the Tool Module to set a Tool-ID number (0-9).

1. Loosen (4) M3 pan head captive screws and remove the Tool-ID window.

Figure 3.1—Set Tool-ID

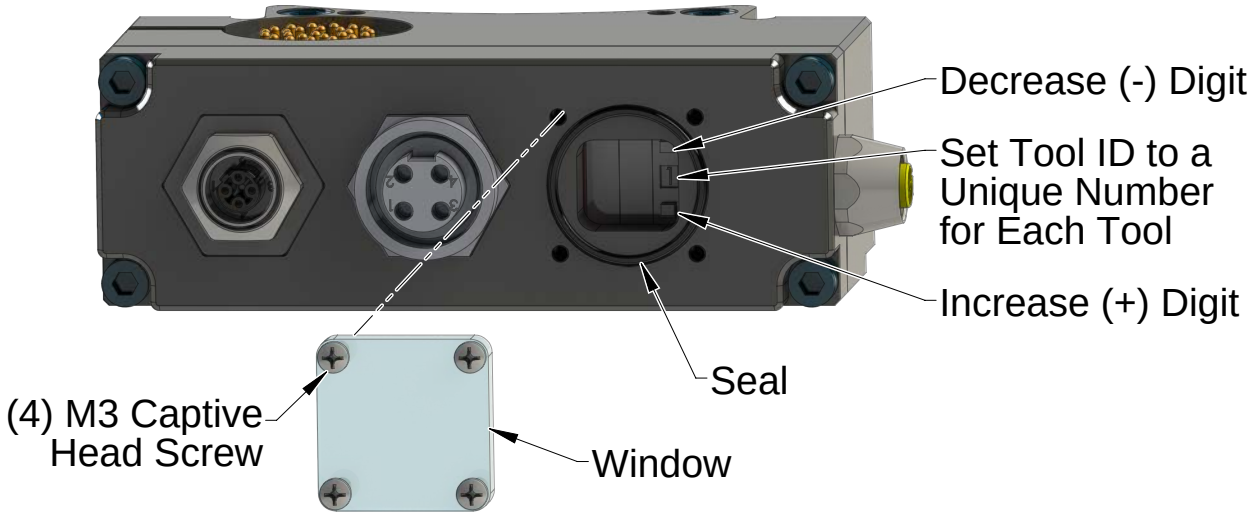

2. Use a non-conductive tool (e.g., plastic stylus) to press on the Tool-ID push buttons to increase (+) or decrease (-) the digit value. Set the Tool-ID to the assigned digit number (0-9). Refer to *Section 9—Drawings* for the Tool-ID output tables.

NOTICE: After adjustment is completed, ensure that the seal and window are re-positioned correctly to prevent a leakage path to inside the module.

3. Re-install the Tool-ID window and tighten the (4) M3 pan head captive screws using a phillips screwdriver.

4. Operation

The control/signal module controls the Tool Changer and passes electrical power, signals, and field bus data to the customer tooling. The module works with specific industrial servo motors and drives, to provide a separable joint in the power and signal wiring. To maximize the service life of these components, the following points should be observed:

DANGER: This module has a voltage of 50V or greater; always remove power before contacting the module. Arcing and damage occur if power is not removed from the module during maintenance or service. Always remove power before attaching or disconnecting cables, separating or inserting the mating couplers, or making any contact with the Tool Changer or Utility Coupler.

CAUTION: Improper cable routing can result in wires and cables being pinched in the joint between the Tool Changer plates and premature failure of the electrical connectors. Properly route and secure all cables, particularly on the Master side.

The following sections detail the functional characteristics of the module.

NOTICE: The 0 and 24 VDC supply lines are required to be on the certain pin locations of the customer interface connector. Refer to *Section 9—Drawings* for pin out information and location of the I/O signals.

Refer to the specific Tool Changer manual for coupling conditions of the Tool Changer and *Section 4.2—Recommended Sequence of the Operation*. When coupled, the module Tool can be communicated with, Tool-ID can be read (If equipped), and attached end-effectors can be used.

A Recommended Sequence of Operations is provided in Appendix an of this manual. This procedure is to be used as a general guide when programming a robot or PLC for use with a Tool Changer and DKG control/signal modules. This procedure is intended for “automatic” modes used during normal application processes.

4.1 Lock, Unlock, and RTL Sensor Cable LED Behavior

The Lock, Unlock, and RTL sensor cables are equipped with two LEDs. The Green LED indicates the sensor has power and the yellow LED indicates the switch has been made. The LED behavior is affected by the control/signal module.

Table 4.1—Sensor Cable LED Behavior for Common Tool Changer Positions

Tool Changer Position	Sensor cable LED Behavior			
Unlocked (Tool Changer Master plate free of stand with no Tool plate attached)	RTL (R1) Sensor	ON / OFF	ON / ON	Unlock (U) Sensor
	RTL (R2) Sensor	ON / OFF	ON / OFF	Lock (L) Sensor
Ready to Lock (Tool Changer Master plate with Tool plate parallel and at a distance of 1.22 mm or less from each other)	RTL (R1) Sensor	ON / ON	ON / ON	Unlock (U) Sensor
	RTL (R2) Sensor	ON / ON	ON / OFF	Lock (L) Sensor
Locked (Tool Changer Master plate with Tool plate attached in fully locked position)	RTL (R1) Sensor	ON / ON	ON / OFF	Unlock (U) Sensor
	RTL (R2) Sensor	ON / ON	ON / ON	Lock (L) Sensor
Missed Tool (Tool Changer Master plate locked with no Tool plate attached)	RTL (R1) Sensor	ON / OFF	ON / OFF	Unlock (U) Sensor
	RTL (R2) Sensor	ON / OFF	ON / OFF	Lock (L) Sensor

Figure 4.1—Lock, Unlock, and RTL Sensor cable LED Behavior (Shown in Locked Position)

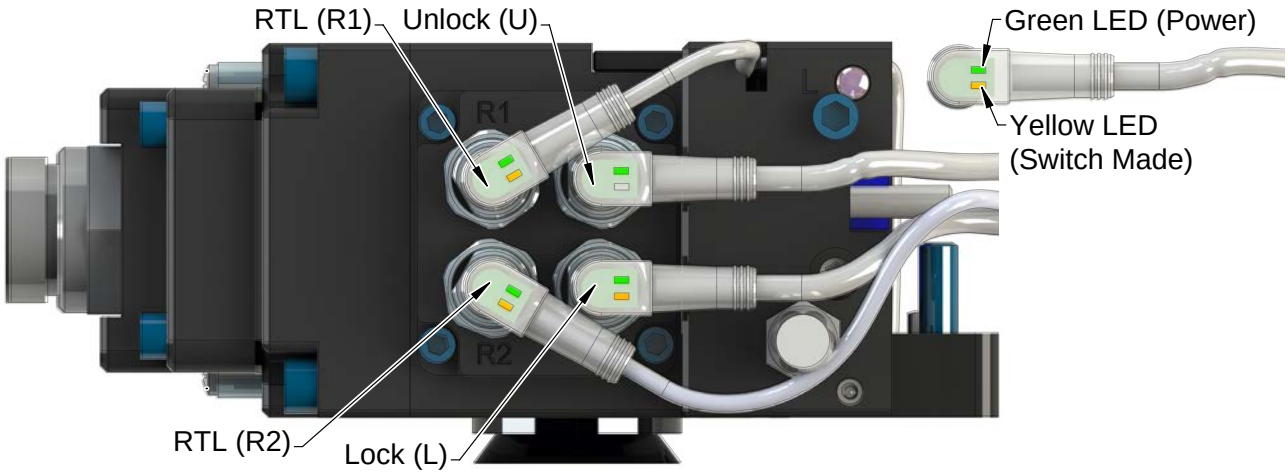

(Control module shown for reference only)

4.2 Recommended Sequence of the Operation

1. The robot and Tool Changer Master are free of the stand or storage location, the Tool Changer is uncoupled and the Tool Changer locking mechanism is fully retracted (unlocked condition). The Tool is by itself in the tool stand. No error or fault conditions exist.

    a. The **RTL** inputs (RTL1 & RTL2) are OFF.
    b. The **RTLV** input is OFF.
    c. The ATI Tool and any downstream device are offline.
    d. The **Input and Logic Power Good** is ON. The **Valve Power Available** input is ON the provided the Switched auxiliary power supply is on.
    e. The **Tool Power Is ON** input is OFF.
    f. The **TSIV** input is OFF.

2. Unlock the Master. (This must be done prior to the Master entering the Tool to prevent the ball bearings from impinging on the Tool bearing race.)

    a. Turn the **Latch** output OFF and turn the **Unlatch** output ON.
    b. The **Locked** input turns OFF and a short time later the **Unlocked** input goes ON and remains ON, indicating that the Tool Changer locking mechanism is fully retracted and the Unlatch operation is complete.

3. Robot and Master move into the tool, are parallel and within 0.15” of the tool (i.e., the module contact pins meet but the **RTL** sensors have not yet sensed the targets on the tool).

    a. The **Tool Present** and **TSIV** inputs are ON, indicating that the Master and Tool are in the close proximity of each other and verifying the operation of the **TSI limit switch**.
    b. When the **Tool Present** input is ON, **Tool-ID** is available within 50 ms.
    c. Power is not yet available on the Tool. The bit **“Tool Power is On”** is OFF.

4. Robot and Master move into the tool, are parallel and within 0.06” of the Tool

    a. The **RTL** sensors are ON, indicating that its ok to couple Tool.
    b. The **RTLV** is true.

5. Couple the Tool Changer.

    a. Turn the he **Unlatch** output OFF and turn the **Latch** output is made ON. (Note: Even for units with single solenoids the **Latch** output must be turned ON.)
    b. With the **Latch** output ON, Power is available on the Tool and the **“Tool Power is ON”** input turns on.
    c. The **Unlocked** input is OFF a short time later, indicating piston travel. Subsequently, the **Locked** input is on and remains ON, indicating that the coupling operation is complete.
    d. Sometime thereafter, communications should be established with the downstream Ethernet device(s). (The time it takes to establish connection with a downstream EtherNet/IP node depends on the power up and reconnect time of the individual EtherNet/IP equipment that is installed on the tool.)

6. Robot moves away from the tool stand with the Tool Changer coupled.

    a. The **TSI Limit Switch** is deactivated, and the **TSIV** input goes OFF.
    b. The **Unlatch Enabled** turns OFF.

7. Normal operation

   a. The following inputs are ON:
      i. **Locked**
      ii. **Input and Logic Power Good**
      iii. **Valve Power Available**
      iv. **RTL** (RTL1 & RTL2)
      v. **Tool Present**
      vi. **Tool Power is On**
      vii. **RTLV**

   b. The following inputs are OFF:
      i. **Unlocked**
      ii. **TSIV**
      iii. **Unlatch Enabled**

   c. The following output is ON:
      i. **Latch**

   d. The following output is OFF:
      i. **Unlatch**

8. Robot moves into the tool stand with the Tool Changer coupled.

   a. When the tool is returned to the stand, the **TSI Limit Switch** is activated and the TSIV input goes ON.

   b. The **Unlatch Enabled** is ON, indicating that it is safe to uncouple the Tool Changer.

9. Uncouple the Tool Changer.

   a. Turn the **Latch** output OFF and the **Unlatch** output ON.

   b. The **Tool Power Is ON** input turns OFF and power on the Tool turns off.

   c. Communication is lost with downstream device(s).

   d. The **Locked** input turns OFF a short time later the **Unlocked** input turns ON, indicating that the uncoupling operation is complete.

10. Robot and Master move away from the tool, are parallel at a distance greater than 0.15” from the tool.

    a. The **Tool Present** and **TSIV** inputs turn OFF.

    b. The **Tool-ID** is unavailable (all 1 → 0xF).

11. Robot and Master are in the free space

    a. The following inputs are ON:
       i. **Unlocked**
       ii. **Input and Logic Power Good**
       iii. **Valve Power Available**
       iv. **Unlatch Enabled**

    b. The following inputs are OFF:
       i. **Locked**
       ii. **RTL** (RTL1 & RTL2)
       iii. **RTLV**
       iv. **TSIV**
       v. **Tool Present**

    c. The following outputs are ON:
       i. **Unlatch**

    d. The following outputs are OFF:
       i. **Latch**

5. Maintenance

The modules are not designed to be field serviced as all point-to-point wiring connections are soldered. Component replacement is limited to the V-ring seal on the Master.

WARNING: Do not perform maintenance or repair(s) on the Tool Changer or modules unless the Tool is safely supported or placed in the tool stand, all energized circuits (for example: electrical, air, water, etc.) are turned off, pressurized connections are purged and power is discharged from circuits in accordance with the customer specific safety practices and policies. Injury or equipment damage can occur with the Tool not placed and energized circuits on. Place the Tool in the tool stand, turn off and discharge all energized circuits, purge all pressurized connections, and verify all circuits are de-energized before performing maintenance or repair(s) on the Tool Changer or modules.

If the Tool Changer is used in dirty environments (for example: welding or deburring applications), limit the exposure of the Tool Changer. Idle Tool assemblies should be covered to prevent debris from settling on the mating surface. Also, the Master assembly should be exposed for only a short period of time during Tool change and down time.

Under normal conditions, no special maintenance is necessary; however, perform periodic inspections to assess for unexpected damage and assure long-lasting performance. Perform the following visual inspection monthly:

- Inspect mounting fasteners to verify they are tight and If loose, then tighten to the proper torque. Refer to *Section 3—Installation.*
- Cable connections should be inspected during maintenance periods to ensure they are secure. Loose connections should be cleaned and re-tightened as appropriate. Inspect cable sheathing for damage, repair or replace damaged cabling. Loose connections or damaged cabling are not expected and may indicate improper routing and/or strain relieving.
- Inspect the Master and Tool pin blocks for any pin damage, debris or darkened pins. Refer to *Section 5.1—Pin Block Inspection and Cleaning.*
- Inspect the V-ring seals for wear, abrasion, and cuts. If worn or damaged, replace. Refer to *Section 6.3.1—V-ring Seal Replacement*.

5.1 Pin Block Inspection and Cleaning

Tools required: *Nylon Brush (ATI part number 3690-0000064-60)*

1. Place the Tool in a secure location.
2. Uncouple the Master and Tool plates.
3. Turn off and de-energize all energized circuits (for example: electrical, pneumatic, and hydraulic circuits).
4. Inspect the Master and Tool pin blocks for debris or darkened pins.

Figure 5.1—Inspect Master and Tool Pin Blocks



5. If debris or darkened pins are present, use a vacuum to remove the debris, and clean using a nylon brush (ATI part number 3690-0000064-60).

NOTICE: Do not use an abrasive media and/or cleaners or solvents to clean the contact pins. Using abrasive media and/or cleaners or solvents will cause damage to the contact surface or cause pins to stick. Clean contact surfaces with a vacuum or non-abrasive media such as a nylon brush (ATI part number 3690-0000064-60).

Figure 5.2—Clean Pin Blocks with a Nylon Brush



6. Inspect the Master and Tool pin blocks for stuck pins or pin block damage.

Figure 5.3—Stuck Pin and Pin Block Damage

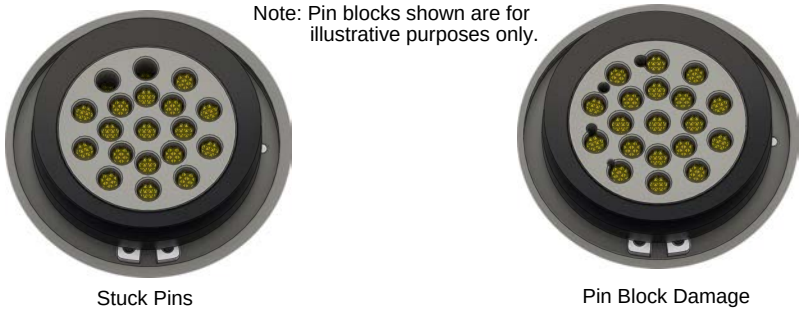

7. If pins become stuck or if there is damage to the pin block, contact ATI for either a possible pin replacement procedure or module replacement.
8. Safely resume normal operation.

6. Troubleshooting and Service Procedures

The following section provides troubleshooting and service information to help diagnose conditions and repair the Tool Changer or control/signal module.

DANGER: This module has a voltage of 50V or greater; always remove power before contacting the module. Arcing and damage occur if power is not removed from the module during maintenance or service. Always remove power before attaching or disconnecting cables, separating or inserting the mating couplers, or making any contact with the Tool Changer or Utility Coupler.

WARNING: Do not perform maintenance or repair(s) on the Tool Changer or modules unless the Tool is safely supported or placed in the tool stand, all energized circuits (for example: electrical, air, water, etc.) are turned off, pressurized connections are purged and power is discharged from circuits in accordance with the customer specific safety practices and policies. Injury or equipment damage can occur with the Tool not placed and energized circuits on. Place the Tool in the tool stand, turn off and discharge all energized circuits, purge all pressurized connections, and verify all circuits are de-energized before performing maintenance or repair(s) on the Tool Changer or modules.

CAUTION: Thread locker applied to fasteners must not be used more than once. Fasteners might become loose and cause equipment damage. Always apply new thread locker when reusing fasteners.

6.1 Troubleshooting Procedures

The troubleshooting table is provided to assist in the diagnosing issues that may cause the module or Tool Changer to not function properly.

Table 6.1—Troubleshooting

Pre-Troubleshooting Checklist:

- Check the product upstream and downstream of the Tool Changer for failure. This failure can "appear" to be caused by the Tool Changer or affect Tool Changer performance.
- Check for debris between the mating surfaces or contact pins. Refer to *Section 5.1—Pin Block Inspection and Cleaning*.
- Check for damaged cables or connectors.
- Check the appropriate power being supplied to the modules. Refer to *Section 8—Specifications*.
- Check the appropriate air pressure is supplied to the valve adapter. Refer to Valve Adapter manual.
- Check that the proper command was issued (Latch or Unlatch).

Symptom	Possible Cause	Correction
Unit will not lock or unlock.	Ball bearings are not moving freely.	Refer to the Maintenance section of the Tool Changer manual for instructions.
	Valve adapter exhaust muffler is clogged.	Replace the valve adapter muffler. Refer to the valve adapter manual for more information.
	TSI switch not functioning.	Replace the TSI switch.
	Signals are mapped incorrectly.	Refer to *Section 9—Drawings* for electrical schematic.
	Master and Tool are not within the specified No-Touch zone.	Adjust the Master and Tool within No-Touch zone before locking. Refer to Tool Changer manual for more information.
	Solenoid valve is not functioning.	Replace the valve or valve adapter. Refer to the valve adapter manual.
Sensors are not operating but EtherNet/IP is operating.	Valve adapter exhaust muffler is clogged.	Replace the valve adapter muffler. Refer to the valve adapter manual for more information.
	Sensors are not set correctly or not functioning.	Refer to the Troubleshooting Section of the Tool Changer manual.
	Sensor cables damage or incorrectly connected.	Verify the cables are connected correctly and not damaged, replace if damaged. Refer to the Troubleshooting Section of the Tool Changer manual.
Loss of communication with the modules.	No power to the Master module.	Verify that (input and logic) power is connected and available (Input and Logic Power Good bit is ON).
	Worn or damaged contact pins.	Contact ATI representative.
No power on the Tool module.	Latch output was not issued	Verify the Latch output is ON.
	Tool Present bit is OFF.	Verify the **Tool Present** bit is ON
		TSI cables or switch needs replaced.
	Tool Power is ON bit is OFF.	Verify the **Tool Power is ON** bit is ON. Contact ATI representative.
	Loss of power on the Master will cause loss of auxiliary power to the Tool.	Restore power to the Master.

6.2 Diagnostic Functions and Error Handling

There are several diagnostic functions that can have an effect on the input bitmap and influence the Tool Changer control.

6.2.1 Power Status

The DKG module continuously monitors the voltage of the its interface and sensor power supply. If the voltage is between 11 V and 28.8 V the “Input and Logic Power Good” bit will be high. If the voltage falls outside of this range the “Input and Logic Power Good” bit will be low and will remain low until the voltage is between 11 V and 28.8 V and the Clear Errors output has been set from the low to high.

Note: The Tool Changer will not Unlatch while the “Input and Logic Power Good” bit is low.

6.2.2 Valve Power Status

The DKG module continuously monitors the voltage of the switched Auxiliary power which is used to supply the lock and unlock solenoid valves of the Tool Changer. If the voltage stays above 21 V the “Valve Power Available” bit will be set high. If the voltage falls below the 21 V threshold the bit will be set low. It will become high again as soon as the voltage rises above 21 V.

6.2.3 Error on the Latch or Unlatch Output

The valve control outputs of the DKG module are protected against overload conditions such as those created by a short circuit. During an overload condition LATCH and/or UNLATCH output is turned off and the corresponding error bit “Error on Latch Output” or “Error on Unlatch Output” is turned on. The output cannot be set high again until the overload condition is removed and the “Clear Errors” bit is set from the low to high.

6.2.4 “COMM OK” bit

The “COMM OK” is set high as soon as Ethernet/IP communication is established.

6.2.5 “Tool Power is On” bit

The “Tool Power is ON” bit is set high when the Arc Prevention Circuit has activated power on the Tool-side. If the this bit is low there will be no power available on the Tool.

6.2.6 “Unlatch Enabled” bit

The “Unlatch Enabled” bit is set high when the DKG module determines that the necessary preconditions for unlatching the Tool have been met (Tool is in the tool stand, etc.). A Tool can only be released If the “Unlatch Enabled” bit is high. For additional details refer to *Section 2.4—Tool Side TSI.*

6.3 Service Procedures

While performing maintenance, you might find parts that require service or replacement. Use the following steps to inspect and replace serviceable parts.

6.3.1 V-ring Seal Replacement

The seal protects the electrical connection between the Master and Tool module. Replace the seal if it becomes worn or damaged.

1. Place the Tool in a secure location.
2. Uncouple the Master and Tool plates.
3. Turn off and de-energize all energized circuits (for example: electrical, pneumatic, and hydraulic circuits).
4. To remove the existing seal, pinch the edge of the seal and pull the seal away from the pin block on the Master module.
5. To install a new seal, stretch the new seal over the shoulder of the pin block.
6. Push the seal hub down against the pin block.
7. Safely resume normal operation.

Figure 6.1—V-ring Seal Replacement

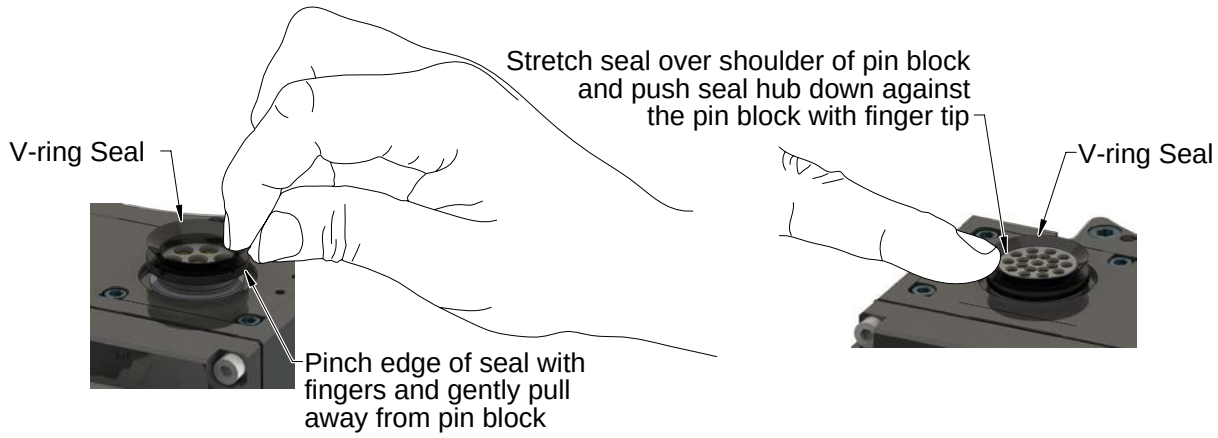

7. Serviceable Parts

Refer to *Section 9—Drawings.*

Table 7.1—Master module Mounting Fasteners	
Part Number	**Description**
3500-1066020-21A	M6 x 20 Socket Head Cap Screw, SS, ND Microspheres, 0-3 uncoated lead thds. 5-7 coated thds. IFI525

Table 7.2—Tool module Mounting Fasteners	
Part Number	**Description**
3500-1066016-21A	M6 x 16 Socket Head Cap Screw, DIN 912 A4 S/S (316) ND Ind. Microspheres Epoxy, Yellow. 0-3 uncoated lead thds. 5-7 coated thds.

Table 7.3—Accessories	
Part Number	**Description**
3690-0000064-60	Brush, Blue Nylon All Purpose (Contact Pin Cleaning)

8. Specifications

Table 8.1—DKG Master Module Specifications	
9121-DKG-M	EtherNet/IP Master module with integrated Ethernet switch, supports DHCP functionality and EtherNet/IP Quick Connect, Input/Logic Power and Output Power pass-through, TSI on Tool. M12 D-coded Female Connector for Ethernet communication, Mini 4-Pin Male Connector for Input/Logic Power and Output Power. Lock, Unlock and RTL sensing with LED cables on the Master and Tool-ID from the Tool module are also supported. Arc Prevention Circuit applied to Input/Logic Power as well as Output Power.
Default Configuration	I/P Address: 136.129.1.1 Subnet Mask: 255.255.255.0 Gateway: 0.0.0.0 **Note:** The DKG-M, DKF-T, DKQ-T modules conform to the EtherNet/IP Adaptation of the CIP Specification, Edition 1.12; © 2011, ODVA The DHCP option is factory set to “disabled”
Connector(s)	Logic and Input power: 4-pin Mini, male EtherNet: 4-pin M12 D-coded, female Integrated Tool Changer I/O: (4) M8, 3-pin female connectors supporting Tool Changer Locked, Unlocked, and Ready-to-Lock proximity sensors. Integrated Connection to valve adapter: 3-pin Pin Block supporting Latch and Unlatch signals
Pass through Signals	5 A, 24 VDC maximum
Current Draw	Power: 180 mA @ 24 VDC, Master only (Unlocked sensor “ON”, Locked, RTL1 & RTL2 “OFF”) Valve Power (switched Auxiliary Power): 250 mA @ 24 VDC (Solenoid Valve) (only when locking or unlocking Tool Changer).
Temperature	32°F to 120°F (0 to 49°C).
Weight	2.05 lbs (0.93 kg)

Table 8.2—DKF Tool Module Specifications	
9121-DKF-T	EtherNet/IP Tool module supports 0-9 Tool-ID through the Master module, Ethernet port, and auxiliary power pass through, TSI on the Tool. M12 D-coded Female Connector for Ethernet communication, Mini 4-pin Female Connector for switched and un-switched auxiliary Power, M12 4-pin Female Connector provided to support TSI on the Tool.
Default Configuration	A Independent Tool-ID switch, reading a (0–9) position (all factory set to Tool Position 1)
Connector(s)	DCIO Auxiliary Power: 4-pin Mini, female EtherNet: 4-pin M12 D-coded, female Connection to TSI Switch: 4-pin M12, female connector supporting connection to limit safety switch.
Pass through Signals	5 A, 24 VDC maximum
Tool-ID	A push button switch reading 0–9 positions (Refer to I/O map).
Temperature	32°F to 120°F (0 to 49°C).
Weight	1.35 lbs (0.61 kg)

Table 8.3—DKQ Tool Module Specifications	
9121-DKQ-T	EtherNet/IP Tool module supports 0-9 Tool-ID through the Master module, Ethernet port, and auxiliary power pass-through, TSI on the Tool supporting RFID based Safety Switch. M12 D-coded Female Connector for Ethernet communication, Mini 4-Pin Female Connector for switched and un-switched auxiliary Power, M12 5-Pin Female Connector provided to support TSI on the Tool.
Default Configuration	A Independent Tool-ID switch, reading a (0–9) position (all factory set to Tool Position 1)
Connector(s)	DCIO Auxiliary Power: 4-pin Mini, female EtherNet: 4-pin M12 D-coded, female Connection to TSI Switch: 5-pin M12, female connector supporting connection to Euchner switch.
Pass through Signals	5 A, 24 VDC maximum
Tool-ID	A push button switch reading 0–9 positions (Refer to I/O map).
Temperature	32°F to 120°F (0 to 49°C).
Weight	1.36 lbs. (0.62 kg)

9. Drawings

Drawings are available on the *ATI website* or by contacting an ATI representative.