Table of Contents

Glossary **C-4**

C. Control and Signal Modules **C-6**

DKR—Ethernet/IP Control/Signal Module **C-6**

1. Product Overview **C-6**

1.1 DKR Master Module **C-6**

1.2 DKR Tool Module **C-7**

2. Product Information **C-8**

2.1 Master Module Information **C-8**

2.1.1 Class 1 Connection Information C-8

2.2 Integrated Web Server **C-9**

2.2.1 Home Page C-9

2.2.2 Settings Page C-10

2.2.2.1 Configure the Master Module Network Settings to the Defaults Values C-11

2.2.2.2 Configure the Master Module Network Settings Using the Values Entered into the Setting Page C-12

2.2.2.3 Configure the Master Module Network Settings Using Values Entered into the Setting Page and the last Octet of the IP address from the DIP Switches ... C-13

2.2.2.4 Configure the Module Network Settings Using a DHCP Server C-15

2.2.3 Diagnostics Page C-16

2.2.4 Network C-18

2.2.4.1 Robot Side Port: C-18

2.2.4.2 Tool Side Port: C-18

2.2.5 OK to Latch C-20

2.2.6 OK to Unlatch C-22

2.2.7 DIP Switches on the Master Module C-24

2.2.8 Module and Network Status LED C-25

2.2.9 Using Ethernet/IP Quick Connect C-27

2.3 Arc Prevention Circuit **C-28**

2.3.1 Arc Prevention Circuit Behavior during Coupling C-28

2.3.2 Arc Prevention Circuit Behavior during Uncoupling C-29

2.4 Tool Module **C-30**

2.4.1 Tool-ID C-30

2.4.2 Tool Module DIP Switches C-30

2.4.3 Thermal 1 and Tool Input 2 Connectors C-30

2.5 For Your Safety C-31
2.5.1 Safety System Description C-31
2.5.2 Applicable Safety Standards and Technical Data C-33
2.5.3 Qualified Personnel C-33
2.5.4 Power Supply C-33
2.5.5 Safety Switches C-34
2.5.6 Intended Use C-34
2.5.7 Foreseeable Misuse C-35
2.5.8 Safety Checks C-35
2.6 Software C-36
3. Installation C-41
3.1 Master Module Installation C-41
3.2 Master Module Removal C-42
3.3 EtherNet/IP Configuration C-42
3.4 Utility Schematic C-42
3.5 Tool Module Installation C-43
3.6 Tool Module Removal C-43
3.7 Setting the Tool-ID C-44
4. Operation C-46
4.1 Lock, Unlock, and Read-To-Lock (RTL) Sensor Cable LED Behavior C-47
4.2 Inputs C-48
4.2.1 Tool Latched C-48
4.2.2 Tool Unlatched C-48
4.2.3 OK To Latch C-48
4.2.4 OK To Unlatch C-48
4.2.5 Tool Present C-48
4.2.6 Safe SW Missing C-48
4.2.7 Ready-To-Lock 1 and Ready-To-Lock 2 ..... C-48
4.2.8 Tool Power Is ON C-48
4.2.9 Output Power Available C-49
4.2.10 Valve Proximity Sensor C-49
4.2.11 Thermal 1 Input C-49
4.2.12 Everything Is OK C-49
4.2.13 TSI1 and TSI2 ..... C-50
4.2.14 TSI1 Relay and TSI2 Relay C-50
4.2.15 Input Power Available C-50
4.2.16 Tool Input 2 ..... C-50

4.3 Error Conditions C-50
4.3.1 Valve Error C-50
4.3.2 Pressure Too High C-50
4.3.3 Pressure Too Low C-50
4.3.4 Pressure Sensor Disconnected C-50
4.3.5 Tool-ID Error C-50
4.3.6 System Is Unsafe C-50
4.3.7 Unsafe Latch C-51
4.3.8 Unsafe Unlatch C-51
4.3.9 Error On Latch C-51
4.3.10 Lock/Unlock Sensor Fault C-51
4.4 Recommended Sequence of Operation C-52
5. Maintenance C-57
5.1 Pin Block Inspection and Cleaning C-58
6. Troubleshooting and Service Procedures C-59
6.1 Troubleshooting C-59
6.2 Service Procedures C-62
6.2.1 Seal Replacement C-62
7. Serviceable Parts C-63
7.1 Master Module Mounting Fasteners C-63
7.2 Tool Module Mounting Fasteners C-63
7.3 Accessories C-63
8. Specifications C-64
9. Drawings C-66

Glossary

Term	Definition
AP1 INP MISMATCH	Mismatch errors happens, if any safety inputs do not match the equivalent or complimentary inputs during the same state.
AP1 OUTP MISMATCH	Internal bit which indicates that AP1 has detected a safety critical error.
AP2 Comm Error	AP1 lost communication to AP2.
AP2 Mismatch Error	Internal bit which indicates that AP2 detects a mismatch with AP1 of the discrete inputs or that AP2 came to a different safety decision than AP1.
AP2 Safety Error	Internal bit which indicates that AP2 has detected a safety critical error.
AP2 VALVE ERROR	Position sensor does not meet expectations.
Application Processor 1 (AP1)	A board inside the DKR module which controls solenoid outputs, monitors function of the unlatch valves for pressure and position, safety checking and diagnostics, reports sensor status, protects outputs against short circuit overload, detects and reports status of the 24V power supply, and provides cross monitoring of the pressure processor board.
Application Processor 2 (AP2)	A board inside the DKR module which controls Unlatch Valve 2, reports the pressure inside the valve module, and provides cross monitoring of the Application Processor 1.
Clear Errors	An output supplied to the ATI Master to clear all applicable error conditions.
Cross Monitoring Error	Safety system detected mismatch.
EDS file	Simple text files used by network configuration tools to help identify products and easily commission them on the network.
EOAT	End Of Arm Tool (end effector).
Error on Latch	An input indicating a short circuit overload condition exists with the Latch Output.
Error on Unlatch1	An input indicating a short circuit overload condition exists with the Unlatch1 Output.
Error on Unlatch2	An input indicating a short circuit overload condition exists with the Unlatch2 Output.
Ethernet Switch	An Ethernet network component connecting multiple communication partners.
Everything is OK	Everything is OK indicates that there are no detected errors in general, not just errors that affect unlatch.
Firmware Version Mismatch	Firmware Version Mismatch detected.
Input Power Available	An input indicating input 24VDC is present.
Latch	The output supplied to the ATI Master module to couple the Tool Changer.
Lock/Unlock Sensor Fault	An input indicating that the Locked and Unlocked inputs are high at the same time.
Missed Tool	The locking mechanism has been actuated with no Tool present and both the locked and unlocked signals are read as “off” (false), then a “missed tool” condition has likely occurred. Refer to Table 6.1.
OK to Latch	Indicates it is safe to proceed with a latch request.
OK To Unlatch	Indicates it is safe to proceed with an unlatch request.
Output Power Available	An input indicating output 24VDC is present.
PLC	Program logic controller.
Power Cycle	Turn off power then restore power to the module, this will cause the network setting to be loaded upon power up on the module.
PRESSURE DISCONNECTED	Internal bit indicating that the pressure sensor is disconnected and/or that there are broken wires in the sensor cable.
Pressure Sensor Disconnected	An error condition that indicates the pressure sensor is disconnected and/or the sensor cable is damaged.
Pressure Too High	Pressure sensor reports an unlatch pressure higher than the maximum system rating.
Pressure Too Low	Pressure sensor report an unlatch pressure lower than the minimum system rating.
Ready-to-Lock 1	Ready-to-Lock Proximity Sensor Input.

Term	Definition
Ready-to-Lock 2	Ready-to-Lock Proximity Sensor Input.
Safe SW Missing	An input indicating the TSI Safety Switch is bypassed.
System Is Unsafe	Any APx_COMM_ERROR, APx_MISMATCH_ERROR, APx_SAFETY_ERROR, SSO_FAULT sets this bit.
Thermal 1 Input	This is a discrete sensor input from the Tool module.
Tool Input 2	This is a discrete sensor input from the Tool module.
Tool Latched	A proximity sensor input indicating that the coupling mechanism is in the Locked position.
Tool Power is ON	The “Tool Power is ON” bit is ON when the Arc Prevention Circuit has activated and is passing power to the Tool side. If this bit is low there is neither input/logic power nor output power available on the tool.
Tool Present	A hard connect input (sourced from the Tool) indicating the Master and Tool are electrically connected to each other.
Tool Stand Interlock (TSI)	The tool stand interlock feature that only allows Tool release while in the stand or storage location. The TSI circuit consists of a TSI switch and relays.
Tool Unlatched	A proximity sensor input indicating that the coupling mechanism is in the Unlocked position.
Tool-ID Error	Tool ID Communication Timeout. If the Tool-ID is not read after 200 ms the Tool-ID Error will be declared.
Tool-ID	Inputs from the Master node reporting the values from the Tool-ID switches on Tool module.
TSI Relay	A relay present in the ATI Master module that is driven by the closure of the TSI safety switch, therefore completing the TSI circuit and allowing the Tool Changer to be unlatched.
TSI Safety Switch	A non-contact RFID switch is installed on the EOAT and is used to indicate that the EOAT is in the stand or storage location.
TSI1 and TSI2	Inputs from a safety switch, which are high when the Tool Changer is in the stand.
TSI1 Relay and TSI2 Relay	Inputs from relays which should mirror the status of safety switch inputs SSO1 and SSO2.
Unlatch Valve Control 2	An Output that drives the SSO2 relay to activate the UNLATCH2 output.
Unlatch	The output supplied to the ATI Master module to uncouple the Tool Changer.
Unsafe Latch	An input indicating that an Latch command was received but not all conditions have been met, which could result in an unsafe Tool release and was therefore not processed.
Unsafe Unlatch	An input indicating that an Unlatch command was received but not all conditions have been met, which could result in an unsafe tool release and was therefore not processed.
Valve Error	Valve or pressure sensor defect. Logical OR of APx_VALVE_ERROR bits.
Valve Position	Valve Position signals if the spool on Valve 2 is in the LATCH (ON) or UNLATCH (OFF) position.
Valve Proximity Sensor	Shows status of the solenoid valve 2 position. When the valves are providing air to lock the Tool Changer the Valve Proximity Sensor bit is ON. When the valves are providing air to unlock the Tool Changer the Valve Proximity Sensor bit is OFF.

C. Control and Signal Modules

DKR—Ethernet/IP Control/Signal Module

1. Product Overview

The modules enable the customer to control and communicate with the Tool Changer through a network using an Ethernet/IP interface. The DKR module requires the use of a shielded and grounded EtherNet cable to the master module. The shield connection is passed through to the Tool side. The Tool side requires a shielded EtherNet cable and can be grounded on the Tool side if required.

An Ethernet/IP node is established on the Master module, but not on the Tool. Control of the Tool Changer is realized through the Master node along with the reporting of various Tool Changer I/O. The Tool module supports Tool-ID reported through the Master module and functions as a pass-through for the Ethernet/IP network and power to downstream equipment.

The Master module is used in combination with a valve adapter that contains dual double solenoid valves for Latch/Unlatch control of the Tool Changer. The user is required to provide a pneumatic supply source to the valve adapter. Refer to the appropriate valve adapter or Tool Changer manual for requirements.

In addition to supporting the standard Tool Changer input signals (Locked, Unlocked, etc.) the modules also support advanced diagnostic and fault reporting. Refer to *Figure 2.11*.

A minifast connector is provided on the Master and Tool modules for interfacing with power. Refer to *Section 8—Specifications* for voltage and current ratings. A M12 D-coded connector is provided on the Master and Tool modules for interfacing with Ethernet/IP. When the Tool Changer is coupled, the Master and Tool modules pass signals via spring loaded pin blocks. Flexible V-ring seals surround the pin blocks and are water resistant but not water proof. Refer to *Figure 1.1*.

To avoid unintentional Tool release, the power for the Unlatch valve is routed through a safety circuit. A safety switch must be connected to support this function. Refer to *Section 2.5—For Your Safety*.

1.1 DKR Master Module

The module has the following connectors:

- (1) integrated 4-pin valve signal pin block for the Latch and Unlatch signals to the solenoid valves
- (4) 3-pin female M8 RTL sensors (R1 and R2), Lock (L), and Unlock (U) sensor connectors
- (1) 3-pin female M8 valve adapter proximity sensor connector (S1)
- (1) 4-pin female M8 valve adapter pressure sensor connector (S2)
- (1) 4-pin female M12 D-coded EtherNet/IP connector
- (1) 4-pin male minifast power connector

The module also incorporates ATI's exclusive Arc Prevention Circuit which extends the life of electrical power contacts by eliminating arcing caused by inductive loads and high inrush current during coupling/uncoupling. Refer to *Section 2.3—Arc Prevention Circuit.*

The module provides status LED's to visually indicate its operation.

An electrical interface is provided on the module for support of (2) integrated double solenoid valves (DC Voltage, sourcing type). The integrated valve is supplied from ATI as part of a dual double solenoid valve adapter. Refer to the Valve Adapter Manual for more information (9620-20-C-Jxx Valve Adapters with Dual Double Solenoid, Valve Pass-through, Proximity and Pressure Sensors). Electrical interface drawings and connector details are provided in drawings in *Section 9—Drawings*.

Figure 1.1—DKR Modules

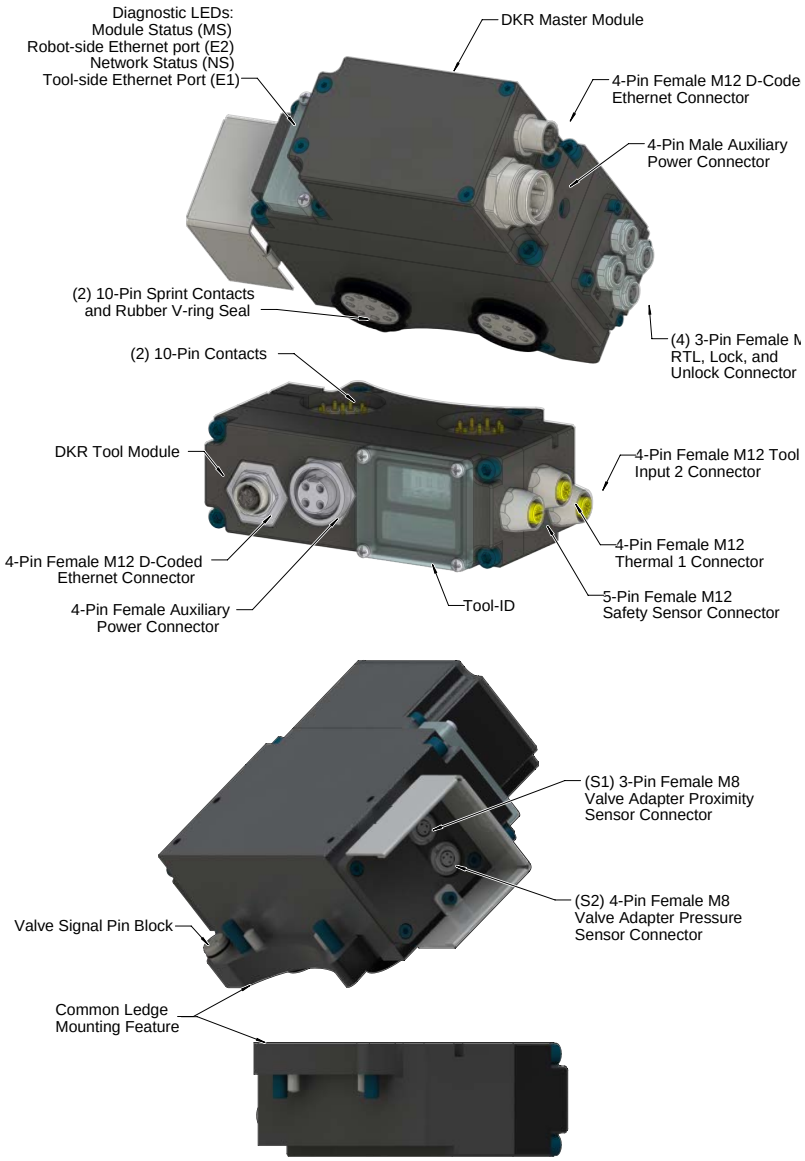

1.2 DKR Tool Module

The module has the following connectors:

- (1) 5-pin female M12 safety switch connector
- (1) 4-pin female M12 Thermal 1 connector
- (1) 4-pin female M12 Tool Input 2 connector
- (1) 4-pin female M12 D-coded EtherNet/IP connector
- (1) 4-pin male minifast power connector

The Tool module is equipped with a series of push button switches for setting of the Tool-ID inputs. This allows the customer to distinguish between the different Tools that are being used in a robotic cell or on a production line. See *Section 2.6—Software* for EtherNet/IP bitmap and detailed I/O information.

The module can support up to (4) PL e rated RFID based safety switches. Refer to *Section 2.5—For Your Safety* for compatible safety switches and *Section 9—Drawings* for more information.

The module requires a JR4-T tool adapter to align the Master and Tool modules, and mount to the Tool plate of the Tool Changer.

2. Product Information

The modules provide a 4-pin minifast connector for output supply power and input/logic power, for the power supply of its EtherNet/IP interface and sensor inputs. Refer to *Section 9—Drawings* for specific module wiring and connector interface information.

Prior to using the Tool Changer and the EtherNet/IP modules, various hardware settings must be configured. Communicating with the EtherNet/IP modules requires knowledge of EtherNet/IP standards and operation.

2.1 Master Module Information

The module operates as a web server on the EtherNet/IP network. It supports Class 3 Connected Explicit Messaging, UCMM Explicit Messaging, and Class 1 Connected Cyclic I/O Messaging. The Master node does not support any client functionality.

2.1.1 Class 1 Connection Information

Table 2.1 lists the Class 1 connection information for the module.

Table 2.1—Class 1 Connection Information

	Instance	Size in Bytes	32 bit "Run/idle" Header
Configuration	1	0	No
Input	101	16	Yes
Output	100	8	Yes

Note:

1. *For scanners that do not support Run/Idle Header in Target to Originator (T->O) data, the output IO size will be 12 bytes. The first 4 bytes are the header, which can be ignored.*

2.2 Integrated Web Server

A web browser, such as Internet Explorer or Mozilla Firefox, is required to access the web server. The module's web pages use simple HTML and do not require any plug ins. To access the 'Settings' page, a username and password are required; therefore a laptop that is connected to the ethernet connection on the DKR master module is required. Username and password are provided in *Section 2.2.2—Settings Page*.

The module's integrated web server hosts the following web pages:

To bring up the Home page of the web server, type "http://192.168.0.4" and then type the module's IP address into the browser's address field and then press enter**.**

2.2.1 Home Page

The Home page is the first screen that comes up. It reports the MAC address of the module.

Figure 2.1—DKR Integrated Web Server Home Page

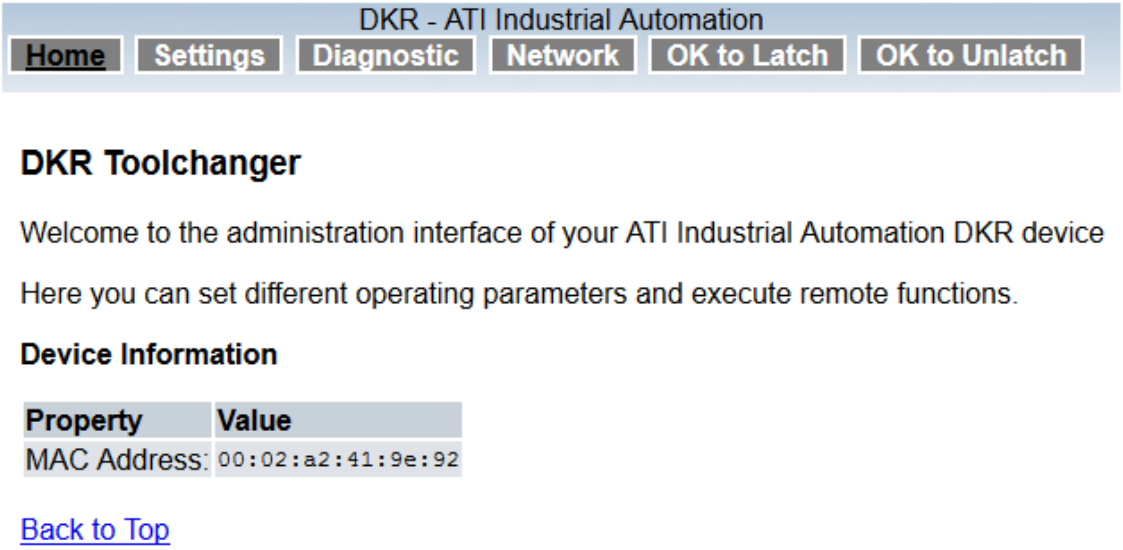

2.2.2 Settings Page

This page is used to change settings, IP address, subnet mask, gateway, or mode.

The first time the Settings tab is selected, a pop-up window appears that prompts for the user name and the password. The user name is **admin** and the password is **admin**.

Figure 2.2—Password Prompt

Figure 2.3—DKR Settings Page

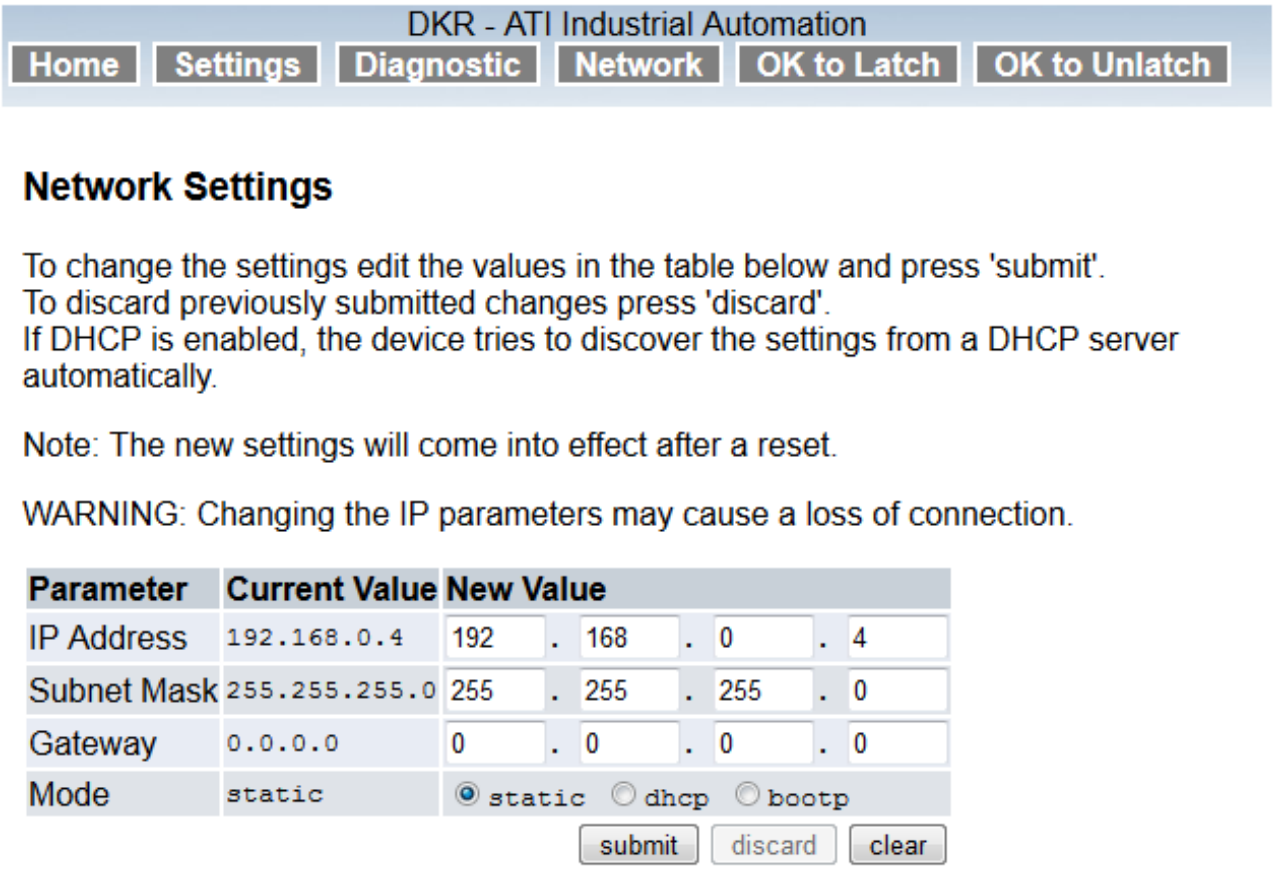

Note: Settings web page can only be accessed through a laptop.

The Master module network settings are only loaded upon power up, consequently the module must be power cycled for new setting changes to be used. The default settings are as follows:

- IP Address is set to **192.168.0.4.**
- The Subnet Mask is set to: **255.255.255.0.**
- The Gateway is set to: **0.0.0.0**.
- Mode is set to: **Static**.

There are (4) ways to configure the modules network settings:

1. *Section 2.2.2.1—Configure the Master Module Network Settings to the Defaults Values*
2. *Section 2.2.2.2—Configure the Master Module Network Settings Using the Values Entered into the Setting Page*
3. *Section 2.2.2.3—Configure the Master Module Network Settings Using Values Entered into the Setting Page and the last Octet of the IP address from the DIP Switches*
4. *Section 2.2.2.4—Configure the Module Network Settings Using a DHCP Server*

2.2.2.1 Configure the Master Module Network Settings to the Defaults Values

To configure the network settings to the module defaults manually, set DIP switch 9 to **ON** and power cycle the DKR master module. Refer to *Section 2.2.7—DIP Switches on the Master Module*.

This disregards the IP address manually set from the module DIP switches 1-8 and any values entered into the Settings page. The network settings are set to the module defaults after a power cycle. If values other than the default values were entered into the Settings page, the values will be restored to the default network values.

If the IP address was changed, the connection to the Integrated Web Server will be lost after the power cycle. To reconnect to the Home page, type http://192.168.0.4 into the browser's address field and then press enter**.**

Figure 2.4—Using DIP Switch 9 to Configure the Module to the Default Settings

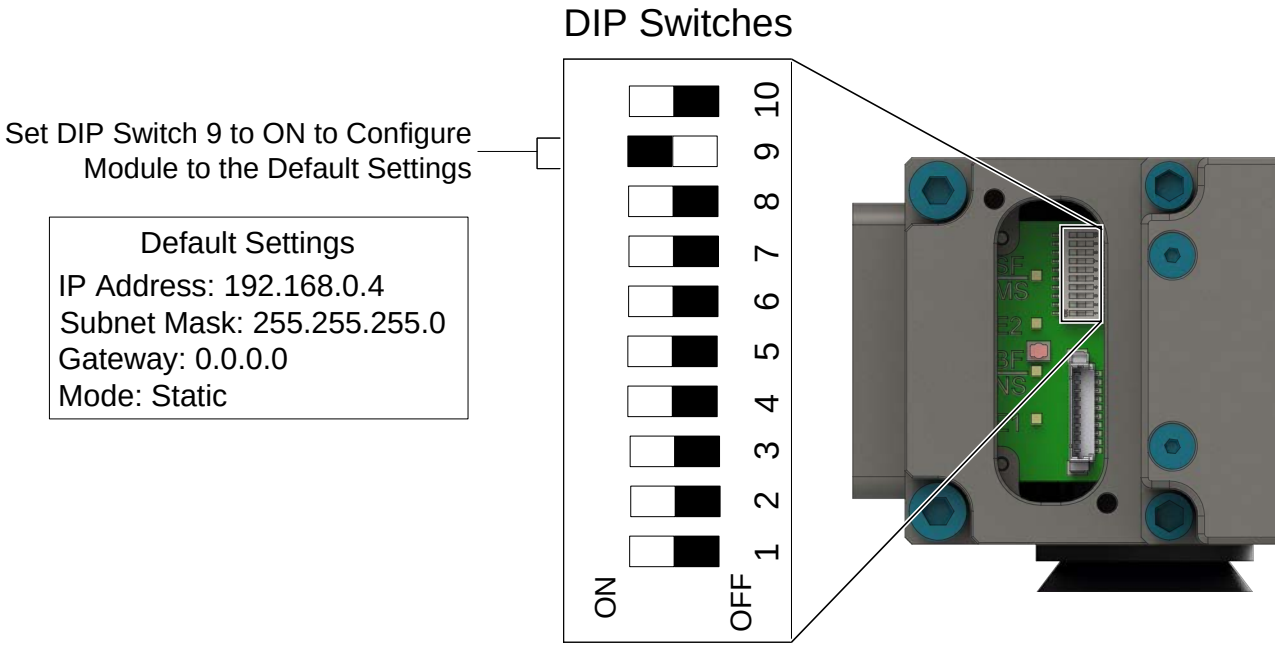

2.2.2.2 Configure the Master Module Network Settings Using the Values Entered into the Setting Page

To configure the network settings using the values entered from the Setting page, manually set DIP switches 1 through 9 to **OFF**. Refer to *Section 2.2.7—DIP Switches on the Master Module*. This disregards the all the defaults values stored by the module. The network settings will use the values entered into the Settings page.

Figure 2.5—Using the Values entered into the Settings Page to Configure the Module

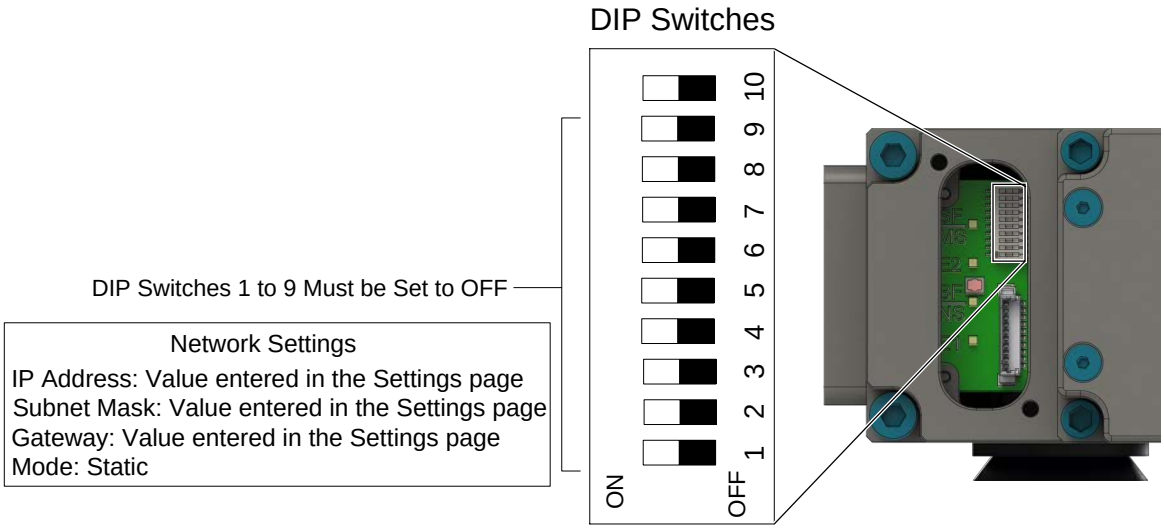

Connect to the Integrated Web Server on the DKR Master Module using a laptop and open the Settings page. Refer to *Section 2.2—Integrated Web Server.*

1. Enter the following values in the Settings page:
   a. In the IP Address fields enter the desired values, example: **195.168.1.8**.
   b. In the Subnet Mask field enter the desired values, example: **255.255.255.128**
   c. In the Default Gateway field enter the desired values, example: **192.168.1.1**
   d. The Mode field must be set to **static,** click on the **static** radio button.
2. Click **Submit** at the bottom of the Setting page.
3. Power cycle the Master module.

Figure 2.6—Settings Page (Examples Shown for Reference)

Parameter	Current Value	New Value
IP Address	192.168.0.4	192 . 168 . 1 . 8
Subnet Mask	255.255.255.0	255 . 255 . 255 . 128
Gateway	0.0.0.0	192 . 168 . 1 . 1
Mode	static	◉ static ○ dhcp ○ bootp

submit discard clear

If the IP address was changed, the connection to the Integrated Web Server will be lost after the power cycle. To reconnect to the Home page, type http://IP address value entered. Example: enter http://192.168.1.8 into the browser's address field and then press enter**.**

2.2.2.3 Configure the Master Module Network Settings Using Values Entered into the Setting Page and the last Octet of the IP address from the DIP Switches

To configure the network settings using the values entered in the setting page for the Subnet mask, Gateway, Mode and the first 3 octets of the IP Address. The value for the last octet will use the value set by the DIP switches. Manually set DIP 1 through 8 to the desired values and set switch 9 to **OFF**. Refer to *Section 2.2.7—DIP Switches on the Master Module*.

> **NOTICE:** If the DIP switches evaluate to an octet of 0 (DIP switches 1–8 all off) or 255 (DIP switches 1–8 all on), the last octet is set to 1, in order to avoid using an illegal network address.

Figure 2.7—Using the Values Entered into the Settings Page for the Module Network Settings

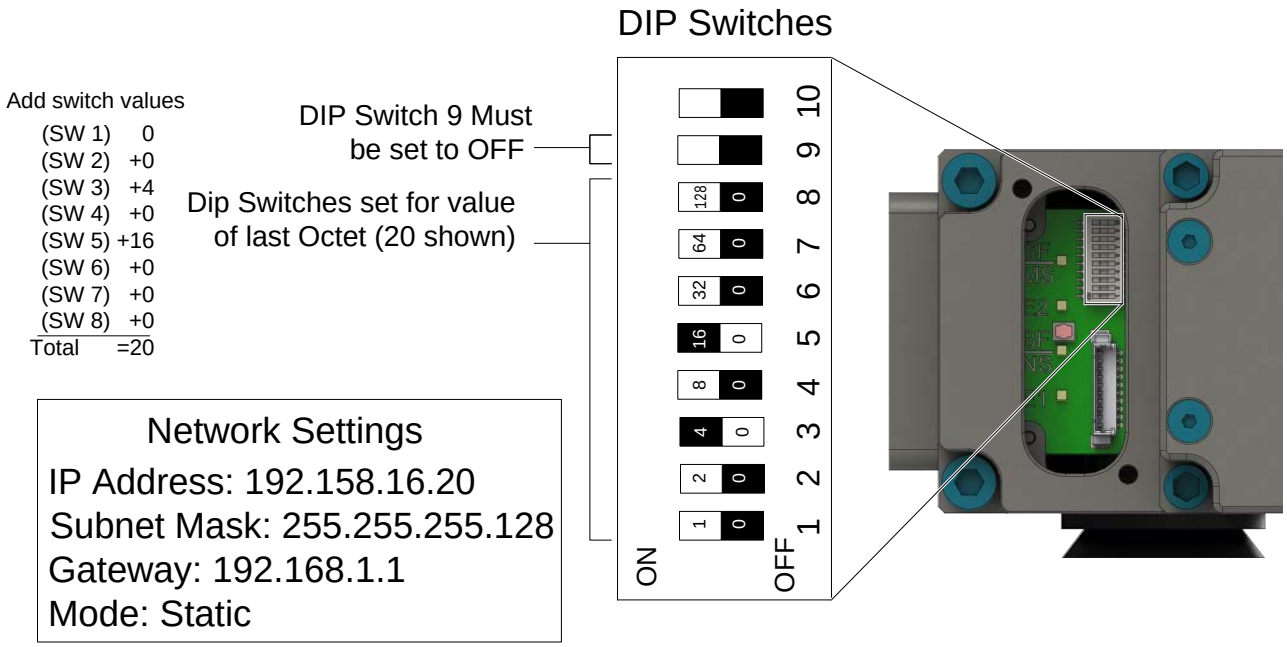

Connect to the Integrated Web Server on the DKR Master Module using a laptop and open the Settings page. Refer to *Section 2.2—Integrated Web Server.*

1. Enter the following values in the Settings page:
   a. In the IP Address fields enter the desired values for the first three Octets, example: **195.158.16.20**
   b. In the Subnet Mask field enter the desired values, example: **255.255.255.128**
   c. In the Default Gateway field enter the desired values, example: **192.168.1.1**
   d. The Mode field must be set to **static,** click on the **static** radio button.
2. Click **Submit** at the bottom of the Setting page.
3. Power cycle the Master module.

Figure 2.8—Settings Page (Examples Shown for Reference)

Parameter	Current Value	New Value
IP Address	192.168.0.4	195 . 158 . 16 . 20
Subnet Mask	255.255.255.0	255 . 255 . 255 . 128
Gateway	0.0.0.0	192 . 168 . 1 . 1
Mode	static	◉ static ○ dhcp ○ bootp

submit discard clear

If the IP address was changed, after the power cycle the connection to the Integrated Web Server will be lost. To reconnect to the Home page, type http://IP address value entered. Example: enter http://195.158.16.20 into the browser's address field and then press enter**.**

2.2.2.4 Configure the Module Network Settings Using a DHCP Server

To configure the module to use values for the IP Address, Subnet Mask, and Default Gateway from the DHCP server, manually set DIP switch 9 to **OFF**. Refer to *Section 2.2.7—DIP Switches on the Master Module*.

Figure 2.9—Using a DHCP Server to Configure the Module Network Settings

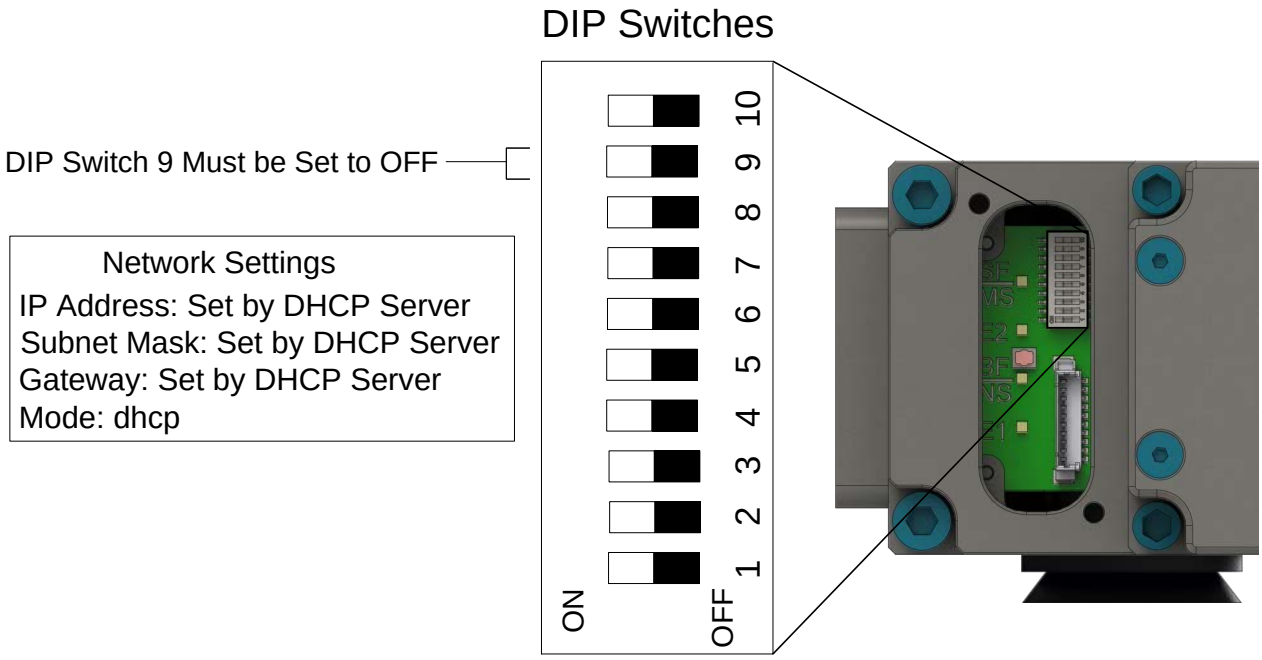

Connect to the Integrated Web Server on the DKR Module using a laptop and open the Settings page. Refer to *Section 2.2—Integrated Web Server.*

1. Enter the following values in the Settings page:
   a. IP Address: **Set by DHCP server.**
   b. The Subnet Mask: **Set by DHCP server.**
   c. The Gateway: **Set by DHCP server**.
   d. Mode is set to: **dhcp,** click the **dhcp** radio button.
2. Click the **Submit** button on the setting page.
3. Power cycle the module.

Figure 2.10—Settings Page

Parameter	Current Value	New Value
IP Address	192.168.0.4	. . .
Subnet Mask	255.255.255.0	. . .
Gateway	0.0.0.0	. . .
Mode	static	○ static ◉ dhcp ○ bootp

submit discard clear

A DHCP server must be present in the network. If no DHCP server is responding within 30 seconds after power-up, the Master module uses the network setting entered on the communication setting setup page.

2.2.3 Diagnostics Page

The Diagnostics page contains Device Information, Ethernet/IP Status, and Network Output and Input Bitmap Data, refer to *Figure 2.11*. The page displays device information such as Tool-ID, pressure reading and AP1, AP2 firmware versions. Web page must be refreshed to reflect current status. When errors are reported, they are displayed in red just below the ATI banner. Refer to *Figure 2.12*.

Under the "Device Ethernet/IP State" header, status indicator for the "I/O Connection Established", "Ready for I/O Connection", and "Communication Error" are displayed. Refer to *Table 2.2* for the meaning of the indicators.

Table 2.2—Device Ethernet/IP State LED's				
Status Indicator	**Color**		**State**	**Meaning**
I/O Connection Established		Green	In Communication state	Shows whether the device is connected to and communicating on the Ethernet/IP network
		Off	Not in Communication state	
Ready for I/O Connection		Green	Device ready	Shows whether the device has been started correctly and can accept a new configuration.
		Off	Device not ready	
Communication Error		Red	Error	Shows whether an error occurred while trying to communicate with the device
		Off	No error	

Under the "Network" header, the status of Output and Input bitmap data is displayed.

Figure 2.11—DKR Diagnostics Page

DKR - ATI Industrial Automation

Home | Settings | Diagnostic | Network | OK to Latch | OK to Unlatch

Device Info

Tool ID: Not Available
Pressure Reading: 83.5 psi / 5.8 bar
Note: When Unlocked, pressure should be between 60 – 100 PSI. When Locked, pressure should be near 0 PSI
AP1 Firmware Version: 2.6
AP2 Firmware Version: 2.6

Device Ethernet/IP State

- I/O Connection Established
- Ready for I/O Connection
- Communication Error

Network

Output Bitmap Data

Note: A blank Status field indicates that the associated bit is OFF

Name	Status
Byte 0	
Unlatch	
Latch	
Clear Errors	
Reserved	
Reserved	
Reserved	
Reserved	
Reserved	

Input Bitmap Data

Note: A blank Status field indicates that the associated bit is OFF

Name	Status
Bytes 0-1	
Tool Latched	
Tool Unlatched	ON
OK to Latch	ON
OK to Unlatch	
Tool Present	
Safe SW Missing	
Ready-to-Lock 1	
Ready-to-Lock 2	
Tool Number 1	ON
Tool Number 2	ON
Tool Number 4	ON
Tool Number 8	ON
Tool Number 16	ON
Tool Number 32	ON
Tool Number 64	ON
Tool Number 128	ON
Bytes 2-3	
Redundant Tool Number 1	ON
Redundant Tool Number 2	ON
Redundant Tool Number 4	ON
Redundant Tool Number 8	ON
Redundant Tool Number 16	ON
Redundant Tool Number 32	ON
Redundant Tool Number 64	ON
Redundant Tool Number 128	ON
Tool Power Is ON	
Output Power Available	ON
Valve Error	
Pressure Too High	
Pressure Too Low	
Pressure Sensor Disconnected	
Valve Proximity Sensor	
Thermal 1 Input	
Bytes 4-5	
Everything is OK	ON
TSI1	
TSI2	
TSI1 Relay	
TSI2 Relay	
Tool ID Error	
Input Power Available	ON
Tool Input 2	
Line Number 1	ON
Line Number 2	ON
Line Number 4	ON
Line Number 8	ON
System is Unsafe	
Unsafe Latch	
Unsafe Unlatch	
Error on Latch	
Bytes 6-7	
AP1-AP2 Comm Error	
AP1 Valve Error	
AP1 Output Mismatch	
AP1 Input Mismatch	
AP2 Memory Failure	
Firmware Version Mismatch	
Pressure Reading Bit 0	ON
Pressure Reading Bit 1	
Pressure Reading Bit 2	
Pressure Reading Bit 3	
Pressure Reading Bit 4	ON
Pressure Reading Bit 5	ON
Pressure Reading Bit 6	ON
Pressure Reading Bit 7	ON
Pressure Reading Bit 8	ON
Pressure Reading Bit 9	ON
Bytes 8-9	
AP1 Minor Revision Bit0	
AP1 Minor Revision Bit1	ON
AP1 Minor Revision Bit2	ON
AP1 Minor Revision Bit3	
AP1 Major Revision Bit0	
AP1 Major Revision Bit1	ON
AP1 Major Revision Bit2	
AP1 Major Revision Bit3	
AP2 Mismatch Error	
AP2-AP1 Comm Error	
AP2 Memory Failure	
AP2 Valve Error	
AP2 Error on Unlatch 2	
AP2 Pressure Sensor Disconnected	
AP2 Memory Tests Complete	ON
AP2 Safe to Unlatch	
Bytes 10-11	
AP2 TSI2	
AP2 TSI1Relay	
AP2 TSI2Relay	
Reserved	
AP2 Unlatch Valve Control 2	
AP2 Valve Position	
AP2 Version Error	
AP2 Safety Error	
AP2 Minor FW Revision Bit0	
AP2 Minor FW Revision Bit1	ON
AP2 Minor FW Revision Bit2	ON
AP2 Minor FW Revision Bit3	
AP2 Major FW Revision Bit0	
AP2 Major FW Revision Bit1	ON
AP2 Major FW Revision Bit2	
AP2 Major FW Revision Bit3	
Byte 12	
AP1 Memory Tests Complete	ON
Raw Locked Sensor	
Raw Unlocked Sensor	ON
Lock/Unlock Sensor Fault	
Error on Unlatch1	
Error on Unlatch2	
Reserved	
Cross Monitoring Error	

Back to Top

Note: Web page must be refreshed to reflect current status.

Figure 2.12—DKR Diagnostics Page (Misc. Errors Displayed)

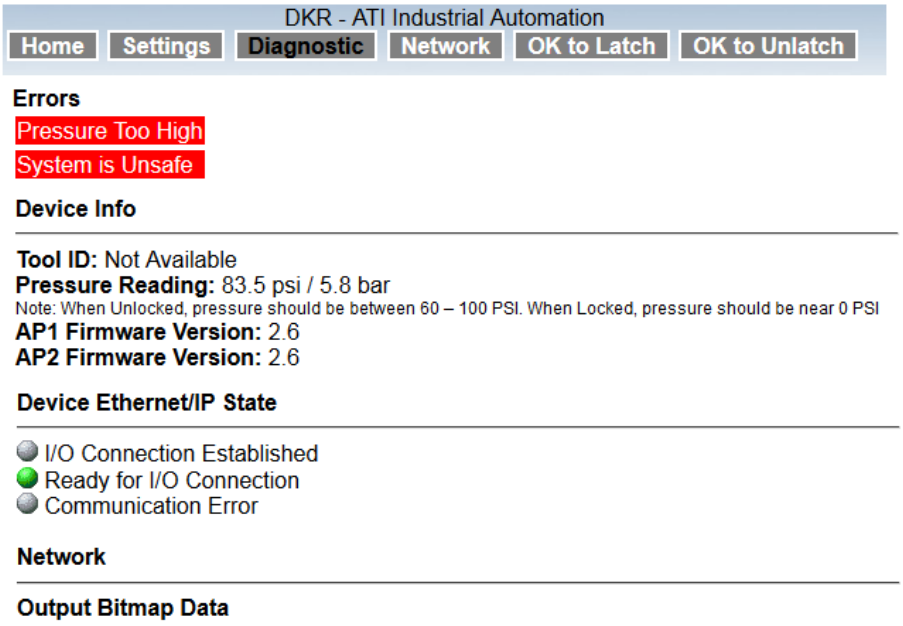

2.2.4 Network

This page contains Network Switch Configurations (Robot and Tool side ports) and Network Counters. Refer to *Figure 2.13*.

The DKR module has an integrated Ethernet switch. The DKR module is shipped with the following switch settings:

2.2.4.1 Robot Side Port:

Robot Side Port default settings:

- Auto-Negotiation: **Enabled**
- Speed: **100 MBit/s**
- Duplex Setting: **Full Duplex**
- Auto-MDIX: **Enabled**
- MDI Setting: **MDI**

2.2.4.2 Tool Side Port:

Tool Side Port default settings:

- Auto-Negotiation: **Disabled**
- Speed: **100 MBit/s**
- Duplex Setting: **Full Duplex**
- Auto-MDIX: **Disabled**
- MDI Setting: **MDI-X**

The Network page also displays Interface counters and Media counters under the Network Counters heading. These show information such as Bytes received and sent, different types of errors encountered

Figure 2.13—Network Page

DKR - ATI Industrial Automation

Home | Settings | Diagnostic | Network | OK to Latch | OK to Unlatch

Network Switch Configuration

Robot Side Port

Property	Value
Auto-Negotiation	Yes
Duplex Operation	-
Port Speed	-
MDI Setting	Auto MDI-X

Tool Side Port

Property	Value
Auto-Negotiation	No
Duplex Operation	Full
Port Speed	100 MBit/s
MDI Setting	MDI-X

Network Counters

Interface Counters

Property	Value
Bytes Received	90585
Unicast Packets Received	322
Non-unicast Packets Received	0
Inbound Packets Discarded	0
Inbound Packet Errors	0
Inbound Unknown Protocol	53
Bytes Sent	273437
Unicast Packets Sent	608
Non-unicast Packets Sent	0
Outbound Packets Discarded	0
Outbound Packet Errors	0

Media Counters

Property	Value
Alignment Errors	0
FCS Errors	0
Single Collisions	0
Multiple Collisions	0
SQE Test Errors	0
Deferred Transmissions	0
Late Collisions	0
Excessive Collisions	0
MAC Transmit Errors	0
Carrier Sense Errors	0
Frame Too Long	0
MAC Receive Errors	0

Back to Top

Note: Web page must be refreshed to reflect current status.

2.2.5 OK to Latch

This page contains status of preconditions and the required status of the conditions for the OK to Latch bit to be ON. If the status required for Input or Output bit is ON then the status should be ON. If the status required for the Input or Output bit is OFF then status should be blank indicating the status is OFF. Green signifies condition has met requirement and red signifies condition has not met requirement (Refer to *Figure 2.14* and *Figure 2.15*)

Figure 2.14—OK to Latch Page

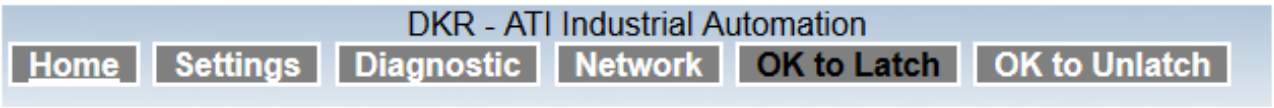

OK to Latch Status: ON

Note: A green Status field indicates that the bit status matches the Status Required field

Condition	Status Required	Status
System is Unsafe	OFF	OFF
Input Power Available	ON	ON
Output Power Available	ON	ON
Pressure Too High	OFF	OFF
Pressure Too Low	OFF	OFF
Tool Latched	OFF	OFF
Unlatch	OFF	OFF
Latch	OFF	OFF
AP2 Safety Error	OFF	OFF

Back to Top

Figure 2.15—OK to Latch Page (Errors Displayed)

DKR - ATI Industrial Automation

Home | Settings | Diagnostic | Network | OK to Latch | OK to Unlatch

OK to Latch Status: OFF

Note: A green Status field indicates that the bit status matches the Status Required field

Condition	Status Required	Status
System is Unsafe	OFF	ON
Input Power Available	ON	ON
Output Power Available	ON	ON
Pressure Too High	OFF	ON
Pressure Too Low	OFF	OFF
Tool Latched	OFF	OFF
Unlatch	OFF	OFF
Latch	OFF	OFF
AP2 Safety Error	OFF	ON

Back to Top

2.2.6 OK to Unlatch

This page contains status of preconditions and the required status of the conditions for the OK to Unlatch bit to be ON. If the status required for Input or Output bit is ON then the status should be ON. If the status required for the Input or Output bit is OFF then status should be blank indicating the status is OFF. Green signifies condition has met requirement and red signifies condition has not met requirement (Refer to *Figure 2.16* and *Figure 2.17*)

Figure 2.16—OK to Unlatch Page

DKR - ATI Industrial Automation

Home | Settings | Diagnostic | Network | OK to Latch | OK to Unlatch

OK to Unlatch Status: ON

Note: A green Status field indicates that the bit status matches the Status Required field

Condition	Status Required	Status
AP1 Memory_Tests_Complete	ON	ON
AP2 Memory_Tests_Complete	ON	ON
TSI1	ON	ON
TSI2	ON	ON
TSI1 Relay	ON	ON
TSI2 Relay	ON	ON
AP2 V1Relay	ON	ON
AP2 V2Relay	ON	ON
Tool Unlatched	OFF	OFF
AP2 Unlatch Valve Control 2	OFF	OFF
AP2 Safety Error	OFF	OFF
Unlatch	OFF	OFF
Latch	OFF	OFF
Input Power Available	ON	ON
Output Power Available	ON	ON
Pressure Too High	OFF	OFF
Pressure Too Low	OFF	OFF
System is Unsafe	OFF	OFF

Back to Top

Figure 2.17—OK to Unlatch Page (Errors Displayed)

DKR - ATI Industrial Automation

Home | Settings | Diagnostic | Network | OK to Latch | OK to Unlatch

OK to Unlatch Status: OFF

Note: A green Status field indicates that the bit status matches the Status Required field

Condition	Status Required	Status
AP1 Memory_Tests_Complete	ON	ON
AP2 Memory_Tests_Complete	ON	ON
TSI1	ON	OFF
TSI2	ON	OFF
TSI1 Relay	ON	OFF
TSI2 Relay	ON	OFF
AP2 V1Relay	ON	OFF
AP2 V2Relay	ON	OFF
Tool Unlatched	OFF	OFF
AP2 Unlatch Valve Control 2	OFF	OFF
AP2 Safety Error	OFF	ON
Unlatch	OFF	OFF
Latch	OFF	OFF
Input Power Available	ON	ON
Output Power Available	ON	ON
Pressure Too High	OFF	ON
Pressure Too Low	OFF	OFF
System is Unsafe	OFF	ON

Back to Top

2.2.7 DIP Switches on the Master Module

Refer to *Figure 2.18* for location of DIP switches on Master Module.

The Master module has 10 DIP switches with the following functions:

DIP 1 through 8:	Last octet of the DKR's IP address
DIP 9:	Sets Master module IP address settings to the default values
DIP 10:	Must always be in the OFF position

Figure 2.18—LED Display of Properly Functioning Coupled Modules

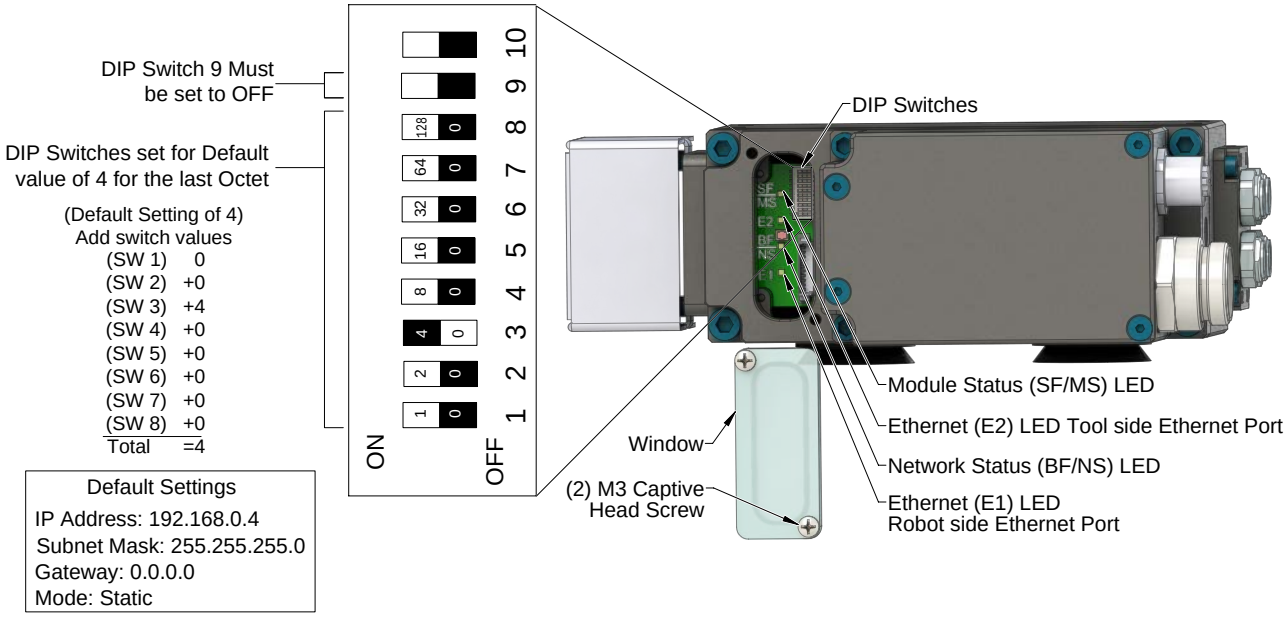

2.2.8 Module and Network Status LED

When the modules are coupled and functioning properly with customer tooling attached, the Master module LEDs should display as shown in *Figure 2.19* with the E1 and the E2 LEDs flashing based on the EIP communication. Refer to *Table 2.3*, *Table 2.4*,and *Table 2.5* for status of LED's.

Figure 2.19—LED Display of Properly Functioning Coupled Modules

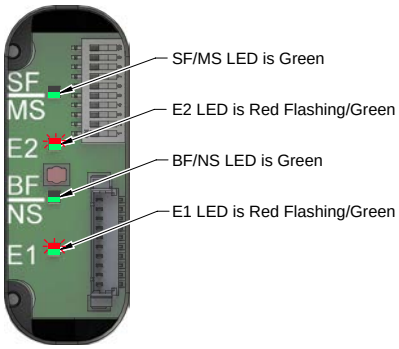

Module Status (SF/MS) status LED provides device status for power and proper operation. Refer to *Table 2.3*. Network Status (BF/NS) status LED provides Ethernet/IP status information. Refer to *Table 2.4*.

Table 2.3—Module Status (SF/MS) LED

Status	LED Function		Note
No Power		Off	No power applied. Check voltage is out of specification, refer to *Section 8—Specifications*.
Operational		Green (solid)	Normal operation
Fault		Red (solid)	One of the following faults has occurred: - Internal Diagnostic Error
		Red (flashing)	Reset To Default Push Button was pressed or one of the following faults has occurred: - Communication error with Tool module - Input power failure
System Startup Self Testing		Red (flashing)/ Green (solid)[1]	System Startup Self Testing

Note:
1. During system startup, the LED will be green for 250 ms, then red for 250 ms, then finally stays green until the module encounters a fault.

Table 2.4—Network Status (BF/NS) LED

Status	LED Function		Note
Off Line		Off	No IP address or powered off
Operational		Green (solid)	Established connection
Not OK		Red (solid)	IP address conflict
		Red (flashing)	Connection timed out or no connection to the Ethernet
System Startup Self Testing		Red (flash) then Green (flashing)	System Startup Self Testing

The Ethernet LEDs provide information about link status and activity on the ports of the integrated Ethernet switch. The Ethernet 1 (E1) LED displays the status of the robot side Ethernet port. The Ethernet 2 (E2) LED displays the status of the tool side Ethernet port.

Table 2.5—Master Module Ethernet 1 (E1) LED

Status	LED Function		Note
No Link		Off	The Master module has no connection to the Ethernet.
Link		Green (solid)	The Master module is connected to the Ethernet but there is currently no data exchange activity.
Active RX/TX		Red (flashing) / Green (solid)	Data exchange activity with the Ethernet

Table 2.6—Master Module Ethernet 2 (E2) LED

Status	LED Function		Note
No Link		Off	The Tool module has no connection to the customer tooling.
Link		Green (solid)	The Tool module is connected to the Ethernet but there is currently no data exchange activity.
Active RX/TX		Red (flashing) / Green (solid)	Data exchange activity with the Ethernet (When the modules are coupled and functioning properly with customer tooling attached)

2.2.9 Using Ethernet/IP Quick Connect

Using Ethernet/IP Quick Connect requires that the Tool Changer reports to the PLC when making electrical contact between Master and Tool before the PLC can start communicating to any downstream nodes.

The “Tool Power is ON” signal for Ethernet/IP Quick Connect indicates to the controller that all electrical connections to the Tool side devices are made and power is applied. This signal comes from the Tool Changer. The DKR module reports “Tool Power is ON” in the bitmap.

In *Figure 2.20* actions shown in red are the typical application actions but may vary and are outside the scope of the manual. Refer to section E-3 of the ODVA Ethernet/IP specification (Edition 1.14) for specific requirements and actions of the controller.

Figure 2.20—Quick Connect Sequence Diagram

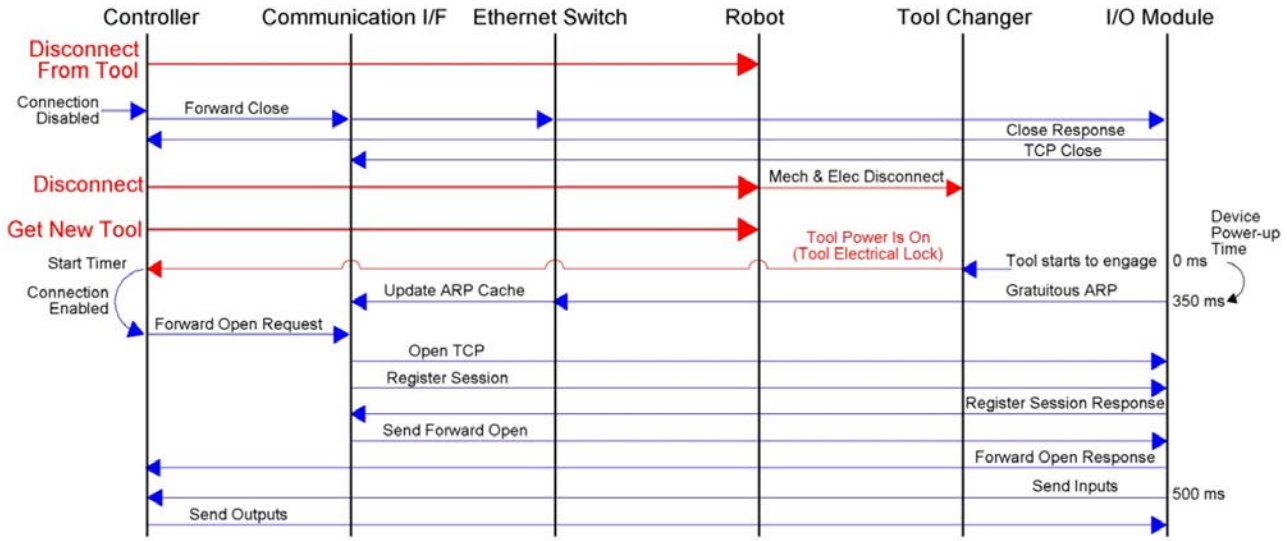

2.3 Arc Prevention Circuit

The Master module incorporates ATI's exclusive Arc Prevention Circuit. The Arc Prevention Circuit extends the life of electrical power contacts by eliminating arcing caused by inductive loads and high inrush current to the Tool module during coupling/uncoupling. The Arc Prevention Circuit makes it possible to couple/uncouple without switching power off and prevents damage to the contacts.

In the Master module, the Arc Prevention Circuit controls the INPUT and OUTPUT power to the Tool module.

2.3.1 Arc Prevention Circuit Behavior during Coupling

The behavior of the Arc Prevention circuit during coupling can be more clearly understood by referring to *Figure 2.21*, which shows the power-on timing diagram for the Arc Prevention Circuit. Starting at the top of the diagram, electrical contact between Master and Tool pin contacts occurs. The LATCH command is issued initiating locking of the Master and Tool.

Electrical contact must be made and required input(s) turned on for the LATCH command to be issued. Refer to *Section 4.4—Recommended Sequence of Operation* for specific inputs. Immediately after the LATCH command is issued, the Arc Prevention Circuit turns on Input and Output power to the Tool module. The power-off time delay between the LATCH command and the switching on of power (designated T_1 in the diagram) is less than 20 ms.

Figure 2.21—Power-On Timing

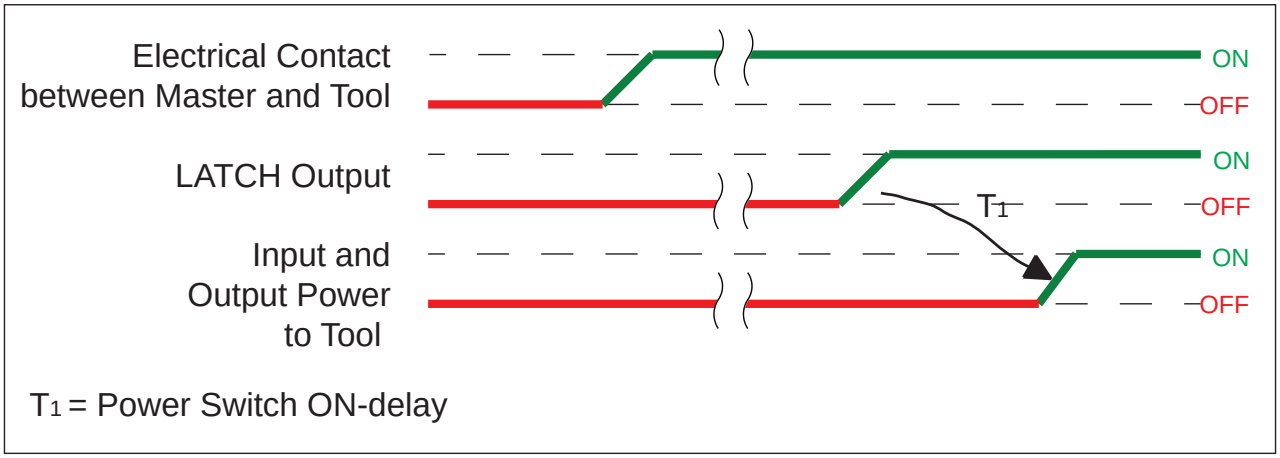

2.3.2 Arc Prevention Circuit Behavior during Uncoupling

The behavior of the Arc Prevention Circuit during uncoupling can be more clearly understood by referring to *Figure 2.22*, which shows the power-off timing diagram for the Arc Prevention Circuit. Starting at the top of the diagram, the UNLATCH command is issued thus initiating uncoupling of the Master and Tool.

Immediately after the UNLATCH command is issued, the Arc Prevention Circuit turns off Tooling power. The power-off time delay between the UNLATCH command and the switching off of power (designated T_2 in the diagram) is less than 100 ms.

Shortly after power is turned off and the Master and Tool begin to separate, electrical contact between Master and Tool pin contacts is lost. This occurs with a delay, designated T_3 in the diagram, after the UNLATCH command is issued. The magnitude of time T_3 is a function of many factors, including the weight of the EOAT, the friction between Master and Tool alignment pins, etc. but is usually no shorter than 300 ms.

Figure 2.22—Power-Off Timing

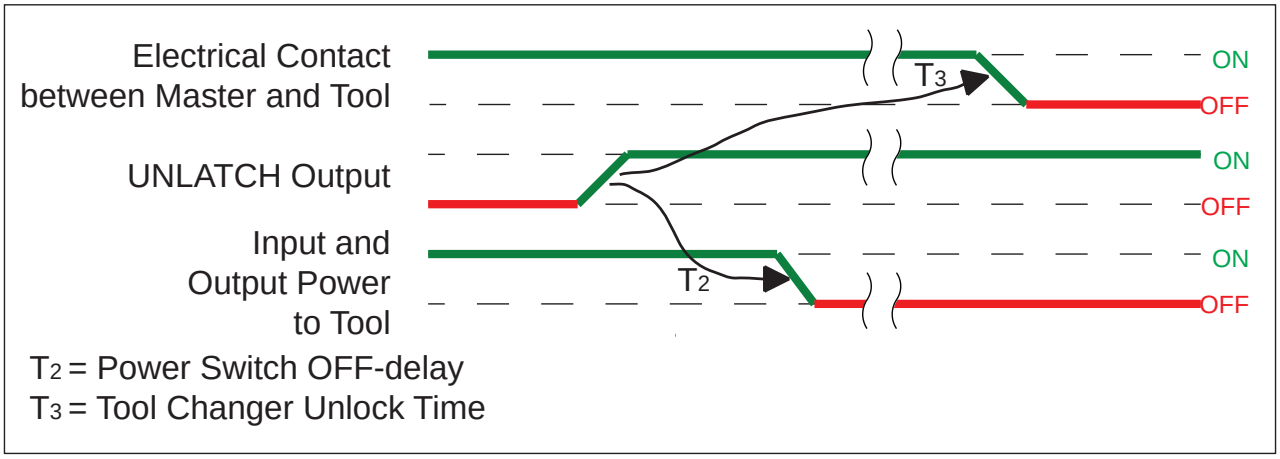

2.4 Tool Module

In addition to providing Tool-ID and Tool side TSI, the Tool module also functions as a pass-through for Ethernet/IP and auxiliary power signals to downstream equipment. For more details refer to *Section 9—Drawings.*

2.4.1 Tool-ID

Typically the Tool-ID information is available to the Master within 250 ms from the time the changer is coupled. Tool-ID is updated every 100 ms when Master and Tool are coupled.

There are (5) pushbutton switches provided on the Tool module. The DKR Tool module has redundant Tool-ID and uses SW1 (1's digit) and SW2 (10's digit) to set the Tool-ID up to a value of 99. The redundant Tool-ID uses SW3 (1's digit) and SW4 (10's digit) to set the redundant Tool-ID up to a value of 99. SW5 is a separate Tool-ID number. Refer to *Section 3.7—Setting the Tool-ID* for detailed instructions.

Tool-ID SW1 and SW2 are reported in the I/O bitmap input (Byte 1 - Bit 0 through 7). Redundant Tool-ID SW3 and SW4 are reported in the I/O bitmap input (Byte 2 - Bit 0 through 7). Tool-ID SW5 is reported in the I/O bitmap input (Byte 5 - Bit 0 through 3)

If a tool is not present, then all relevant Tool-ID bits will be ON. Tool-ID SW1 and SW2 will be reported as 255. Redundant Tool-ID SW3 and SW4 will be reported as 255. Tool-ID SW5 will be reported as 15. Refer to *Section 3.7—Setting the Tool-ID.*

NOTICE: If the plastic window and seal above the Tool-ID switches are removed, ensure the seal and window are re-positioned correctly to prevent a leakage path inside the module.

Figure 2.23—Tool-ID Switch, Dip Switches, Thermal 1, and Tool Input 2 Connectors

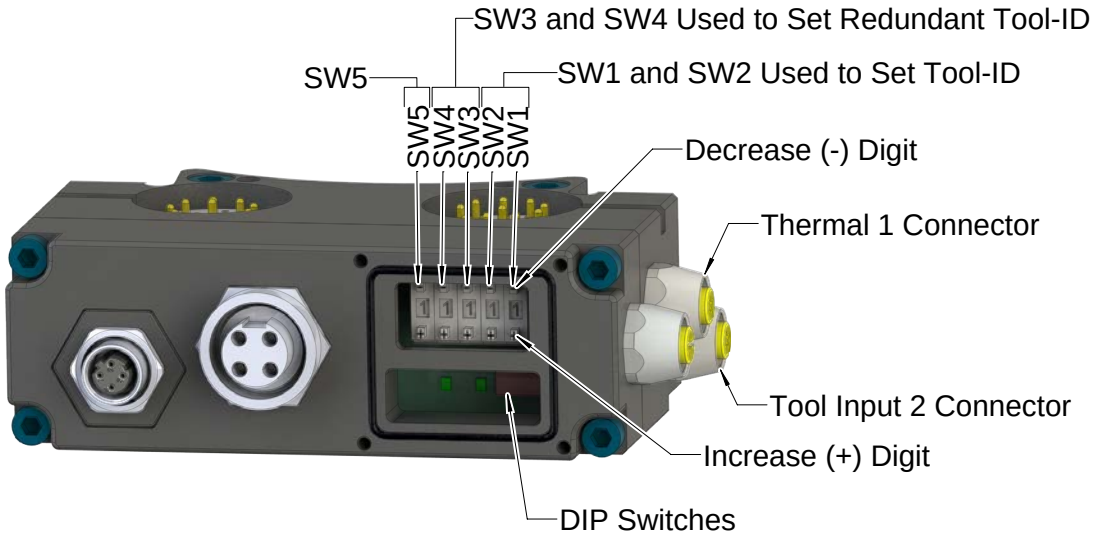

2.4.2 Tool Module DIP Switches

The Tool module has 10 DIP switches which should not be changed:

DIP switches 1-10: Must always be in the OFF position

2.4.3 Thermal 1 and Tool Input 2 Connectors

The Thermal 1 and Tool input 2 connectors are intended to interface with PNP 3-wire proximity sensors, dry-contact switches, and various 2-wire sensors of which Omron E2EQ-X7D1-M1GJ, Azbil/Yamatake FL7S-5W6W-CN03B, PEPPERL-FUCHS NMB2-18GM55-Z3-C-FE-300 mm-V2, and IFM IGS209, are examples that have been tested.

2.5 For Your Safety

For your safety and the safety of machine operators read this chapter carefully and the safety related documentation contained in the Dual Double Solenoid Valve Adapter Manual (9620-20-C-Jxx Valve Adapters Dual Dou Sol Pas Th Prox Pres Sw). Only then should you start working with the DKR module or with the machine protected by the DKR Module - in conjunction with other safety devices.

2.5.1 Safety System Description

The DKR-M module, in conjunction with a dual double solenoid valve adapter, is designed with special features to achieve a SIL2/PLd safety reliability level in accordance with ISO standards 61508/13849-1. The safety system is designed to avoid unintentional Tool release, integrating the non-contact safety switch, two pneumatically interconnected solenoid valves, dual relays, and two cross monitoring processors into the safety circuit.

Based on the status of all safety-related inputs and outputs, the (2) cross monitoring processors in the Master module determine when conditions are safe to execute an Unlatch command. The processors are linked by hardwired I/O. If one processor detects a condition that differs from the other processor, its control logic declares a fault preventing the Unlatch output. When the Tool is positioned safely in the tool stand or storage location, the safety switch outputs close the TSI1 and TSI2 Relays that allows the Unlatch command to pass from the Application Processors to the solenoid valves.

A second set of contacts on the TSI1 and TSI2 Relays also provide diagnostics to the Application Processors. The valve adapter is equipped with (2) double solenoid valves. Valve adapter pressure and proximity sensor outputs are evaluated by the Application Processors for diagnostic purposes.

Figure 2.24—Safety Circuit Diagram

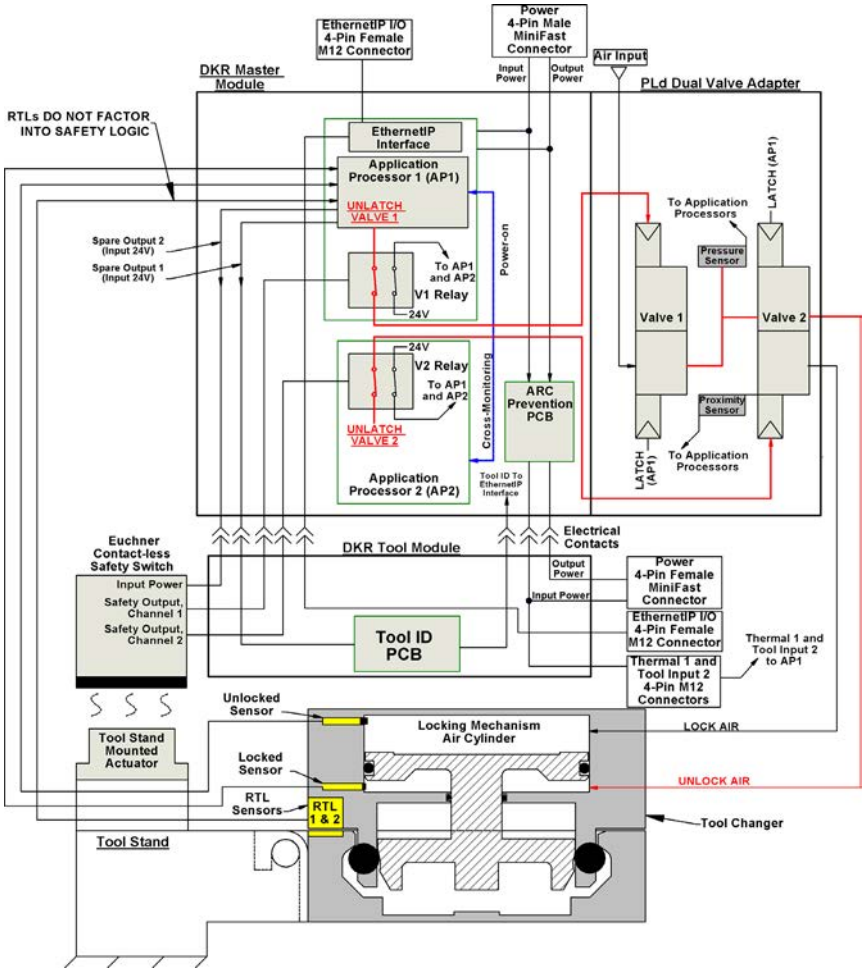

The safety switch (not included with module) is connected to the DKR Tool side module and the actuator is mounted to the tool stand. The safety switch is connected to the DKR Tool module by a (5) conductor M12 cable.

Refer to the Dual Double Solenoid Valve Adapter Manual (9620-20-C-Jxx Valve Adapters Dual Dou Sol Pas Th Prox Pres Sw) for detailed information on the dual double solenoid valve functionality.

CAUTION: It is required to use a PLe rated non-contact safety switch with the DKR module. Use of unapproved switches voids the PLd safety rating. Contact ATI before using another safety rated switch.

Figure 2.25—Single Safety Switch

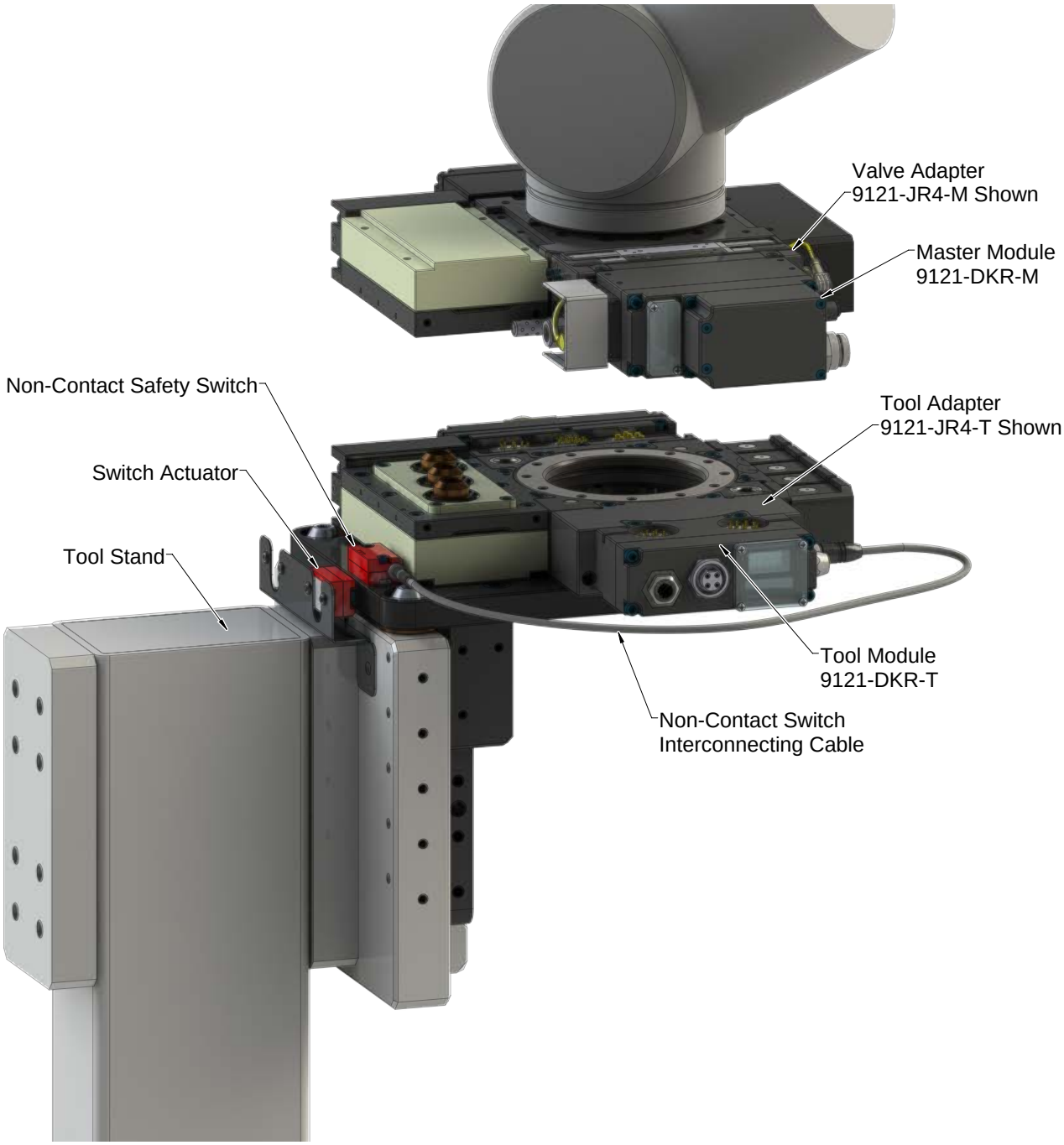

2.5.2 Applicable Safety Standards and Technical Data

Table 2.7—Safety Standards and Technical Data		
Applicable Standards	DIN EN 61508:2011 IEC 61508:2010	Functional safety of safety-related electrical/ electronic/programmable electronic systems
	EN ISO 13849-1:2008	Safety of Machinery - Safety-related parts of control systems
Safety Function	Prevention of Tool release unless Tool is nested in the Tool stand.	
PL	Performance Level	Up to d
Category	3	
SIL	Safety Integrity Level	2
PFH	Average Frequency of dangerous Failure on demand [h^{-1}]	1.03E-08
Service Life	20 years	

2.5.3 Qualified Personnel

The device may only be fitted and started up by qualified staff knowledgeable in safety engineering.

They are qualified if they meet the following requirements:

- They have undergone suitable controls engineering training.
- They were trained by the machine operator to operate the machine and have received instruction in the related safety instructions.
- They have access to the Operating Instructions and the manual.
- They are familiar with the safety standards which are common practice in automation engineering.
- They are familiar with the basic and technical standards related to the specific application.

Comply with all safety and accident prevention regulations when conducting project engineering, installation, startup, operation, and testing of all devices. Only ATI technical personnel are allowed to conduct work on the DKL module hardware and software, if this is not described in this manual.

2.5.4 Power Supply

To be assured of operation within the Functional Safety specification, the user's installation must include power supply monitoring or other means to ensure that the supply voltage is no higher than 30V.

2.5.5 Safety Switches

To be assured of operation within the Functional Safety specification, ATI requires the use of the following safety switches:

- (1) Euchner CES I AP switch connected to the DKR Tool module
- (Up to 4) Euchner CES I AR connected in series
- (Up to 4) SICK STR1 connected in series
- (Up to 4) PILZ PSEN cs3.1p/M12 connected in series
- (Up to 4) ABB JOKAB Adam OSSD Info M12 8 connected in series

Use of (2) to (4) safety switches requires t-piece distributors, an end connector, connection cables, and switches that can be connected is series, refer to *Section 9—Drawings* for detailed information.

NOTICE: The DKR Tool module cannot support more than (4) safety switches in series.

Figure 2.26—Multiple Safety Switches (Example Showing SICK Components)

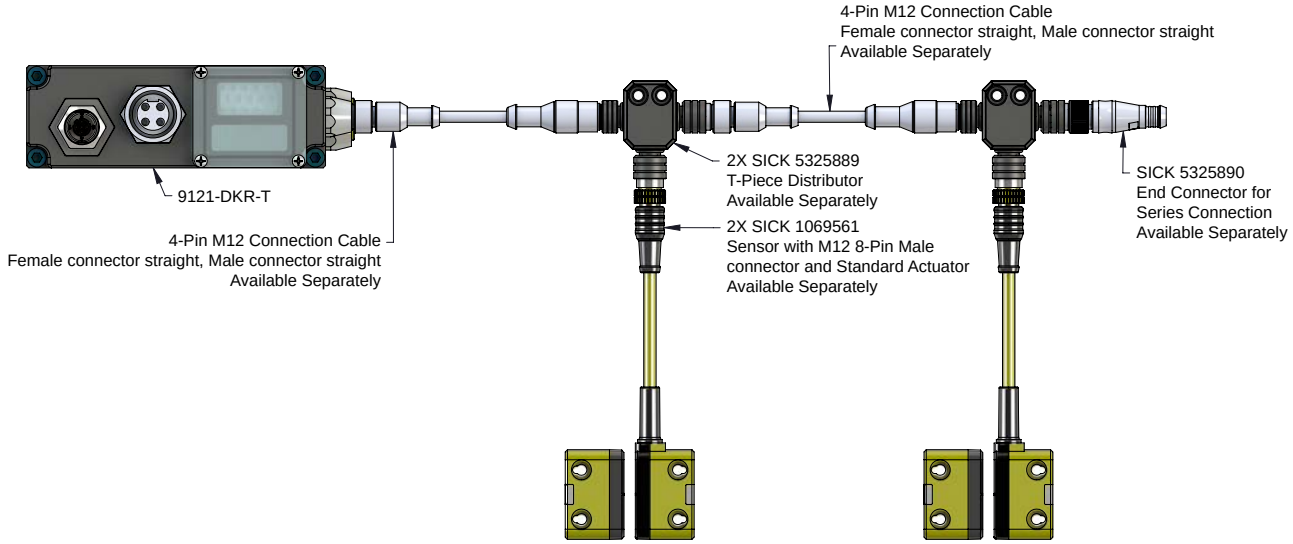

2.5.6 Intended Use

The DKR module can be used in tough industrial environments up to IP65 Protection Class. The intended use of the device and the IP65 Protection Class are only ensured if the Master and Tool are coupled and open plugs and sockets are either closed off by screw plugs or connected to the mating connector cables. When an idle Tool is nested in the Tool Stand, it should be covered to prevent debris from settling on the mating surface refer to *Section 5—Maintenance*.

The intended use also includes the electrical installation in compliance with EMC regulations. The device is designed for use in an industrial environment.

2.5.7 Foreseeable Misuse

- Do not alter the design, engineering, or electrical features of the DKR
- Use only the Safety Switches recommended by ATI; Consult the Safety Switch manufacturers' documentation before installation of their device. Incorrect installation or tampering of the Safety Switch can lead to fatal injuries to personnel.
- Do not take out of operation emergency-off functions or equipment; Refer to the relevant standards, for example, DIN EN ISO13850 Safety of Machinery - Emergency Stop - Design Guidelines.
- Do not use the DKR outside of the application fields described in this manual, the Technical Data, or the Operating Instructions
- Do not use the DKR outdoors, or in continuous operation in liquids
- Do not clean the DKR using high-pressure tools

2.5.8 Safety Checks

Check the safe function of the DKR particularly

1. After any setup work or alteration of the Safety Switch location
2. After the replacement of any of the following devices:

- DKR Master or Tool Module
- Safety Switch
- Dual Double Solenoid Valve Adapter

NOTICE: There should be no audible air leaks from the Valve Adapter. If an air leak is detected immediately discontinue use of the Valve Adapter and contact ATI for assistance.

3. After an extended period without use.
4. After the replacement of any of the following Safety Critical sensors:

- Locked Sensor
- Unlocked Sensor
- Pressure Sensor

NOTICE: Check the pressure sensor by comparing the pressure sensor output to the actual air supply pressure, as measured by a calibrated pressure regulator. The difference must not exceed 6 psi. The Locked and Unlocked sensors can be checked in use by looking for the inputs to turn on/off in accordance with the Recommended Sequence of Operations refer to *Section 4.4—Recommended Sequence of Operation*.

5. After every fault.

2.6 Software

The EDS file for the Master node is available from the ATI website (*https://www.ati-ia.com/Products/toolchanger/software*) or by e-mail. Reference the following part number:

Master module Node EDS File 9031-20-1084

An I/O bitmap for the Master node is provided in the following table. The default setting for the Master module is IP Address 192.168.0.4.

Table 2.8—I/O Bitmap, Robot Inputs from ATI Master, (9121-DKR-M)

Byte	Bit Number	Name	Description/Function
0	0	Tool Latched	Tool Changer is locked.
	1	Tool Unlatched	Tool Changer is unlocked.
	2	OK to Latch	Tool Changer is ready to Latch.
	3	OK to Unlatch	Tool Changer is ready to Unlatch.
	4	Tool Present	Master and Tool are in electrical contact.
	5	Safe SW Missing	Is ON if SSO inputs are jumpered or shorted ON.
	6	Ready-to-Lock 1	Ready-To-Lock Proximity Sensor input.
	7	Ready-to-Lock 2	Ready-To-Lock Proximity Sensor input.
1	0	Tool Number Bit 1	7-bit BCD of Tool ID SW1 and SW2. SW1 is the 1's digit and SW2 is the 10's digit. Example shows Tool-ID of 24 which would be indicated by Byte 1 and Bits 3 (8) and 4 (16) ON 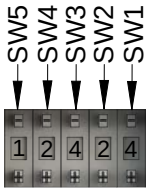
	1	Tool Number Bit 2	
	2	Tool Number Bit 4	
	3	Tool Number Bit 8	
	4	Tool Number Bit 16	
	5	Tool Number Bit 32	
	6	Tool Number Bit 64	
	7	Tool Number Bit 128	Not used max Tool-ID is 99
2	0	Redundant Tool Number Bit 1	7-bit BCD of Tool ID SW3 and SW4. SW3 is the 1's digit and SW4 is the 10's digit. Example shows Redundant Tool-ID of 24 which would be indicated by Byte 2 and Bits 3 (8) and 4 (16) ON 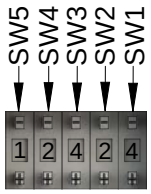
	1	Redundant Tool Number Bit 2	
	2	Redundant Tool Number Bit 4	
	3	Redundant Tool Number Bit 8	
	4	Redundant Tool Number Bit 16	
	5	Redundant Tool Number Bit 32	
	6	Redundant Tool Number Bit 64	
	7	Redundant Tool Number Bit 128	Not used max Tool-ID is 99

Notes:

The pressure reading is a 10-bit ADC. To convert the ADC counts to PSI, multiply the ADC counts by 0.1173. Example: 692 counts x 0.1173= 80 PSI

Table 2.8—I/O Bitmap, Robot Inputs from ATI Master, (9121-DKR-M)			
Byte	**Bit Number**	**Name**	**Description/Function**
3	0	Tool Power is ON	Indicates that Arc Prevention is turned ON and power is provided to the Tool.
	1	Output Power Available	OUTPUT supply voltage on robot side within the allowable range of 20 to 29V (20V <= OUTPUT<= 29V)
	2	Valve Error	Valve or pressure sensor defect. Logical OR of APx_VALVE_ERROR bits.
	3	Pressure Too High	Pressure sensor reports an unlatch pressure higher than the maximum system rating
	4	Pressure Too Low	Pressure sensor report an unlatch pressure lower than the minimum system rating
	5	Pressure Sensor Disconnected	Bit indicating that the pressure sensor is disconnected and/or that there are broken wires in the sensor cable.
	6	Valve Proximity Sensor	Shows status of valve position. The Bit is ON when the Tool Changer is in the Locked positions and OFF when Unlocked.
	7	Thermal 1 Input	Sensor input from Pin 2 of the M12 Thermal Connector on the Tool module.
4	0	Everything is OK	Overall status bit. Is high as long as there are no errors.
	1	TSI1	Input from safety switch that indicates it is safe to unlatch the tool. Should always agree with TSI2 (ATI Note: TSI1 = SSO1)
	2	TSI2	Input from safety switch that indicates it is safe to unlatch the tool. Should always agree with TSI1 (ATI Note: TSI2 = SSO2)
	3	TSI1 Relay	Indicates that safety switch has activated relay V1. Should agree with TSI1 (ATI Note: TSI1 Relay = V1Relay)
	4	TSI2 Relay	Indicates that safety switch has activated relay V2. Should agree with TSI2 (ATI Note: TSI2 Relay = V2Relay)
	5	Tool-ID Error	Tool ID Communication Timeout
	6	Input Power Available	INPUT supply voltage on robot side within the allowable range of 20 to 29V (20V <= INPUT<= 29V)
	7	Tool Input 2	Sensor input from Pin 4 of the M12 Thermal Connector on the Tool module.
Notes: The pressure reading is a 10-bit ADC. To convert the ADC counts to PSI, multiply the ADC counts by 0.1173. Example: 692 counts x 0.1173= 80 PSI			

Table 2.8—I/O Bitmap, Robot Inputs from ATI Master, (9121-DKR-M)			
Byte	**Bit Number**	**Name**	**Description/Function**
5	0	Line Number 1	4-bit BCD of Tool ID SW5.
	1	Line Number 2	Example shows SW5 Tool-ID of 1 which would be indicated by Byte 5 Bits 1 ON. SW5 can only have an Tool-ID of up to 9. 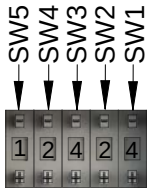
	2	Line Number 4	
	3	Line Number 8	
	4	System Is Unsafe	Any APx_COMM_ERROR, APx_MISMATCH_ ERROR, APx_SAFETY_ERROR, SSO_FAULT sets this bit.
	5	Unsafe Latch	User attempted to latch when unsafe.
	6	Unsafe Unlatch	Unlatch rejected due to unsafe condition present.
	7	Error On Latch	Overload or short circuit on Latch Output.
6	0	AP2 COMM ERROR	AP1 lost communication to AP2
	1	AP1 VALVE ERROR	Valve 2 opening or closing at the wrong time.
	2	AP1 OUTP MISMATCH	AP1 detects that AP2 has come to a different decision than AP1 regarding a safety-critical motion, or AP1 sees UNLATCH_VALVE_CTRL2 is different than expected.
	3	AP1 INP MISMATCH	AP1 detects that AP2 reports different input values than AP1 sees.
	4	MEMORY FAILURE	N/A
	5	Firmware Version Mismatch	
	6	Pressure Reading Bit 0	Pressure reading input from AP2.
	7	Pressure Reading Bit 1	
7	0	Pressure Reading Bit 2	
	1	Pressure Reading Bit 3	
	2	Pressure Reading Bit 4	
	3	Pressure Reading Bit 5	
	4	Pressure Reading Bit 6	
	5	Pressure Reading Bit 7	
	6	Pressure Reading Bit 8	
	7	Pressure Reading Bit 9	
8	0	Minor Revision Bit 0	uC firmware revision.
	1	Minor Revision Bit 1	
	2	Minor Revision Bit 2	
	3	Minor Revision Bit 3	
	4	Major Revision Bit 0	
	5	Major Revision Bit 1	
	6	Major Revision Bit 2	
	7	Major Revision Bit 3	

Notes:

The pressure reading is a 10-bit ADC. To convert the ADC counts to PSI, multiply the ADC counts by 0.1173. Example: 692 counts x 0.1173= 80 PSI

Table 2.8—I/O Bitmap, Robot Inputs from ATI Master, (9121-DKR-M)			
Byte	**Bit Number**	**Name**	**Description/Function**
9	0	AP2 Mismatch Error	N/A
	1	AP2 Comm Error	
	2	Memory Failure	
	3	AP2 VALVE ERROR	Position sensor does not meet expectations.
	4	ERROR ON UNLATCH2	Overload on Unlatch 2 output was detected.
	5	PRESSURE DISCONNECTED	Internal bit indicating that the pressure sensor is disconnected and/or that there are broken wires in the sensor cable.
	6	MEMORY TESTS COMPLETE	N/A
	7	Safe to Unlatch AP2	
10	0	TSI2	
	1	TSI1 Relay	
	2	TSI2 Relay	
	3	SSFAULT	
	4	Unlatch Valve Control 2	
	5	Valve Position	
	6	AP2 Version Error	
	7	AP2 Safety Error	
11	0	AP2 Minor Revision Bit 0	uC firmware revision.
	1	AP2 Minor Revision Bit 1	
	2	AP2 Minor Revision Bit 2	
	3	AP2 Minor Revision Bit 3	
	4	AP2 Major Revision Bit 0	
	5	AP2 Major Revision Bit 1	
	6	AP2 Major Revision Bit 2	
	7	AP2 Major Revision Bit 3	
12	0	MEMORY TESTS COMPLETE	N/A
	1	Raw Locked Sensor	
	2	Raw Unlocked Sensor	
	3	Locked/Unlocked Sensor Fault	Locked and Unlocked sensor inputs true at the same time or swapped. Indicative of failed sensors or not latch/unlatch motion.
	4	ERROR ON UNLATCH1	Overload on Unlatch 1 output was detected.
	5	ERROR ON UNLATCH2	Overload on Unlatch 2 output was detected.
	6	Reserved	
	7	CROSS MONITORING ERROR	Safety System detected mismatch. Logical OR of the Communication with AP2 Fails, APX INP MISMATCH and APX OUTP MISMATCH.
Notes: The pressure reading is a 10-bit ADC. To convert the ADC counts to PSI, multiply the ADC counts by 0.1173. Example: 692 counts x 0.1173= 80 PSI			

Table 2.8—I/O Bitmap, Robot Inputs from ATI Master, (9121-DKR-M)			
Byte	**Bit Number**	**Name**	**Description/Function**
13	0 to 7	Reserved	
14	0 to 7		
15	0 to 7		
Notes: The pressure reading is a 10-bit ADC. To convert the ADC counts to PSI, multiply the ADC counts by 0.1173. Example: 692 counts x 0.1173= 80 PSI			

Table 2.9—I/O Bitmap, Robot Outputs to 9121-DKR-M module			
Byte	**Bit Number**	**Name**	**Description/Function**
0	0	Unlatch	Request Unlock.
	1	Latch	Request Lock.
	2	Clear Errors	Reset errors, allow affected I/O to be reactivated.
	3	Reserved	Reserved.
	4	N/A	Reserved.
	5	N/A	Reserved.
	6	N/A	Reserved.
	7	N/A	Reserved.
1 to 7	Reserved		

3. Installation

The modules are typically installed by ATI prior to shipment. Installation and removal are outlined in the following section. For wiring information refer to *Section 9—Drawings*.

WARNING: Do not perform maintenance or repair(s) on the Tool Changer or modules unless the Tool is safely supported or placed in the tool stand, all energized circuits (for example: electrical, air, water, etc.) are turned off, pressurized connections are purged and power is discharged from circuits in accordance with the customer specific safety practices and policies. Injury or equipment damage can occur with the Tool not placed and energized circuits on. Place the Tool in the tool stand, turn off and discharge all energized circuits, purge all pressurized connections, and verify all circuits are de-energized before performing maintenance or repair(s) on the Tool Changer or modules.

CAUTION: Thread locker applied to fasteners must not be used more than once. Fasteners might become loose and cause equipment damage. Always apply new thread locker when reusing fasteners.

3.1 Master Module Installation

Refer to *Figure 3.1*

Tools required: *5 mm hex key*

Supplies required: *Clean rag, Loctite® 242*

1. Place the Tool in a secure location.
2. Uncouple the Master and Tool plates.
3. Turn off and de-energize all energized circuits (for example: electrical, pneumatic, and hydraulic circuits).
4. Wipe down the mounting surfaces with a clean rag.
5. Using the ledge feature, place the module into the appropriate location on the valve adapter. Align the module with the valve adapter using the dowels in the bottom of the ledge feature.
6. Apply Loctite 242 to the supplied (2) M6 socket head cap screws. Install the (2) M6 socket head cap screws securing the module to the valve adapter using a 5 mm hex key. Tighten to 70 in-lbs (7.9 Nm).
7. Set the DIP switches. The default IP address setting is 192.168.0.4. Refer to *Section 2.2.2—Settings Page*.
8. Connect the (L) Lock, (U) Unlock, and (R1 and R2) RTL sensor cable connectors to the module.
9. Connect the valve proximity sensor cable to the connection S1 on the module.
10. Connect the valve pressure sensor cable to the connection S2 on the module.
11. Connect the power cable and Ethernet/IP cable connectors to the module.
12. After a few seconds, it should be communicating on the network.
13. Safely resume normal operation.

Notes:

The pressure reading is a 10-bit ADC. To convert the AC counts to PSI, multiply the ADC counts by 0.1173. Example: 692 counts x 0.1173= 80 PSI

Figure 3.1—Master Module Installation

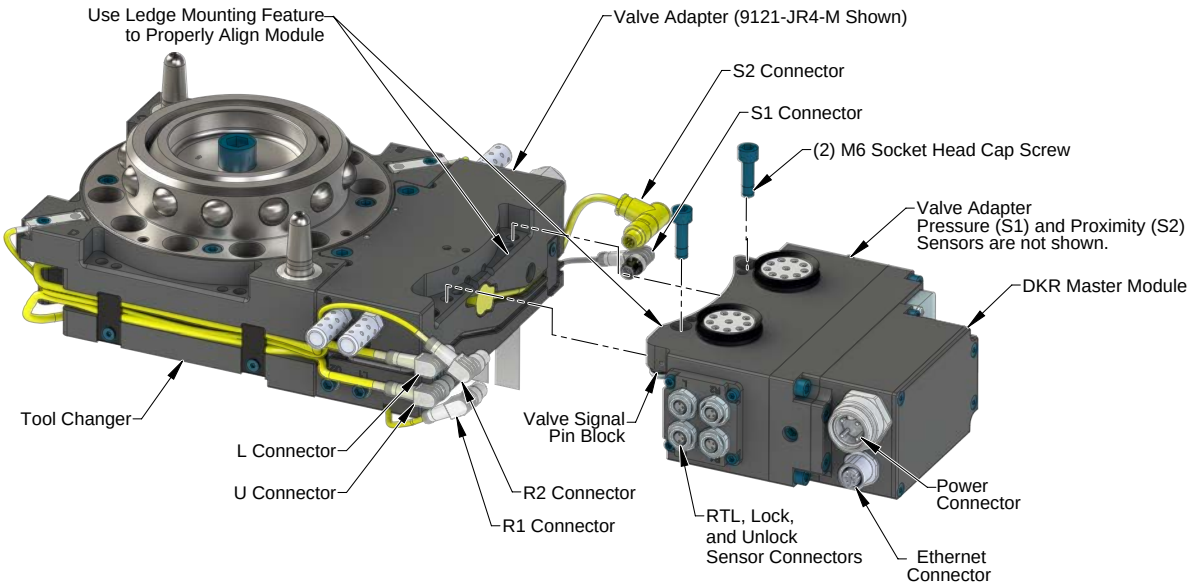

3.2 Master Module Removal

Tools required: *5 mm hex key*

1. Place the Tool in a secure location.
2. Uncouple the Master and Tool plates.
3. Turn off and de-energize all energized circuits (for example: electrical, pneumatic, and hydraulic circuits).
4. Disconnect the (L) Lock, (U) Unlock, and (R1 and R2) RTL sensor cable connectors from the module.
5. Disconnect the valve proximity sensor cable from the connection S1 on the module.
6. Disconnect the valve pressure sensor cable from the connection S2 on the module.
7. Disconnect the power cable and Ethernet/IP cable connectors from the module.
8. Support the module and remove the (2) M6 socket head cap screws using a 5 mm hex key. Lower the module until it clears the guide pin.

3.3 EtherNet/IP Configuration

Several parameters for the EtherNet/IP modules need to be configured prior to operating the Tool Changer. Please refer to *Section 2—Product Information* of this manual for detailed information on installation and operation of the EtherNet/IP modules.

CAUTION: Ethernet cabling layout is critical to the overall performance of the system. Interface connections from the controller up the robot arm to the ATI Master should be minimized. Use of hi-flex, robot rated cable is essential for long term performance.

3.4 Utility Schematic

Refer to *Section 9—Drawings* for customer interface and wiring details.

3.5 Tool Module Installation

Tools required: *5 mm hex key*

Supplies required: *Clean rag, Loctite 242*

1. Place the Tool in a secure location.
2. Uncouple the Master and Tool plates.
3. Turn off and de-energize all energized circuits (for example: electrical, pneumatic, and hydraulic circuits).
4. Wipe down the mounting surfaces with a clean rag.
5. Using the ledge feature, place the module into the appropriate location on the tool adapter. Align the module with the tool adapter spacer using the dowels in the bottom of the ledge feature.
6. Apply Loctite 242 to the supplied (2) M6 socket head cap screws. Install the (2) M6 Socket Head Cap Screws securing the module to the tool adapter using a 5 mm hex key. Tighten to 70 in-lbs (7.9 Nm).
7. Connect the safety sensor cables to the module.
8. If required, connect the Thermal 1 and Tool input 2 cables to the module.
9. Connect the power cable and Ethernet/IP cable connectors to the module.
10. Set the Tool-ID. Refer to *Section 3.7—Setting the Tool-ID.*
11. Safely resume normal operation.

Figure 3.2—Tool Module Installation

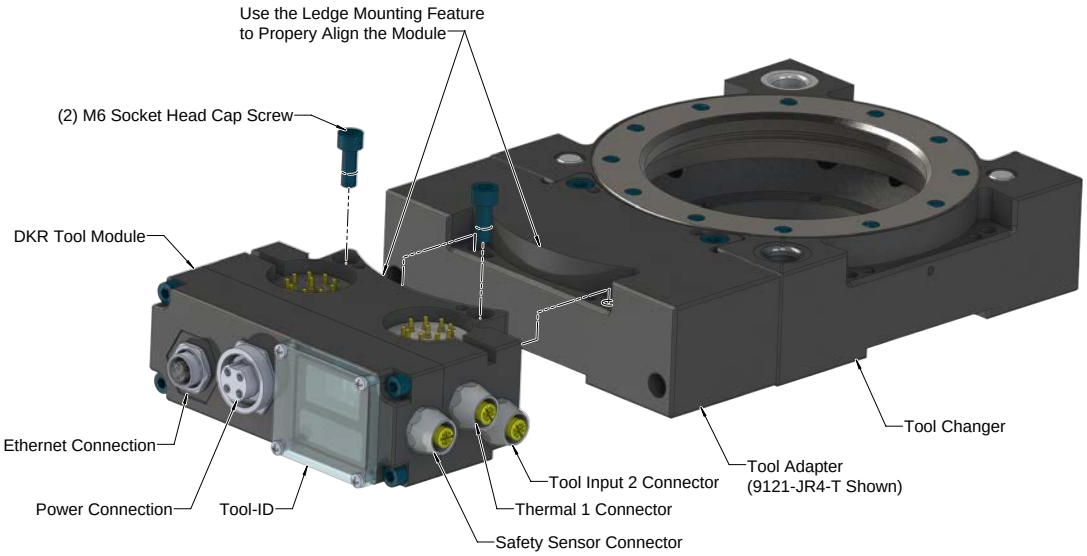

3.6 Tool Module Removal

Tools required: *5 mm hex key*

1. Place the Tool in a secure location.
2. Uncouple the Master and Tool plates.
3. Turn off and de-energize all energized circuits (for example: electrical, pneumatic, and hydraulic circuits).
4. Disconnect the safety sensor cables from the module.
5. Disconnect the power cable and Ethernet/IP cable connectors from the module.
6. Disconnect the Thermal 1 and Tool input 2 cables from the module.
7. Support the module, remove the (2) M6 socket head cap screws using a 5 mm hex key and lift the module.

3.7 Setting the Tool-ID

Tools required: *Phillips screwdriver*

There are (5) pushbutton switches provided on the Tool module. The DKR Tool module uses SW1 (1's digit) and SW2 (10's digit) to set the Tool-ID up to a value of 99. SW3 (1's digit) and SW4 (10's digit) are used to set the redundant Tool-ID up to a value of 99. The Tool-ID and Redundant Tool-ID must be set to the same number, example: If Tool-ID is set to a value of 24 then redundant Tool-ID must be set to a value of 24. SW5 can be used as an additional Tool-ID up to a value of 9.

Figure 3.3—Setting the Tool ID

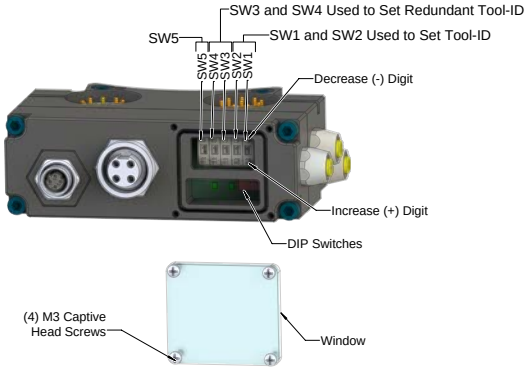

Table 3.1—I/O Bitmap, Robot Tool-ID Inputs from ATI Master, (9121-DKR-M)

Byte	Bit #	Name	Tool-ID Examples			
			(8 +16)=24 (0 2 4 2 4)	(4 +64)=68 (0 6 8 6 8)	Not Present[1]	Description/Function
1	0	Tool Number Bit 1	OFF	OFF	ON (1)	Tool ID SW1 and SW2. SW1 is the 1's digit SW2 is the 10's digit.
	1	Tool Number Bit 2	OFF	OFF	ON (2)	
	2	Tool Number Bit 4	OFF	ON (4)	ON (4)	
	3	Tool Number Bit 8	ON (8)	OFF	ON (8)	
	4	Tool Number Bit 16	ON (16)	OFF	ON (16)	
	5	Tool Number Bit 32	OFF	OFF	ON (32)	
	6	Tool Number Bit 64	OFF	ON (64)	ON (64)	
	7	Tool Number Bit 128	OFF	OFF	ON (128)	Not used max Tool-ID is 99
2	0	Redundant Tool Number Bit 1	OFF	OFF	ON (1)	Redundant Tool ID SW3 and SW4. SW3 is the 1's digit SW4 is the 10's digit.
	1	Redundant Tool Number Bit 2	OFF	OFF	ON (2)	
	2	Redundant Tool Number Bit 4	OFF	ON (4)	ON (4)	
	3	Redundant Tool Number Bit 8	ON (8)	OFF	ON (8)	
	4	Redundant Tool Number Bit 16	ON (16)	OFF	ON (16)	
	5	Redundant Tool Number Bit 32	OFF	OFF	ON (32)	
	6	Redundant Tool Number Bit 64	OFF	ON (64)	ON (64)	
	7	Redundant Tool Number Bit 128	OFF	OFF	ON (128)	Not used max Tool-ID is 99
5	0	Line Number 1	OFF	OFF	ON (1)	Tool ID SW5.
	1	Line Number 2	OFF	OFF	ON (2)	
	2	Line Number 4	OFF	OFF	ON (4)	
	3	Line Number 8	OFF	OFF	ON (8)	

Notes:

1. If a tool is not present, all the bits shown in *Table 3.1* will be ON. Both Tool-ID SW1 and SW2 and redundant Tool-ID SW3 and SW4 will be reported as 255 (1+2+4+8+16+32+64+128=255). Tool-ID SW5 will be reported as 15 (1+2+4+8=15).

1. Loosen the (4) M3 pan head captive screws and remove the Tool-ID window.
2. Use a non-conductive tool (for example:, plastic stylus) to press on the Tool-ID push buttons to increase (+) or decrease (-) the digit values.

NOTICE: When replacing the window, ensure that the seal is re-positioned correctly to prevent fluid leakage into the module.

3. Re-install the Tool-ID window and tighten the (4) M3 pan head captive screws.

4. Operation

A recommended Sequence of Operations is provided in *Section 4.4—Recommended Sequence of Operation*. This procedure is to be used as a general guide when programming a robot or PLC for use with a Tool Changer and DKR control/signal modules. This procedure is intended for "automatic" modes used during normal application processes.

CAUTION: Improper cable routing can result in wires and cables being pinched in the joint between the Tool Changer plates and premature failure of the electrical connectors. Properly route and secure all cables, particularly on the Master side.

The following section details the functional characteristics of the module.

NOTICE: The 0 and 24VDC supply lines are required to be on certain pin locations of the customer interface connector. Refer to *Section 9—Drawings* for pin out information and location of the I/O signals.

Refer to the specific Tool Changer manual for coupling conditions of the Tool Changer and *Section 4.4—Recommended Sequence of Operation*. When coupled, the Tool module is communicated with, Tool-ID is read (if equipped), and attached end-effectors can be used.

4.1 Lock, Unlock, and Read-To-Lock (RTL) Sensor Cable LED Behavior

The Lock, Unlock, and RTL sensor cables are equipped with two LEDs. The Green LED indicates the sensor has power and the yellow LED indicates the switch has been made. The LED behavior is affected by the control/signal module.

Table 4.1—Sensor Cable LED Behavior for Common Tool Changer Positions

Tool Changer Position	Sensor cable LED Behavior			
Unlocked (Tool Changer Master plate free of stand with no Tool plate attached)	RTL (R1) Sensor	ON OFF	ON ON	Unlock (U) Sensor
	RTL (R2) Sensor	ON OFF	ON OFF	Lock (L) Sensor
Ready to Lock (Tool Changer Master plate with Tool plate parallel and at a distance of 1.22 mm or less from each other)	RTL (R1) Sensor	ON ON	ON ON	Unlock (U) Sensor
	RTL (R2) Sensor	ON ON	ON OFF	Lock (L) Sensor
Locked (Tool Changer Master plate with Tool plate attached in fully locked position)	RTL (R1) Sensor	ON ON	ON OFF	Unlock (U) Sensor
	RTL (R2) Sensor	ON ON	ON ON	Lock (L) Sensor
Missed Tool (Tool Changer Master plate locked with no Tool plate attached)	RTL (R1) Sensor	ON OFF	ON OFF	Unlock (U) Sensor
	RTL (R2) Sensor	ON OFF	ON OFF	Lock (L) Sensor

Figure 4.1—Lock, Unlock, and RTL Sensor cable LED Behavior (Shown in Locked Position)

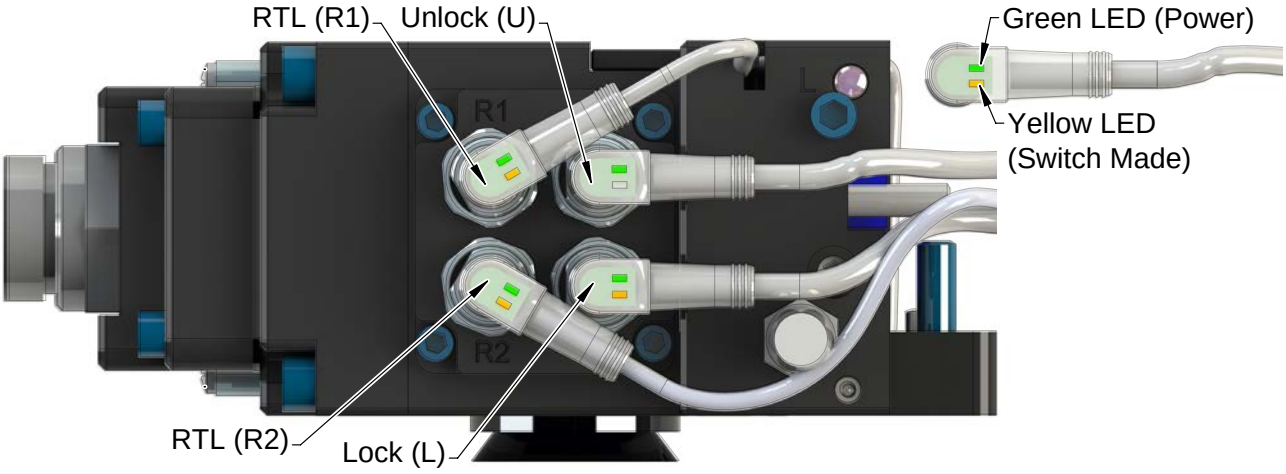

(Control module shown for reference only)

4.2 Inputs

The following describes the most critical inputs from the ATI Master module.

4.2.1 Tool Latched

A proximity sensor input indicating that the coupling mechanism is in the Lock position. The “Tool Latched” bit in the bitmap must be set to ON when the Locked sensor input is on.

4.2.2 Tool Unlatched

A proximity sensor input indicating that the coupling mechanism is in the Unlocked position. The bit “Tool Unlatched” in the bitmap is only be set to ON when the Unlocked sensor input is on.

4.2.3 OK To Latch

The OK To Latch bit indicates when the preconditions for Latching the Tool Changer have been met. The preconditions include:

- No Errors (System is Unsafe, Pressure Too High, Pressure Too Low, AP2 Safety Error).
- Input and Output Power within operating range (20-29 V).
- Air pressure within operating range 60-100 psi (4.1-6.9 Bar).
- Unlatch Tool is off.
- Latch Tool is off.
- Tool Latched is off.

4.2.4 OK To Unlatch

The OK To Unlatch bit indicates when the preconditions for Unlatching the Tool Changer have been met. The preconditions include:

- No Errors (System is Unsafe, Pressure Too High, Pressure Too Low, AP2 Safety Error).
- Input and Output Power within operating range (20-29 V).
- Air pressure within operating range 60-100 psi (4.1-6.9 Bar).
- Unlatch Tool is off.
- Latch Tool is off.
- Tool Unlatched is off.
- The Tool is in the tool stand as indicated by TSI1, TSI2, TSI1 Relay, and TSI2 Relay bits are on.

4.2.5 Tool Present

An input indicating the Master module is electrically connected to the tool.

- Required for Arc Prevention Circuit and Tool-ID.

4.2.6 Safe SW Missing

An input indicating the TSI Safety Switch is bypassed with jumper plug or cable is damaged. The Tool Changer can be unlatched when this input is ON.

4.2.7 Ready-To-Lock 1 and Ready-To-Lock 2

Proximity sensor inputs that indicate the Tool Changer Master is close to the tool. It is recommended that these inputs be used to indicate when conditions are acceptable to couple the Tool Changer. These proximity sensors are installed in the Master body and sense targets in the Tool body that indicate the Master is adjacent to the tool (within ~ 0.06” or 1.5 mm).

4.2.8 Tool Power Is ON

The Tool Power Is ON bit indicates the Arc Prevention circuit has power to the tool side.

4.2.9 Output Power Available

An input indicating the presence of Output Power at the ATI Master module. Power must be between 20V and 29V otherwise the Tool Changer does NOT Unlatch.

4.2.10 Valve Proximity Sensor

Shows status of the solenoid valve 2 position. When the valves are providing air to lock the Tool Changer, the Valve Proximity Sensor bit is ON. When the valves are providing air to unlock the Tool Changer, the Valve Proximity Sensor bit is OFF.

4.2.11 Thermal 1 Input

Thermal 1 sensor input on the Tool module.

4.2.12 Everything Is OK

Everything is OK indicates that there are no detected errors in general, not just errors that affect Unlatch. This bit is ON as long as the conditions shown in *Table 4.2* are met.

Table 4.2—Everything Is OK bit Conditions

Condition	Byte and Bit
No safety errors reported by either microcontroller.	Byte 5 bit 4
“Unsafe Unlatch” is not on.	Byte 5 bit 6
“Unsafe Latch” is not on.	Byte 5 bit 5
“Latch not completed” is not on (which is a logical-or of “latch not completed,” “lock/unlock sensor fault,” and “unlatch motion not completed”)	Byte 12 bit 3
Pressure too high is not on.	Byte 3 bit 3
Pressure too low is not on.	Byte 3 bit 4
No communication error with tool board.	Byte 4 bit 5
US1 power is good.	Byte 4 bit 6.
Switched power is good.	Byte 3 bit 0

Safety errors are triggered by the condition shown in *Table 4.3*:

Table 4.3—Safety Errors

Condition	Byte and Bit
Memory test errors	Byte 7 bit 7
The microcontrollers disagree on the value of safety-critical inputs, such as the SSO inputs.	Byte 6 bit 3
The microcontrollers disagree on what the critical safety outputs, such as the unlatch signal should be.	Byte 6 bit 2
A valve error was detected, e.g valve prox error or pressure failure during unlatch sequence.	Byte 6 bit 1
Communication errors between two safety microcontrollers (Byte 6 bit 0, also logical-ored into byte.	Byte 12 bit 7
The two safety microcontrollers are not running the same firmware version.	Byte 6, bit 0
Unlatch motion not verified (which is a logical-or of “latch not completed,” “lock/unlock sensor fault,” and “unlatch motion not completed).	Byte 12 bit 3
Pressure does not enter the expected range (between max and min allowed pressure) during unlatch sequence. In this case, the pressure-too-high or pressure-too-low bit will be set as appropriate. This could be because the proper pressure is not being providing, or a failure in the valve.	N/A

4.2.13 TSI1 and TSI2

Discrete inputs from the safety switch, which are on when the Tool Changer is in the stand.

4.2.14 TSI1 Relay and TSI2 Relay

TSI1 Relay is a normally open relay driven to closure by Channel 1 of the Safety Switch (TSI1). Similarly, the TSI2 Relay is driven to closure by Channel 2 of the Safety Switch (TSI2). Both of these inputs must be on when the Tool Changer is in the tool stand, otherwise the Tool Changer does NOT Unlatch.

4.2.15 Input Power Available

An input indicating the presence of Input and Logic Power at the ATI Master module. Power must be between 20V and 29V otherwise the Tool Changer does NOT Unlatch.

4.2.16 Tool Input 2

Tool Input 2 connector on the Tool module.

4.3 Error Conditions

The following describes the reported error conditions and explains how to reset the condition.

4.3.1 Valve Error

If the module detects an error in the function or position of either valve, a Valve Error bit is set. Refer to the 9620-20-C-Jxx Valve Adapters with Dual Double Solenoid, Valve Pass-through, Proximity and Pressure Sensors for potential valve failure modes.

The error condition can be reset with the Clear Errors.

4.3.2 Pressure Too High

If the module detects the air pressure above 100 psi (6.9 Bar) then the Pressure Too High bit is set. The error can be reset by supplying air at the correct pressure and then applying the Clear Errors. See Notes section of *Table 2.8* for pressure determination.

4.3.3 Pressure Too Low

If the module detects the air pressure below 60 psi (4.1 Bar) then the Pressure Too Low bit is set. The error can be reset by supplying air at the correct pressure and then applying the Clear Errors. See Notes section of *Table 2.8* for pressure determination.

4.3.4 Pressure Sensor Disconnected

The Pressure Sensor Disconnected bit indicates that the pressure sensor is disconnected and/or the sensor cable is damaged.

If the pressure sensor is left disconnected, the System Is Unsafe error is set. The error condition can be reset with the Clear Errors.

4.3.5 Tool-ID Error

The Tool-ID is available to the Master within 250 ms from the time the changer is coupled; otherwise a Tool-ID Error is set in the bit map. If the Master and Tool modules are coupled and the Tool ID fails to be reported, a Tool-ID Error is set.

The error condition can be reset with a rising edge of Tool Present or the Clear Errors.

4.3.6 System Is Unsafe

An error has occurred that could cause an Unsafe Unlatch, if the error is not fixed. Refer to *Table 4.4* for the errors that trigger a System Is Unsafe error.

4.3.7 Unsafe Latch

The module will generate an “Unsafe Latch” error if the robot commands the Tool Changer to lock prior to a 22 second diagnostic delay after the module is power cycled.
If the Latch command is received and not all of the above conditions are met, the Unsafe Latch error bit is set. This error condition is reset when a new Latch command is received and the OK To Latch conditions are met.

4.3.8 Unsafe Unlatch

The Unsafe Unlatch error is set when the user sends an Unsafe Unlatch command. The module will set an Unsafe Unlatch error if the robot commands the Tool Changer to unlock prior to a 22 second diagnostic delay after the module is power cycled. This error bit is reset when a new Unlatch command is received (Unlatch command removed and reapplied) and the OK To Unlatch conditions are met or with the rising edge of the Clear Errors.

4.3.9 Error On Latch

This bit indicates that a short circuit or overload condition on the Latch output has been detected. The error condition can be reset with the Clear Errors.

4.3.10 Lock/Unlock Sensor Fault

This bit indicates that the Locked and Unlocked sensor inputs are true at the same time or swapped. It can also indicate that the Locked sensor did not turn on after the Tool Changer after the Latch command has been executed or that the Unlocked sensor did not turn on after an Unlatch command has been executed. This error condition can be reset with the Clear Errors.

Table 4.4—Error Conditions that Trigger System Is Unsafe Error

Error Bit	Error description	Triggers System Is Unsafe Error	Reset with
Valve Error	Valve module pressure and/or position error	Yes	Clear Errors
Pressure Too High	Air supply to valve adapter above 100 psi	No (Yes only during Unlatch)	Clear Errors
Pressure Too Low	Air supply to valve adapter below 60 psi	No (Yes only during Unlatch)	Clear Errors
Pressure Sensor Disconnected	Pressure Sensor not connected	Yes	Clear Errors
Tool ID Error	Tool-ID timeout error	No	Rising edge of Tool_ Present; Power Cycle
Unsafe Latch	Latch requested under unsafe conditions	No	Rising edge of Latch or Clear Errors
Unsafe Unlatch	Unlatch requested under unsafe conditions	No	Rising edge of Unlatch or Clear Errors
Error On Latch	Short circuit detection on Latch output	No (Yes only during Latch)	Clear Errors

4.4 Recommended Sequence of Operation

The following conditions must be maintained during programing and operation:

- Input and Output power (24VDC nominal) is available and within acceptable range (20 - 29 VDC)
- Air is supplied to the integrated valve and within acceptable range 60 - 100 psi (4.1 - 6.9 Bar)

Figure 4.2—LED Behavior Free of Tool

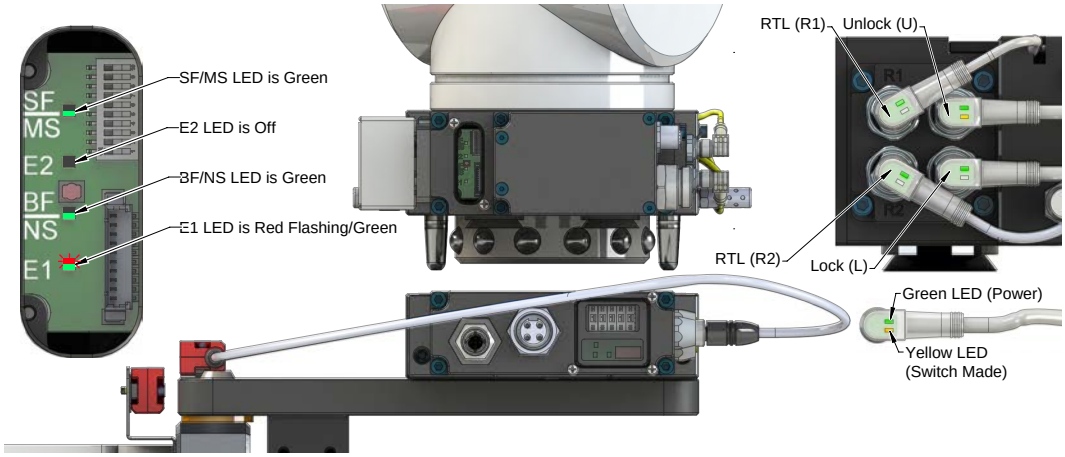

1. The robot and Tool Changer Master are free of the stand or storage location, the Tool Changer is uncoupled and the Tool Changer locking mechanism is fully retracted (unlocked condition). The Tool is by itself in the tool stand. No error or fault conditions exist.
   a. The following inputs are OFF:
      i. Tool Latched
      ii. Tool Present
      iii. Ready-To-Lock 1
      iv. Ready-To-Lock 2
      v. TSI1
      vi. TSI2
      vii. TSI1 Relay
      viii. TSI2 Relay
      ix. OK to Unlatch
      x. Tool-ID invalid (all the Tool-ID Bits are ON)
      xi. Tool Power is ON
      xii. The ATI tool and any downstream device(s) are offline.
   b. The following inputs are ON:
      i. Output Power Available
      ii. Input Power Available
      iii. Tool Unlatched
      iv. OK To Latch
   c. The following outputs are OFF:
      i. Unlatch
      ii. Latch

CAUTION: The Master locking mechanism must be fully retracted prior to the Master entering the Tool. Failure to do so causes ball bearings to damage the Tool Bearing Race. If the Tool Changer is locked or in a missed tool condition, use the solenoid valve manual override procedure (refer to the 9620-20-C-Jxx Valve Adapters with Dual Double Solenoid, Valve Pass-through, Proximity and Pressure Sensors manual) to unlock the Tool Changer before attempting to latch Master with Tool.

Figure 4.3—LED Behavior 0.15” Away from Tool

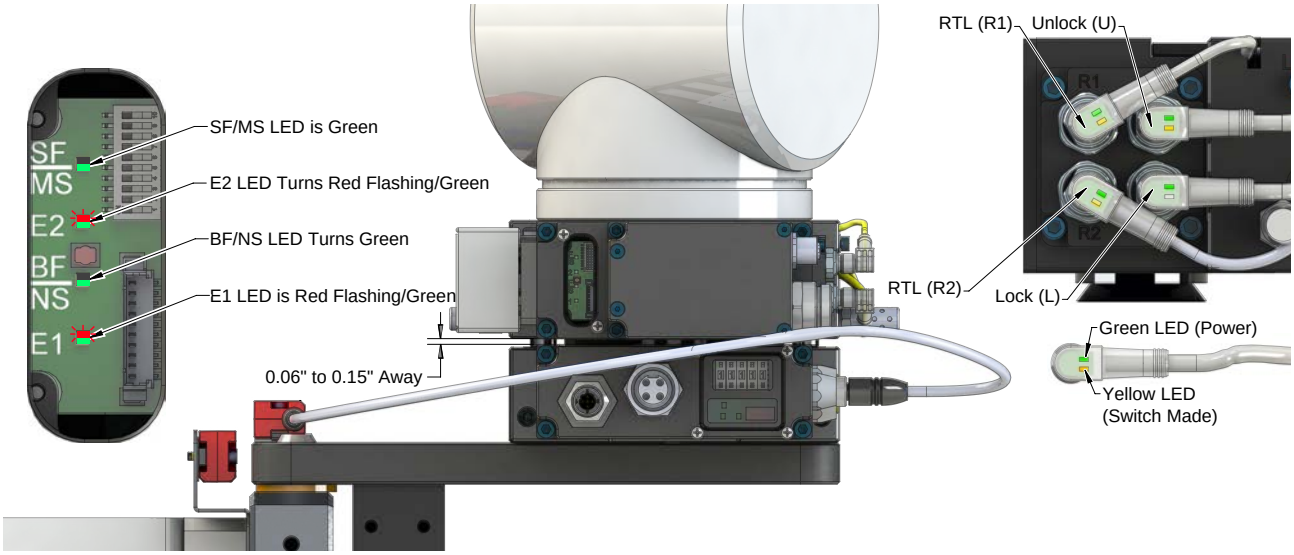

2. Robot and Master move into the Tool, are parallel and within 0.06” to 0.15” of the Tool (for example: the module electrical contact pins are touching but the Ready-to-Lock sensors have not yet sensed the targets on the Tool).
   a. Once the robot move to within 0.06” from the Tool, the **Ready-To-Lock 1** and **Ready-To-Lock 2** inputs turn ON, indicating that it is OK to couple the tool.
   b. The **Tool Present** turns ON, indicating that it is OK to couple the tool.

Figure 4.4—LED Behavior Coupled with Tool

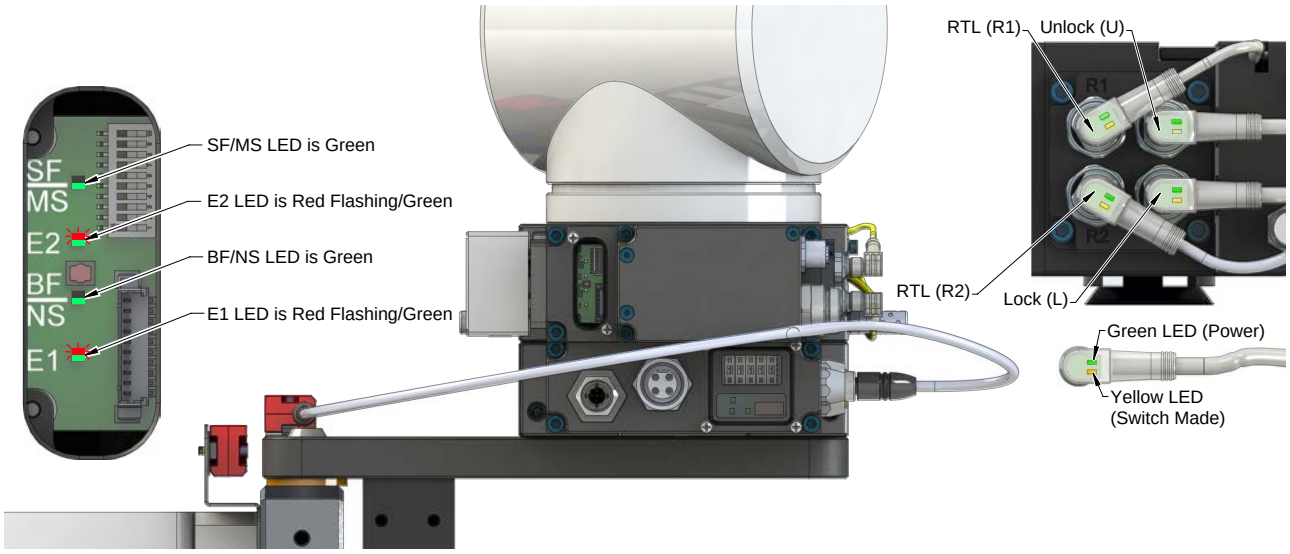

3. Couple the Tool Changer.
   a. Turn **Latch** output ON.
   b. The **Tool Unlatched** input turns OFF indicating piston travel. The **Tool Latched** input turns ON, indicating that the coupling operation is complete.
   c. Read the **Tool-ID**.
   d. After the **Tool Latched** input turns ON, turn the **Latch** output OFF.
   e. Arc Prevention circuit turns power on (**Tool Power is ON** input turns ON) and communication is established with downstream device(s).
   f. After the **Tool Latched** input turns ON, the power to the Tool Stand Interlock (TSI) Safety Switches turns on.

Figure 4.5—LED Behavior Coupled with Tool Away from Stand

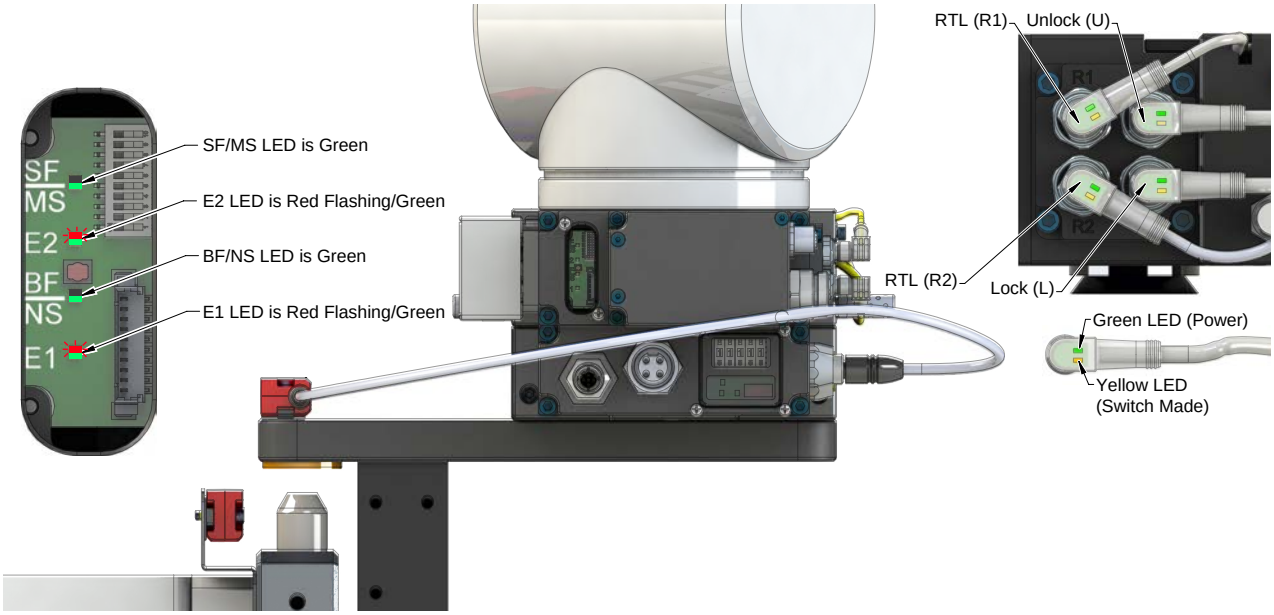

4. Robot moves away from the tool stand with the Tool Changer coupled.
   a. The **TSI1**, **TSI2, TSI1 Relay**, and **TSI2 Relay** inputs turn OFF.
   b. Check to verify **Safe SW Missing** input is OFF.

> **CAUTION:** Check that the **OK To Unlatch** and **Safe SW Missing** are OFF at this time. This is a critical part of the safety system.

5. Normal operation
   a. The following inputs are OFF:
      i. Tool Unlatched
      ii. OK To Unlatch
      iii. TSI1
      iv. TSI2
      v. TSI1 Relay
      vi. TSI2 Relay
   b. The following inputs are ON:
      i. Output Power Available
      ii. Input Power Available
      iii. Tool Latched
      iv. Tool Present
      v. Ready-To-Lock 1
      vi. Ready-To-Lock 2
      vii. OK To Latch
      viii. Tool-ID
      ix. Tool Power is ON
   c. The following outputs are OFF:
      i. Unlatch
      ii. Latch

6. Robot moves into the tool stand with the Tool Changer coupled.
   a. When the Tool is returned to the stand, the TSI Safety Switches are activated. The **TSI1**, **TSI2, TSI1 Relay**, and **TSI2 Relay** inputs turn ON.
   b. Check to verify **Safe SW Missing** input is OFF.
   c. OK To Unlatch input turns ON, indicating that it is safe to uncouple the Tool Changer.

Figure 4.6—LED Behavior Coupled with Tool

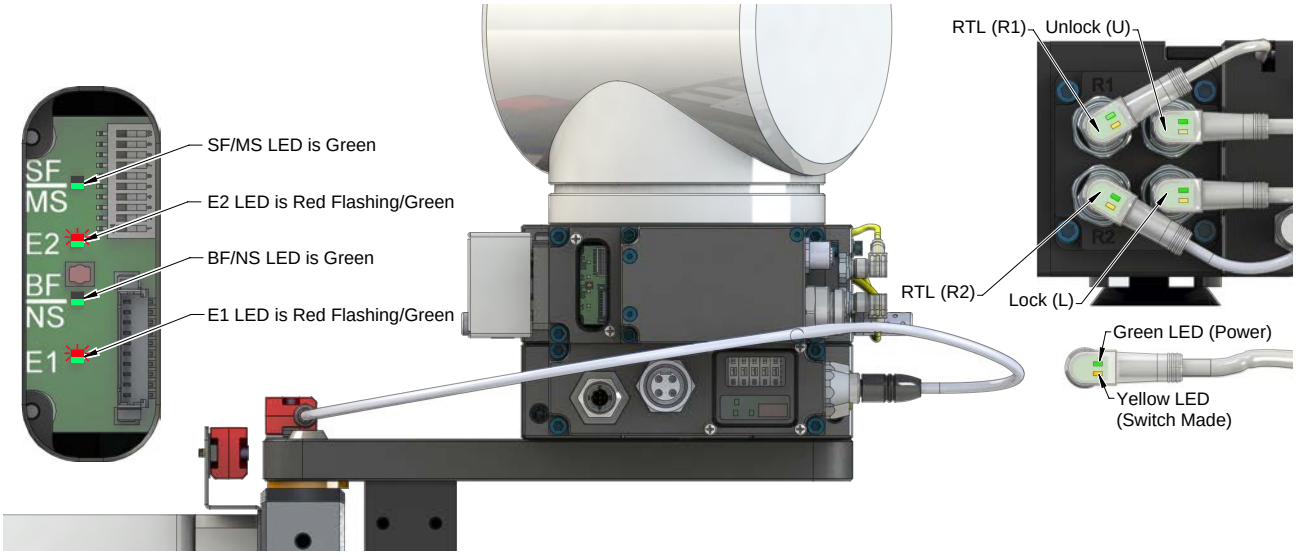

7. Uncouple the Tool Changer.
   a. Turn **Unlatch** output ON.
   b. Arc Prevention circuit turns power off (**Tool Power is ON** input turns OFF) and communication is lost with downstream device(s).
   c. The **Tool Latched** turns OFF and the **Tool Unlatched** turns ON, indicating that the uncoupling operation is complete.
   d. After the **Tool Unlatched** turns ON, turn the **Unlatch** output OFF.
   e. After the **Tool Unlatched** turns ON, the **TSI1**, **TSI2, TSI1 Relay**, **TSI2 Relay** inputs, and (TSI) Safety Switch power turns OFF.
   f. After **Tool Present** turns OFF, **Tool-ID** is unavailable.

Figure 4.7—LED Behavior 0.15” Away from Tool

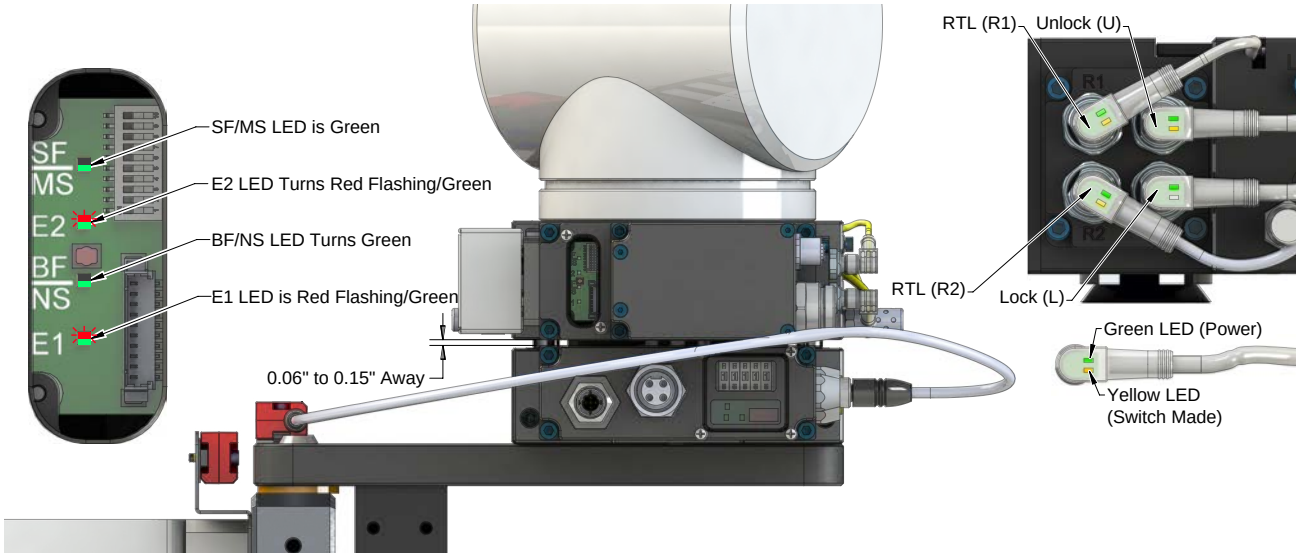

8. Robot and Master move to free space (>0.15” from the Tool).
   a. The following inputs are OFF:
      i. OK To Unlatch
      ii. Tool Latched
      iii. Tool Present
      iv. Ready-To-Lock 1
      v. Ready-To-Lock 2
      vi. TSI1
      vii. TSI2
      viii. TSI1 Relay
      ix. TSI2 Relay
      x. Tool-ID invalid (all 1→ 0xFF255)
      xi. Tool Power is ON
   b. The following inputs are ON:
      i. Output Power Available
      ii. Input Power Available
      iii. Tool Unlatched
      iv. OK To Latch
   c. The following outputs are OFF:
      i. Tool Latch
      ii. Tool Unlatch

5. Maintenance

The modules are not designed to be field serviced as all point-to-point wiring connections are soldered. Component replacement is limited to the V-ring seal on the Master.

WARNING: Do not perform maintenance or repair(s) on the Tool Changer or modules unless the Tool is safely supported or placed in the tool stand, all energized circuits (for example: electrical, air, water, etc.) are turned off, pressurized connections are purged and power is discharged from circuits in accordance with the customer specific safety practices and policies. Injury or equipment damage can occur with the Tool not placed and energized circuits on. Place the Tool in the tool stand, turn off and discharge all energized circuits, purge all pressurized connections, and verify all circuits are de-energized before performing maintenance or repair(s) on the Tool Changer or modules.

If the Tool Changer is used in dirty environments (for example: welding or deburring applications), limit the exposure of the Tool Changer. Idle Tool assemblies should be covered to prevent debris from settling on the mating surface. Also, the Master assembly should be exposed for only a short period of time during Tool change and down time.

Under normal conditions, no special maintenance is necessary; however, perform periodic inspections to assess for unexpected damage and assure long-lasting performance. Perform the following visual inspection monthly:

- Inspect mounting fasteners to verify they are tight and if loose, then tighten to the torque. Refer to *Section 3—Installation*.
- Cable connections should be inspected during maintenance periods to ensure they are secure. Loose connections should be cleaned and re-tightened. Inspect cable sheathing for damage, repair or replace damaged cabling. Loose connections or damaged cabling are not expected and may indicate improper routing and/or strain relieving.
- Inspect the Master and Tool pin blocks for any pin damage, debris or darkened pins every 50,000 cycles or 6 months. Refer to *Section 5.1—Pin Block Inspection and Cleaning*.
- Inspect V-ring seals for wear, abrasion, and cuts every 6 months. If worn or damaged, replace. Refer to *Section 6.2.1—Seal Replacement*.

5.1 Pin Block Inspection and Cleaning

Tools required: *Nylon Brush (ATI part number 3690-0000064-60)*

1. Place the Tool in a secure location.
2. Uncouple the Master and Tool plates.
3. Turn off and de-energize all energized circuits (for example: electrical, pneumatic, and hydraulic circuits).
4. Inspect the Master and Tool pin blocks for debris or darkened pins.

Figure 5.1—Inspect Master and Tool Pin Blocks

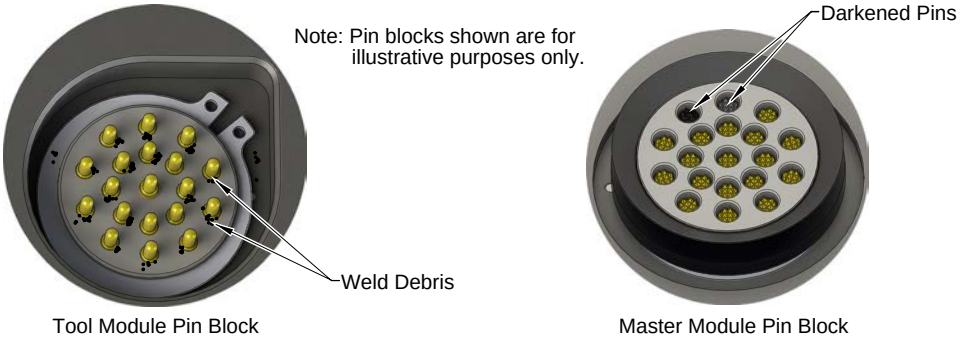

5. If debris or darkened pins are present, use a vacuum to remove the debris, and clean using a nylon brush (ATI part number 3690-0000064-60).

> **NOTICE:** Do not use an abrasive media and/or cleaners or solvents to clean the contact pins. Using abrasive media and/or cleaners or solvents will cause damage to the contact surface or cause pins to stick. Clean contact surfaces with a vacuum or non-abrasive media such as a nylon brush (ATI part number 3690-0000064-60).

Figure 5.2—Clean Pin Blocks with a Nylon Brush

6. Inspect the Master and Tool pin blocks for stuck pins or pin block damage.

Figure 5.3—Stuck Pin and Pin Block Damage

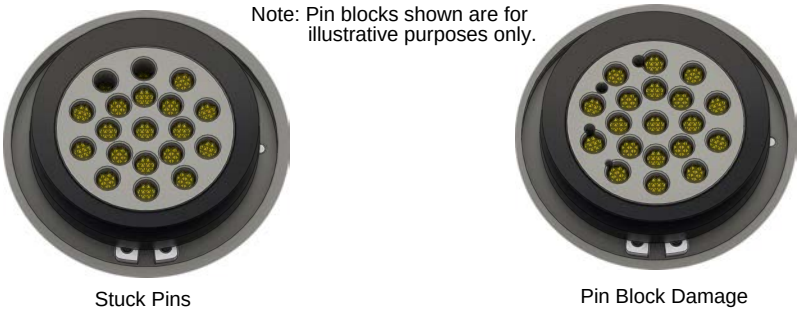

7. If pins become stuck or if there is damage to the pin block, contact ATI for either a possible pin replacement procedure or module replacement.
8. Safely resume normal operation.

6. Troubleshooting and Service Procedures

The following section provides troubleshooting information to help diagnose conditions with the Tool Changer and service procedures to help resolve these conditions.

WARNING: Do not perform maintenance or repair(s) on the Tool Changer or modules unless the Tool is safely supported or placed in the tool stand, all energized circuits (for example: electrical, air, water, etc.) are turned off, pressurized connections are purged and power is discharged from circuits in accordance with the customer specific safety practices and policies. Injury or equipment damage can occur with the Tool not placed and energized circuits on. Place the Tool in the tool stand, turn off and discharge all energized circuits, purge all pressurized connections, and verify all circuits are de-energized before performing maintenance or repair(s) on the Tool Changer or modules.

6.1 Troubleshooting

Before attempting to troubleshoot the module, confirm the following are true:

- The Locked, Unlocked, Pressure, and Valve Proximity sensor cables are connected and undamaged.
- The air supplied to the valve is within 60 - 100 psi (4.1 - 6.9 Bar).
- The valves are in-phase. Refer to *Section 4.3.1—Valve Error*.
- Input and Output power is 24 +/- 15% VDC.
- The Safety Switch is within sensing range of the Actuator.

Refer to the following table for further troubleshooting information.

Table 6.1—Troubleshooting		
Symptom	**Possible Cause**	**Correction**
Unit unable to lock or unlock.	Debris caught between the Master and Tool plates	Clean debris from between Master and Tool plates. Verify mounting fasteners is secure and does not protrude above the mating surfaces.
	Ball bearings are not moving freely	Verify the ball bearings are moving freely. Clean and lubricate as needed. Refer to the Maintenance section of the Tool Changer manual for instructions.
	Valve adapter exhaust muffler clogged	The valve adapter exhaust muffler may be clogged. Refer to the valve adapter manual for more information.
	TSI switch not functioning properly.	Verify the TSI switch is functioning and properly adjusted. TSI switches will NOT have power unless the Tool Changer is locked.
	Unlocked bit	Verify the Unlocked bit is ON.
	Signals are mapped incorrectly	Verify signals are mapped and are communicating properly. Refer to *Section 9—Drawings* for electrical schematic.
	If the locking mechanism has been actuated and both the lock and unlock signals are read as “OFF” (false), then a “missed tool” condition has likely occurred. This can occur under the following conditions: 1.The Tool is not positioned properly in the Tool Stand or not present. 2.The operator commands the Tool Changer to Latch when no Tool is present or forces the Tool Changer to Latch using the solenoid valve manual overrides.	The Tool Changer is in a missed tool condition, use the solenoid valve manual override procedure (refer to the 9620 20 C Jxx Valve Adapters with Dual Double Solenoid, Valve Pass through, Proximity and Pressure Sensors manual) to unlock the Tool Changer before attempting to latch Master with Tool.
	Master and Tool are within the specified No-Touch zone	Verify the Master and Tool are within the specified No-Touch zone when attempting to lock. Refer to the Installation – tool stand Design Section of the Tool Change manual for specifications.
	Solenoid valve not functioning	The valve adapter exhaust muffler may be clogged. Refer to the valve adapter manual for more information.
	Unlatch conditions have not been met	Verify the OK to Unlatch input is ON, refer to Section *Section 4.2.4—OK To Unlatch* for conditions.
	Latch conditions have not been met	Verify the OK to Latch input is ON, refer to Section *Section 4.2.3—OK To Latch* for conditions.

Table 6.1—Troubleshooting		
Symptom	**Possible Cause**	**Correction**
Sensors malfunctioning (but EtherNet/IP is operating correctly)	Tool plate is not secured properly or debris is trapped between surfaces	Ensure that the Tool plate is securely held to the Master plate, that nothing is trapped between their surfaces.
	Sensor cables damage or incorrectly connected	Verify the cables are connected correctly and not damaged, replace if damaged. Refer to the Troubleshooting Section of the Tool Changer manual.
	Sensors are not set correctly or not functioning	Verify the sensors are set correctly and functioning. Refer to the Troubleshooting Section of the Tool Changer manual.
Loss of communication	Worn or damaged contact pins	Inspect module contact pins for debris/wear/damage.
	Product upstream and downstream of Tool Changer failed or damaged	Check product upstream and downstream of Tool Changer for failure. This failure can “appear” to be caused by the Tool Changer or affect Tool Changer performance.
No power on the Tool side	Latch command not issued	Verify the Latch command has been issued by the robot.
	Tool Power is ON bit is OFF	Verify the Tool Power is ON bit is ON.
	Loss of Input power on the Master side causes loss of Auxiliary Power to the Tool. The Arc Prevention Circuit relies on Input power to operate	Restore Input power to the Master to restore Auxiliary Power to Tool.
Tool-ID not reported	Tool Present bit is OFF	Verify the Tool Present bit is ON.
TSI switches not turning on after Latch command	Locked sensor malfunctioning	Test locked sensor, replace if malfunctioning.
TSI switches not turning off after Unlatch command	Unlocked sensor malfunctioning	Test unlocked sensor, replace if malfunctioning.

6.2 Service Procedures

The following service procedures provide instructions for inspection, adjustment, test or replacement of components.

6.2.1 Seal Replacement

Parts required: *Refer to Section 9—Drawings*

The seal protects the electrical connection between the Master and Tool module. Replace the seal if it becomes worn or damaged.

1. Place the Tool in a secure location.
2. Uncouple the Master and Tool plates.
3. Turn off and de-energize all energized circuits (for example: electrical, pneumatic, and hydraulic circuits).
4. To remove the existing seal, pinch the edge of the seal and pull the seal away from the pin block on the Master module.
5. To install a new seal, stretch the new seal over the shoulder of the pin block.
6. Push the seal hub down against the pin block.
7. Safely resume normal operation.

Figure 6.1—V-ring Seal Replacement

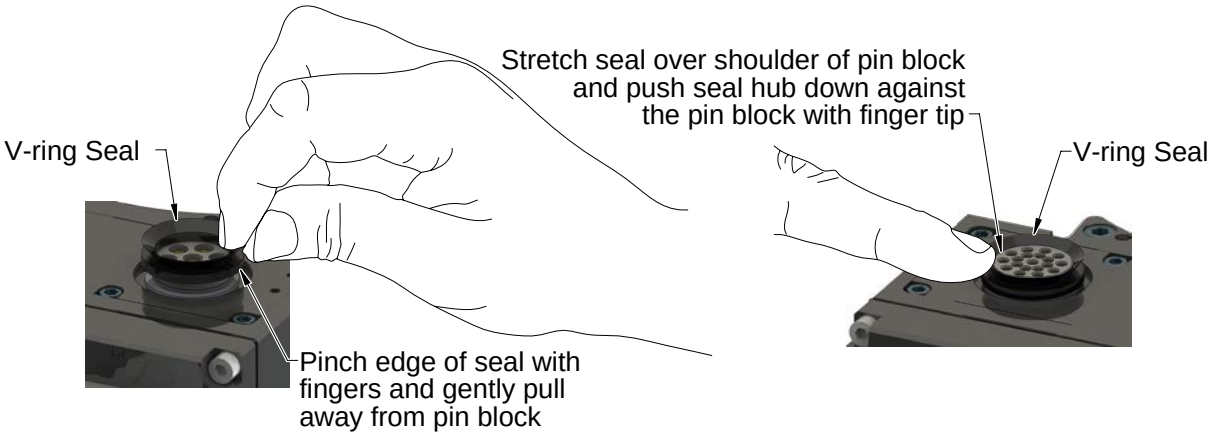

7. Serviceable Parts

Refer to *Section 9—Drawings*

7.1 Master Module Mounting Fasteners

Table 7.1—Master Module Mounting Fasteners	
Part Number	**Description**
3500-1066020-21A	M6 x 20 Socket Head Cap Screw, SS, ND Microspheres, 0-3 uncoated lead thds. 5-7 coated thds. IFI525

7.2 Tool Module Mounting Fasteners

Table 7.2—Tool Module Mounting Fasteners	
Part Number	**Description**
3500-1066016-15A	M6 x 16 Socket Head Cap Screw, DIN 912 A4 S/S (316) ND Ind. Microspheres Epoxy, Yellow. 0-3 uncoated lead thds. 5-7 coated thds.

7.3 Accessories

Table 7.3—Accessories	
Part Number	**Description**
3690-0000064-60	Brush, Blue Nylon All Purpose (Contact Pin Cleaning)

8. Specifications

Table 8.1—Master Module	
9121-DKR-M	Ethernet/IP Master module with integrated Ethernet switch, supports DHCP functionality and EtherNet/IP Quick Connect, Input and Auxiliary Power pass-through, TSI on Tool. M12 D-coded Female Connector for Ethernet communication, Mini 4-Pin Male Connector for Output, Input and Logic Power. Lock, Unlock and RTL sensing with LED cables on the Master and Tool-ID from the Tool module are also supported. Arc Prevention Circuit applied to Auxiliary Switched and Auxiliary Unswitched. Mates with 9121-DKR-T.
Power Supply Requirements	The power source for input and output power must be capable of outputting an operating voltage (reverse polarity protected, regulated) of 24 +/- 15% VDC. To be assured of operation within the functional safety specification, the user's installation must include power supply monitoring or other means to ensure that the supply voltage is no higher than 30 V.
Default Configuration	I/P Address: 192.168.0.4 Subnet Mask: 255.255.0.0 Gateway: 0.0.0.0 **Note:** The DKR-M DKR-T modules conform to the EtherNet/IP Adaptation of CIP Specification, Edition 1.12; © 2011, ODVA The DHCP option is set to "disabled"
Connector(s)	Auxiliary Power: 4-pin male Minifast EtherNet: 4-pin female M12 D-coded (Note: requires Shielded and grounded EtherNet cable) Integrated Tool Changer I/O: (4) 3-pin female M8 connectors supporting Tool Changer Locked, Unlocked, and Ready-to-Lock proximity sensors. Integrated Connection to Valve Adapter Diagnostic Sensors: 3-pin female M8 connector supporting Valve Adapter proximity sensor 4-pin female M8 connector supporting Valve Adapter pressure sensor Integrated Connection to Dual Double Solenoid Valve Adapter: 4-pin Block supporting Latch and Unlatch signals
Pass-through Power	5A, 20 to 29VDC
Current Draw	Power: 180mA @ 24VDC, Master only (Unlocked sensor "ON", Locked) Valve Power (switched Auxiliary Power): 250mA @ 24VDC (Solenoid Valve) (only when locking or unlocking Tool Changer).
Temperature	32°F to 120°F (0 to 49°C).
Enclosure	IP65
Weight	1.9 lbs (0.86 kg)

Table 8.2—Tool Module	
9121-DKR-T	Ethernet/IP Tool module with integrated Ethernet switch, 4-Pin M12 D-Coded connector for Ethernet communication, Mini 4-Pin Male Connector for Switched and Un-Switched Auxiliary Power, 5-Pin M12 to support TSI on the Tool, 4-Pin M12 Connector to Support Thermal 1 Input, 4-Pin M12 Connector to Support Tool Input 2, 0-99999 Tool-ID through to the Master module. Supports Arc Prevention on the Master. Mates with DKR-M.
Default Configuration	(5) Tool-ID switches, each reading a (0–9) position (all factory set to Tool Position 1)
Connector(s)	Auxiliary Power: 4-pin female Minifast EtherNet: 4-pin female M12 D-coded (Note: requires Shielded EtherNet cable) Connection to TSI Switch: 5-pin female M12, supports up to (4) safety switches refer to *Section 2.5—For Your Safety*. Connection to Tool Input 2 : 4-pin female M12, supports PNP 3-wire proximity sensors, dry-contact switches, and various 2-wire sensors of which Omron E2EQ-X7D1-M1GJ, Azbil/Yamatake FL7S-5W6W-CN03B, PEPPERL-FUCHS NMB2-18GM55-Z3-C-FE-300 mm-V2, and IFM IGS209, are examples that have been tested. Connection to Thermal 1 Input : 4-pin female M12, supports PNP 3-wire proximity sensors, dry-contact switches, and various 2-wire sensors of which Omron E2EQ-X7D1-M1GJ, Azbil/Yamatake FL7S-5W6W-CN03B, PEPPERL-FUCHS NMB2-18GM55-Z3-C-FE-300 mm-V2, and IFM IGS209, are examples that have been tested.
Pass-through Power	5A, 20 to 29VDC
Tool-ID	(5) Independent Tool-ID switches, each reading a (0–9) position
Temperature	32°F to 120°F (0 to 49°C).
Enclosure	IP65
Weight	1.0 lbs (0.45 kg)

9. Drawings

Drawings are available on the *ATI website* or by contacting an ATI representative.