Table of Contents

Glossary **C-3**

C. Control and Signal Modules **C-4**

DKS—Ethernet/IP Control/Signal Module **C-4**

1. Product Overview **C-4**

1.1 DKS Master Module **C-5**

1.2 DKS Tool Module **C-5**

2. Product Information **C-6**

2.1 Master Module Information **C-6**

2.1.1 Class 1 Connection Information C-6

2.1.2 Integrated Web Server C-6

2.1.3 Network Settings C-8

2.1.4 Switch Module Settings (Ethernet Switch) C-10

2.1.5 Communication Diagnostics (Ethernet Switch) C-11

2.1.6 Internal Diagnostics C-12

2.1.7 DIP Switches on the Master Module C-13

2.1.8 Module and Network Status LED C-13

2.1.9 Using Ethernet Quick-Connect C-14

2.2 Arc Prevention Circuit **C-15**

2.2.1 Arc Prevention Circuit Behavior during Coupling C-15

2.2.2 Arc Prevention Circuit Behavior during Uncoupling C-16

2.3 Tool Module **C-17**

2.3.1 Tool-ID Switches C-17

2.4 Tool Side TSI **C-17**

2.4.1 TSI Behavior for Module C-18

2.5 Software **C-19**

3. Installation **C-21**

3.1 Master Module Installation **C-21**

3.2 Master Module Removal **C-22**

3.3 Tool Module Installation **C-23**

3.4 Tool Module Removal **C-23**

3.5 Master Module IP address DIP Switch Configuration **C-24**

3.6 Ethernet/IP Configuration **C-25**

3.7 Utility Schematic **C-25**

3.8 Setting the Tool-ID **C-26**

4. Operation C-27
4.1 Lock, Unlock, and RTL Sensor Cable LED Behavior C-28
4.2 Recommended Sequence of Operation C-29
5. Maintenance C-31
5.1 Pin Block Inspection and Cleaning C-32
6. Troubleshooting and Service Procedures C-33
6.1 Troubleshooting Procedures C-33
6.1.1 Solenoid Valve Manual Override Procedure C-35
6.2 Diagnostic Functions and Error Handling C-36
6.2.1 Power Status C-36
6.2.2 Valve Power Status C-36
6.2.3 Error on Latch or Unlatch Output C-36
6.2.4 “COMM OK” bit C-36
6.2.5 “Tool Power is On” bit C-36
6.2.6 “Unlatch Enabled” bit C-36
6.3 Service Procedures C-37
6.3.1 V-ring Seal Replacement C-37
7. Serviceable Parts C-38
8. Specifications C-39
9. Drawings C-40
9.1 DKS-M DKS-T C-40

Glossary

Term	Definition
Auxiliary Power	24VDC Power Supply interface provided that supports Switched and Unswitched circuits.
Clear Errors	An output supplied to the ATI Master node to clear all error conditions.
Comm. Error	An input indicating the status of the Tool-ID communication between Master and Tool modules.
EOAT	End Of Arm Tooling
Error on Latch Output	An input indicating a short circuit overload condition exists with the Latch output.
Error on Unlatch Output	An input indicating a short circuit overload condition exists with the Unlatch output.
Latch (Lock)	An output supplied to the ATI Master to couple the Tool Changer.
Locked	A proximity sensor input indicating that the coupling mechanism is in the Lock position.
MDI and MDI-X	MDI stands for Media Dependant Interface. The X refers crossover, the fact that the transmit wires on an MDI Ethernet device are connected to the receive wires on an MDIX Ethernet device.
Input and Logic Power Good	An input indicating the presence of Input Power (sourced from the Un-switched Power Supply) to the ATI Master.
RTL (Ready-To-Lock)	A proximity sensor that indicates the Tool Changer Master is close to the Tool.
RTLV	An input provided for health status monitoring of the RTL Relay.
Switched Auxiliary Power	One circuit of the auxiliary power supply is tied into the E-stop circuit and is switched off when the circuit is broken.
Tool-ID	An input from the Master node reporting the values from the Tool-ID switches on the Tool module.
Tool Present	A hard-wired input (sourced from the Tool) indicating that the Master and Tool modules are electrically connected to each other.
TSI	The Tool Stand Interlock feature is a custom ATI safety solution and circuit designed to only allow Tool Changer release while in the stand or storage location.
TSIV	An input supported for monitoring of a Tool Stand limit switch used with the TSI circuit.
TSRV	An input provided for health status monitoring of the TSI Relay.
TSI Switch	A switch is installed on the EOAT and is used to indicate that the EOAT is in the stand or storage location.
TSI Relay	A relay present in the ATI Tool module that is driven by the closure of the TSI Switch, therefore completing the Tool side portion of the TSI circuit, allowing the Tool Changer to be unlatched.
Unlatch	The output supplied to the ATI Master Ethernet/IP node to uncouple the Tool Changer.
Unlocked	A proximity sensor input indicating that the coupling mechanism is in the Unlocked position.
Valve Power Available	An input indicating the presence of Valve Power (= Switched Auxiliary Power) at the ATI Master.

C. Control and Signal Modules

DKS—Ethernet/IP Control/Signal Module

1. Product Overview

The Ethernet/IP modules enable the user to control and communicate with ATI's Heavy Automation Robotic Tool Changers using Ethernet/IP. It also passes the Ethernet/IP network through a managed switch to the Tool side. With the default switch settings it supports Ethernet/IP Quick Connect. This allows utilization of Ethernet/IP on the robot side and on the Tool side with short connection times.

Control of the Tool Changer is through the Master Node along with the reporting of Tool Changer I/O, such as: Lock, Unlock, and Ready-to-Lock signals. The Tool side module supports Tool-ID reported through the Master side and functions as a pass-through for the Ethernet/IP network and power to downstream equipment.

When the Tool Changer is coupled, the Master and Tool modules pass signals using a spring pin block. A V-ring seal surrounds the pin block and is designed to be water resistant but not waterproof when modules are coupled. Refer to *Section 9—Drawings*.

General fault reporting is supported for the presence of power for Logic/Inputs and the Tool Changer valve. Advanced diagnostic and fault reporting is supported for output short circuit and overload conditions as well as for the presence of Tool-ID. Refer to *Section 2—Product Information* and *Section 4—Operation* for more information on these attributes.

The DKS module incorporates ATI's exclusive Arc Prevention Circuit which extends the life of all electrical power contacts on the pin block. Refer to *Section 2.2—Arc Prevention Circuit* for more information about this feature.

An electrical interface is provided on the Master module for support of a double-solenoid integrated valve (single-solenoid valve is not supported). A double solenoid valve is provided with the master valve adapter for Lock/Unlock control of the Tool Changer. The user is only required to provide a pneumatic supply source to the Tool Changer.

The Unlock signal to the solenoid valve is routed through a Tool Stand Interlock (TSI) safety circuit that prevents the robot from unlocking the Tool from the Master when the mated assembly is not in a tool stand.

1.1 DKS Master Module

A 5-pin connector provides the power supply of the DKS's Ethernet/IP interface, sensor inputs, and output power to the Tool module. A 4-pin M12 D-coded connector provides Ethernet/IP communication interfaces with the Master and downstream tooling.

Figure 1.1—DKS Modules

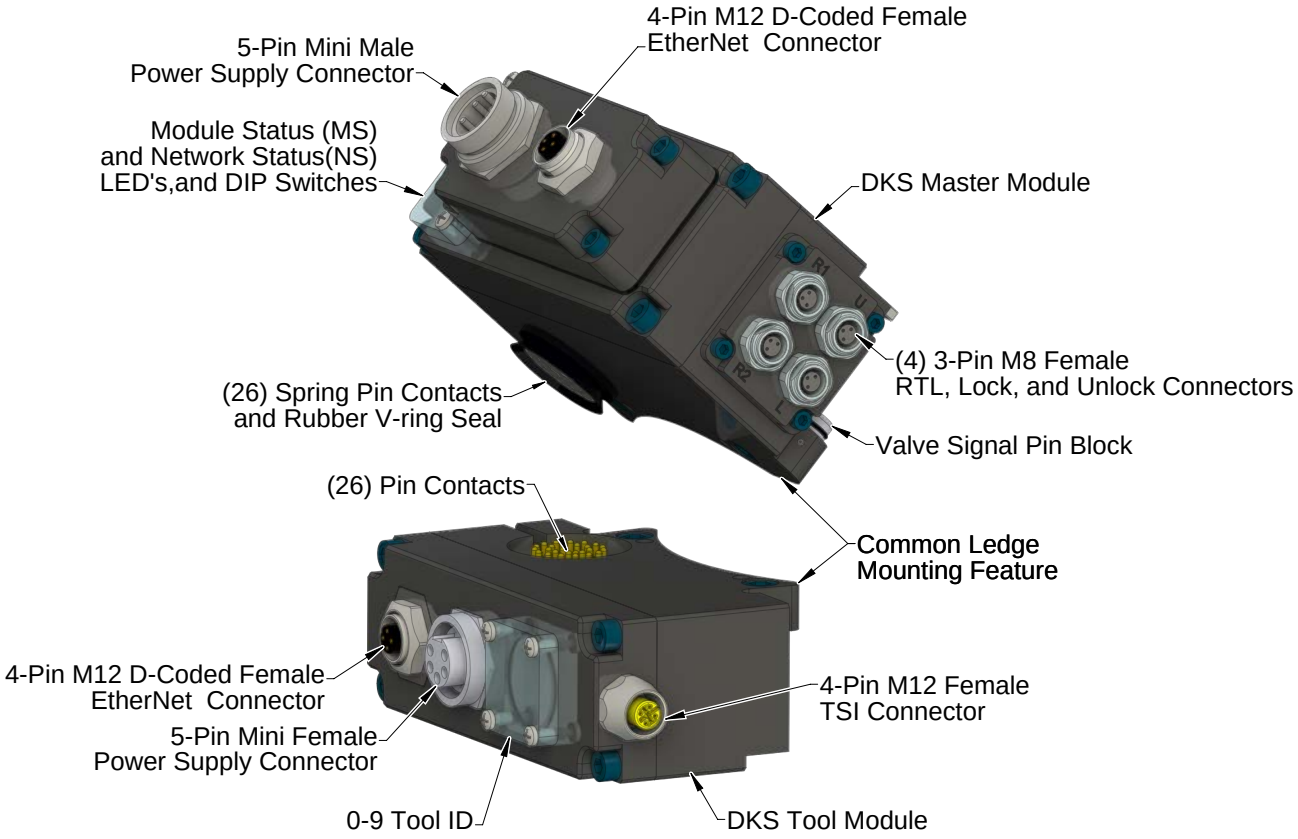

1.2 DKS Tool Module

The Tool-ID feature on the DKS Tool module identifies Tools, by a unique value (0-9), used by the Tool Changer. Use the push-button switch to set the Tool-ID. The Tool-ID is reported through the Master module bitmap. See *Section 2—Product Information* for Ethernet/IP bitmap and detailed I/O information.

A 4-pin M12 D-coded connector provides Ethernet/IP communication interfaces with the downstream tooling. A 5-pin Mini connector provides on the auxiliary power to the downstream tooling.

2. Product Information

The DKS modules employ a 4-pin Mini connector for output supply power and input/logic power, for the power supply of its Ethernet/IP interface and sensor inputs. refer to *Section 9—Drawings* for specific module wiring and connector interface information.

Prior to using the Tool Changer and the Ethernet/IP modules, various hardware settings must be configured. Ethernet/IP module users should be familiar with Ethernet/IP standards.

2.1 Master Module Information

The module operates as a server on the Ethernet/IP network. It supports Class 3 Connected Explicit Messaging, UCMM Explicit Messaging, and Class 1 Connected Cyclic I/O Messaging. The Master node does not support client functionality.

2.1.1 Class 1 Connection Information

Table 2.1 lists the Class 1 Connection Information for the DKS Master module.

Table 2.1—Class 1 Connection Information

	Instance	Size in Bytes
Configuration	128	0
Input	7	8
Output	37	8

2.1.2 Integrated Web Server

The module's integrated web server hosts several web pages. One of the pages provides configuration options for communication settings. (refer to *Figure 2.1)*

A web browser is required to access the web server. The module's web pages use simple HTML and do not require any plug-ins.

To bring up the main page of the web server:

1. Type the module's IP address into the browser's address field and press Enter.
2. Click on the **Communications** button on the menu bar to open the Communication Settings menu. This screen allows to configure the module's network settings such as IP address, subnet mask, default gateway, enable or disable the DHCP. The Robot and Tool side port switch module settings such as Auto-Negotiation, speed setting, enable or disable Auto-MDIX can also be configured.

Figure 2.1—Integrated Web Server Communication Settings Page

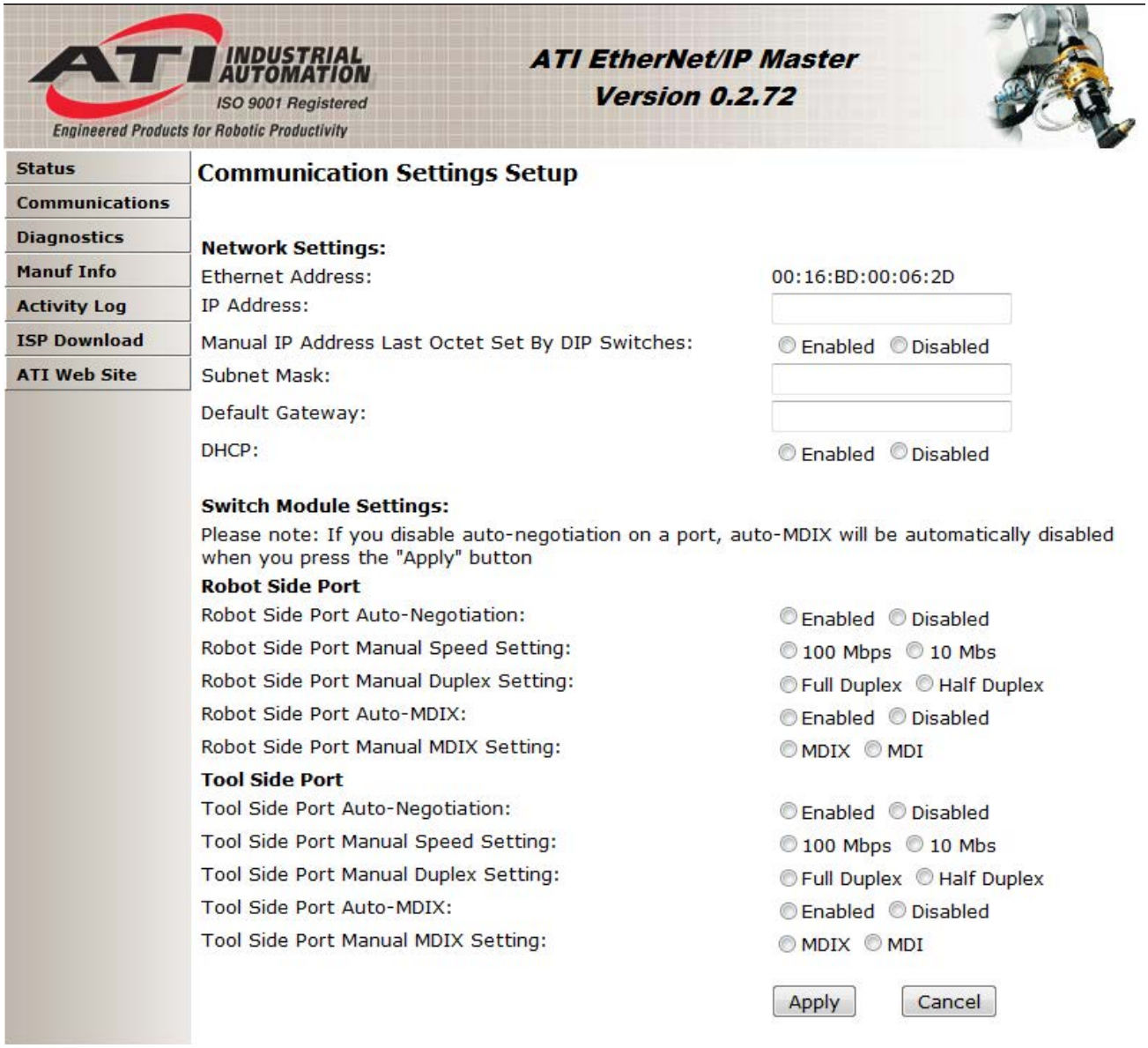

NOTICE: The Communication Settings Setup Screen is shown for reference only, refer to *Section 2.1.3—Network Settings* for the Network Settings defaults and *Section 2.1.4—Switch Module Settings (Ethernet Switch)* Switch Module Settings Robot and Tool side port default settings.

2.1.3 Network Settings

The Master module network settings are only loaded upon power up. Consequently the module must be power cycled for new network setting changes to be used. The default settings are as follows:

- IP Address is set to **192.168.001.05**4.
- Manual IP address Last Octet Set by DIP Switches is **enabled** (The default DIP switch settings are set to 192.168.001.054, refer to *Section 2.1.7—DIP Switches on the Master Module*).
- The subnet mask is set to: **255.255.0.0**
- The Gateway is set to: **0.0.0.0**.
- DHCP is **Disabled**

There are four ways to set the modules network configurations:

1. *Section 2.1.3.1—Using the Module Defaults for the Network Settings*
2. *Section 2.1.3.2—Using the Communication Setting Page to configure the Modules Network Settings*
3. *Section 2.1.3.3—Using the DIP Switches to Configure the IP Address and Communication Settings Page for Other Module Network Settings*
4. *Section 2.1.3.4—Using a DHCP Server to Configure the Modules Network Settings*

2.1.3.1 Using the Module Defaults for the Network Settings

To configure the network settings to the module defaults manually set DIP switch 9 to **ON**. Refer to *Section 3.5—Master Module IP address DIP Switch Configuration*. This will disregard the IP address manually set from the module DIP switches 1-8 and any values entered into the Communication Setting Setup page. The network setting will be set to the module defaults listed in *Section 2.1.3—Network Settings* after power up. The values entered into the Communication Setting page will remain but the module will use the default network settings.

2.1.3.2 Using the Communication Setting Page to configure the Modules Network Settings

To configure the network settings using the values entered from the Communication Setting Setup page manually set DIP switch 9 to **OFF**. Refer to *Section 3.5—Master Module IP address DIP Switch Configuration*. This will disregard the IP address manually set from the module DIP switches 1-8) and use the values entered into the Communication Setting Setup page. On the Communication page click **Edit** on the bottom of the page; This allows you to edit the network settings.

Select the following setting from the Communication settings page:

- IP Address will change to **value entered** after power up.
- Manual IP address Last Octet Set by DIP Switches must be set to **Disabled** after power up (The DIP switch settings will be ignored).
- The Subnet Mask will change to **value entered** after power up.
- The Default Gateway will change to **value entered** after power up.
- DHCP must be set to **Disabled** after power up.
- Click **Apply** at the bottom of the Communication Setting page.
- Power up the module.

2.1.3.3 Using the DIP Switches to Configure the IP Address and Communication Settings Page for Other Module Network Settings

To configure the network settings using the values entered from the Communication Setting Setup page and the IP address from the DIP switches, manually set DIP 1 through 8 to the desired values and set switch 9 to **OFF**. Refer to *Section 3.5—Master Module IP address DIP Switch Configuration*. This will use the IP address manually set from the module DIP switches 1-8 and use the values entered into the Communication Setting Setup page for the Subnet Mask and Default Gateway. On the Communication page click **Edit** on the bottom of the page: This allows you to edit the network settings.

NOTICE: If the DIP switches evaluate to an octet of 0 (DIP switches 1–8 all off) or 255 (DIP switches 1–8 all on), the last octet will be set to 1, in order to avoid using an illegal network address.

Select the following setting from the Communication settings page:

- IP Address: (The entered value form the communication page will be ignored and the value from the DIP switch setting on the module will be used).
- Manual IP address Last Octet Set by DIP Switches: must be set to **Enabled** (The IP address will be derived manually from the DIP Switch settings).
- The Subnet Mask will change to **value entered** after power up.
- The Default Gateway will change to **value entered** after power up.
- DHCP must be set to **Disabled** after power up.
- Click **Apply** at the bottom of the Communication Setting page.
- Power up the module.

2.1.3.4 Using a DHCP Server to Configure the Modules Network Settings

To configure the module to use values for the IP Address, Subnet Mask, and Default Gateway from the DHCP server, manually set DIP switch 9 to **OFF**. Refer to *Section 3.5—Master Module IP address DIP Switch Configuration*. On the Communication page click **Edit** on the bottom of the page: This allows you to edit the network settings.

Select the following setting from the Communication settings page:

- DHCP: must be set to **Enabled**
- Click **Apply** at the bottom of the Communication Setting page.
- Power up the module.

A DHCP server must be present in the network. If no DHCP server is responding within 30 seconds after power-up, the Master module will use the network setting entered on the communication setting setup page.

2.1.4 Switch Module Settings (Ethernet Switch)

The modules have an integrated managed Ethernet switch where the settings of 2 ports can be changed from the Communication Settings Setup page under Switch Module Settings. The modules are shipped with the following default switch settings. (refer to *Section 2.1.4.1—Robot Side Port* and *Section 2.1.4.2—Tool Side Port*) The default settings support Ethernet/IP Quick Connect.

The Ethernet switch resets to these known default settings by setting DIP switch 9 to the ON position and performing a power cycle. This will reset the module to the default but will not change the values entered in the Communication setting page.

NOTICE: In order to support a standard (not Quick Connect) Ethernet/IP application Auto Negotiation and Auto Crossover must be enabled on the Robot and the Tool Side Port. Otherwise there can be communication errors.

2.1.4.1 Robot Side Port

Robot Side Port default settings:

- Robot Side Port Auto-Negotiation: **Enabled**
- Robot Side Port Manual Speed Setting: **100MPS**
- Robot Side Port Manual Duplex Setting: **Full Duplex**
- Robot Side Port Auto-MDIX : **Enabled** (Auto-MDIX = Auto Crossover)
- Robot Side Port Manual MDIX Setting: **MDI**

2.1.4.2 Tool Side Port

Tool Side Port default settings:

- Tool Side Port Auto-Negotiation: **Disabled**
- Tool Side Port Manual Speed Setting: **100MPS**
- Tool Side Port Manual Duplex setting: **Full Duplex**
- Tool Side Port Auto-MDIX: **Disabled**
- Tool Side Port Manual MDIX Setting: **MDI-X** (MDI-X = Crossover)

2.1.5 Communication Diagnostics (Ethernet Switch)

On the Communication Diagnostics page of the web server (see *Figure 2.2*), the Master module displays the current status of the robot and tool side port settings, as well as their diagnostic counters. This is the same information is reported over the Ethernet Link Object 0xF6 in the Ethernet/IP protocol.

Figure 2.2—Integrated Web Server Diagnostics Page

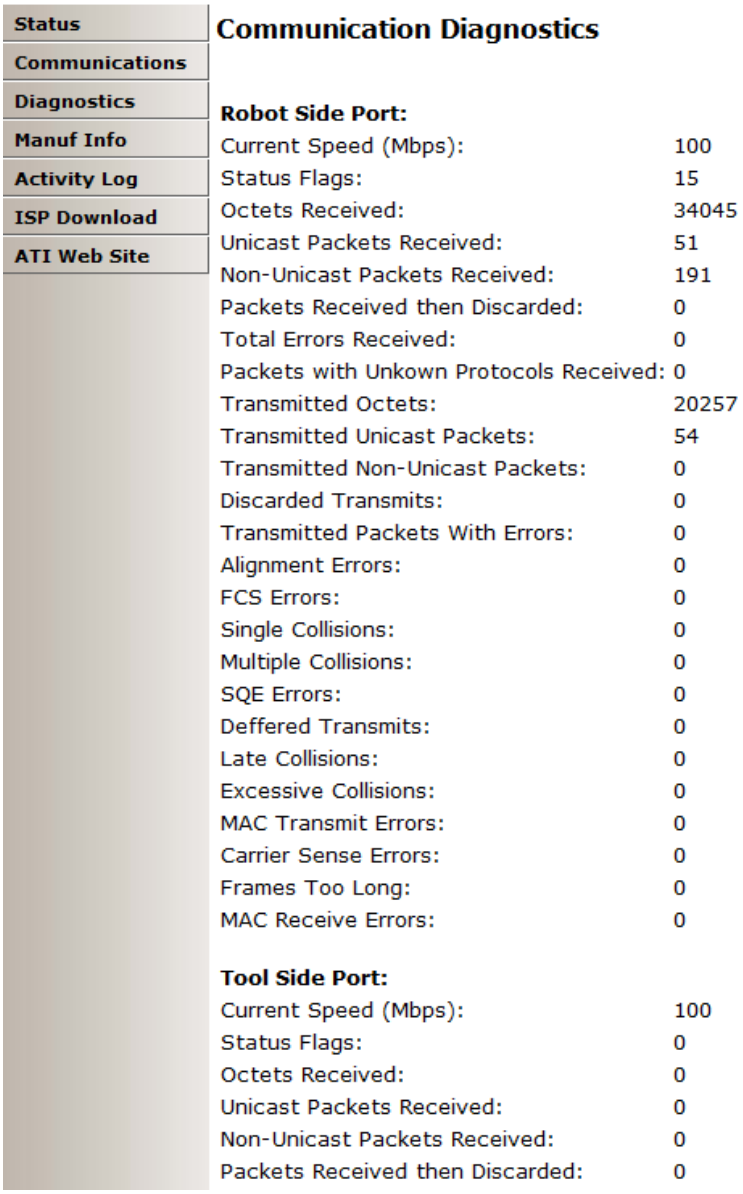

2.1.6 Internal Diagnostics

On the bottom of the diagnostics page there is a link for Internal Diagnostics reports all the available counters from the microcontroller's Ethernet interface.

Figure 2.3—Integrated Web Server Internal Diagnostics Page

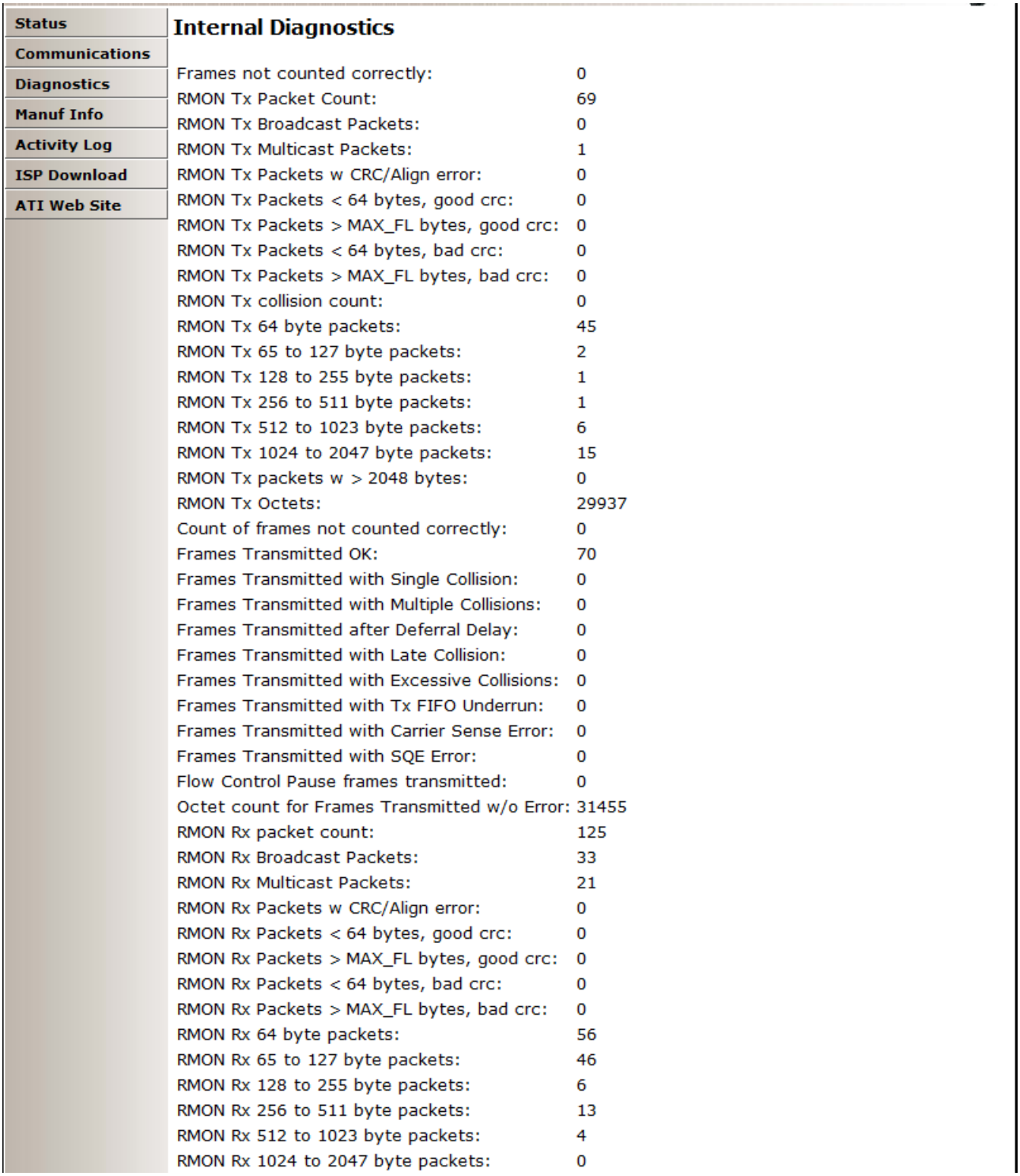

2.1.7 DIP Switches on the Master Module

The DKS-M module has 10 DIP switches with the following functions:

DIP 1 through 8:	Last octet of the DKSs IP address. See *Section 2.1.3—Network Settings* for details
DIP 9:	Set DKS Master module's IP address settings to the default values.
DIP 10:	Must always be in the OFF position.

Figure 2.4—Ethernet/IP Master Module DIP Switch Settings

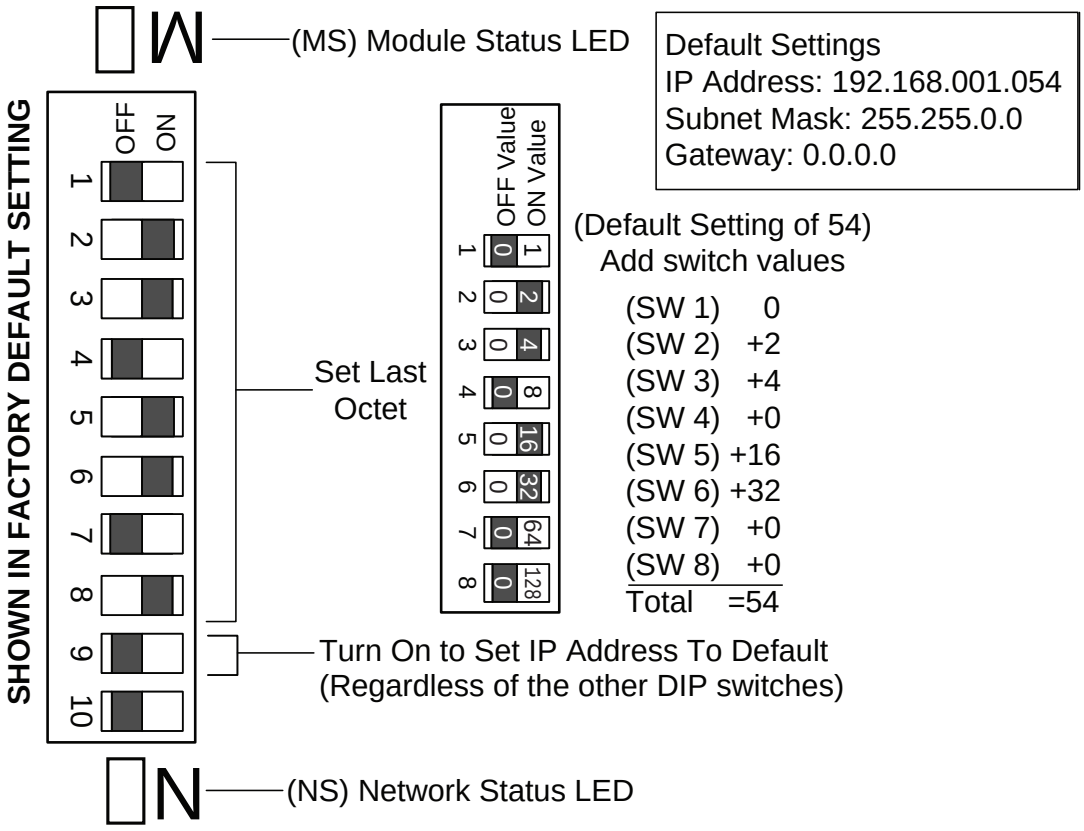

2.1.8 Module and Network Status LED

The module status LED is identified on the module as **MS**. It provides device status for power and proper operation. Refer to *Table 2.2* for an outline of this LED's operation. The network status LED is identified on the module as **NS**. It provides network status for power and communication. Refer to *Table 2.3* for an outline of this LED's operation.

Figure 2.5—Ethernet/IP Master Module LEDs and DIP Switch Settings

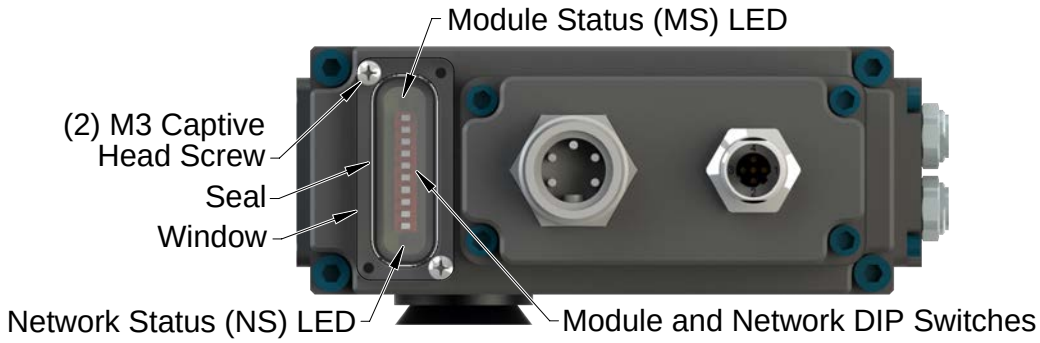

Table 2.2—Module Status LED		
Status	**LED Function**	**Note**
No Power	Off	No power applied. Check voltage is 24 VDC.
Operational	Green	Normal operation.
Standby	Flashing Green	No Tool module attached. Tool-ID in bitmap not available. Configuration missing, incomplete or incorrect.
Recoverable Fault	Flashing Red	Fault that can be corrected during operation.
Unrecoverable Fault	Red	Fault that cannot be corrected during operation.

Table 2.3—Network Status LED		
Status	**LED Function**	**Note**
No Power/ Off Line/No IP Address	Off	Device not online. Device may not have an IP address or may be powered off.
On Line, Not Connected.	Flashing Green	Device is online but connection is not established. Device not allocated to a Master.
OK On line, Connected	Green	Device is online with connections established. Device is allocated to a Master.
Connection Timeout	Flashing Red	One or more I/Os are timed out.

2.1.9 Using Ethernet Quick-Connect

The PLC (Programmable Logic Controller) can communicate with downstream nodes, after electrical contact is established between the Master and Tool.

The "Tool Electrical Lock" signal for Ethernet/IP Quick Connect indicates that all electrical connections to the tool-side devices are made and power is supplied. This signal comes from the Tool Changer. The module reports "Tool Electrical Lock" in the bitmap (Byte 4, Bit 7 - refer to *Section 2.5—Software*).

In *Figure 2.6* actions shown in red are the typical application actions but may vary and are outside the scope of the manual. Refer to section E-3 of the ODVA Ethernet/IP specification (Edition 1.14) for specific requirements and actions of the controller.

Figure 2.6—Quick Connect Sequence Diagram

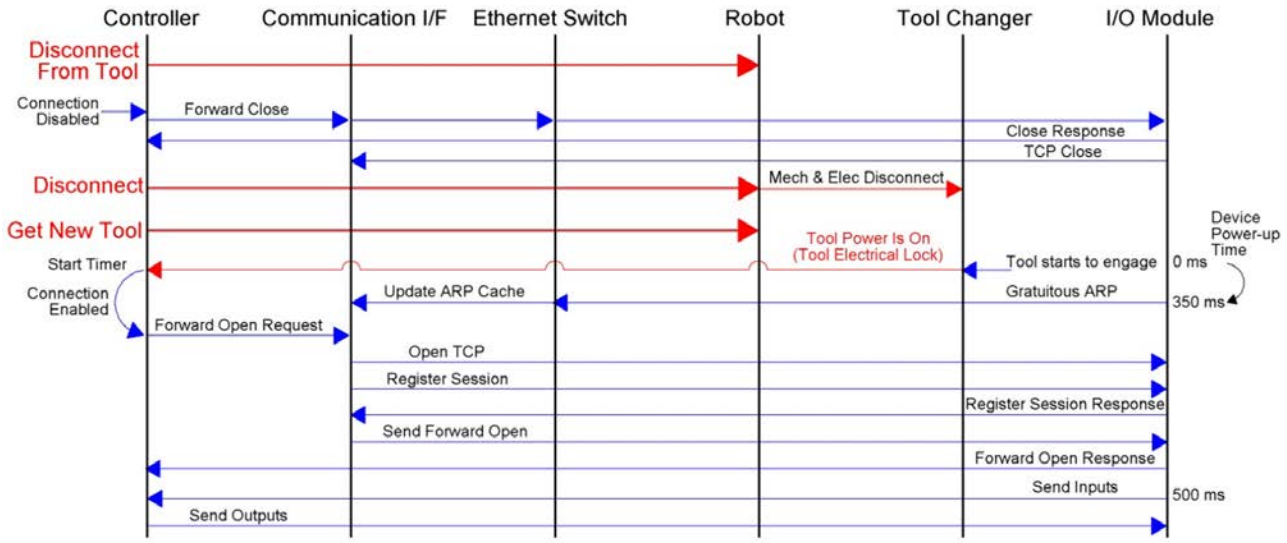

2.2 Arc Prevention Circuit

The DKS-M module incorporates ATI's Arc Prevention Circuit, which extends the life of all electrical power contacts by eliminating arcing caused by inductive loads and high inrush current during coupling/uncoupling. The Arc Prevention Circuit makes it possible to couple/uncouple without switching power off and prevents damage to the contacts.

In the DKS-M module, the Arc Prevention Circuit controls the ON/OFF status of the Logic and Tooling Power V+.

2.2.1 Arc Prevention Circuit Behavior during Coupling

Figure 2.7 shows the power-on timing diagram for the Arc Prevention Circuit.

- Electrical contact between Master and Tool pin contacts occurs.
- The LATCH command is issued, which locks the Master and Tool.
- The Arc Prevention Circuit turns on Logic and Tooling Power.
- After contact, power is available to the EOAT in less than 100ms (t_1).

The Arc Prevention Circuit only allows power to pass to the Tool after the LATCH command has been issued and the Master and Tool module's electrical contacts are fully engaged. The Tool Power Is On (Byte 4, Bit 7 - refer to *Section 2.5—Software*) indicates when this is the case.

Figure 2.7— Arc Prevention Circuit Power-On Timing

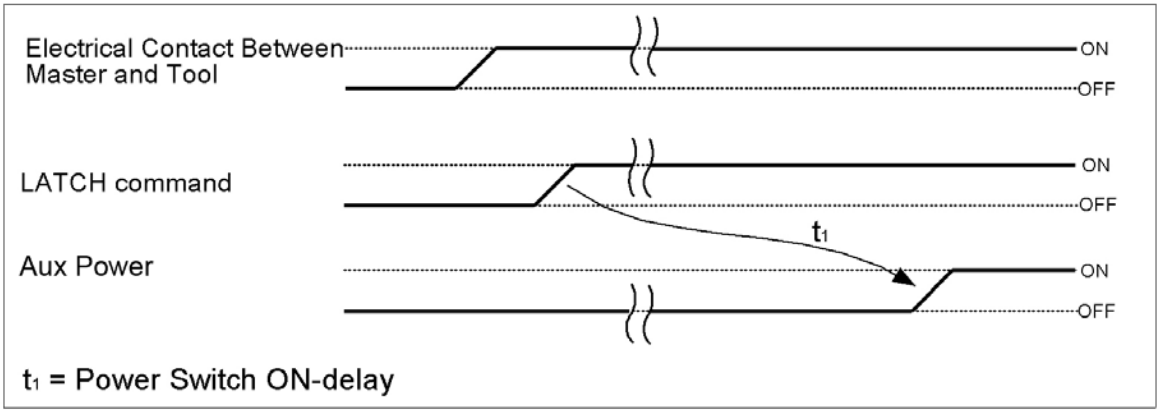

2.2.2 Arc Prevention Circuit Behavior during Uncoupling

Figure 2.8 which shows the power-off timing diagram for the Arc Prevention Circuit.

- The UNLATCH command is issued, which unlocks the Master and Tool.
- The Arc Prevention Circuit turns off auxiliary power.
- The Arc Prevention circuit turns off the Tooling power with a delay of less than 50 ms (t_2).
- Separation of the Master and Tool electrical contacts is delayed (t_3) after the UNLATCH command is issued. Many factors affect the delay (t_3) including the weight of the EOAT, the friction between Master and Tool alignment pins, etc. but is usually not shorter than 100 ms.

Figure 2.8—Arc Prevention Circuit Power-Off Timing

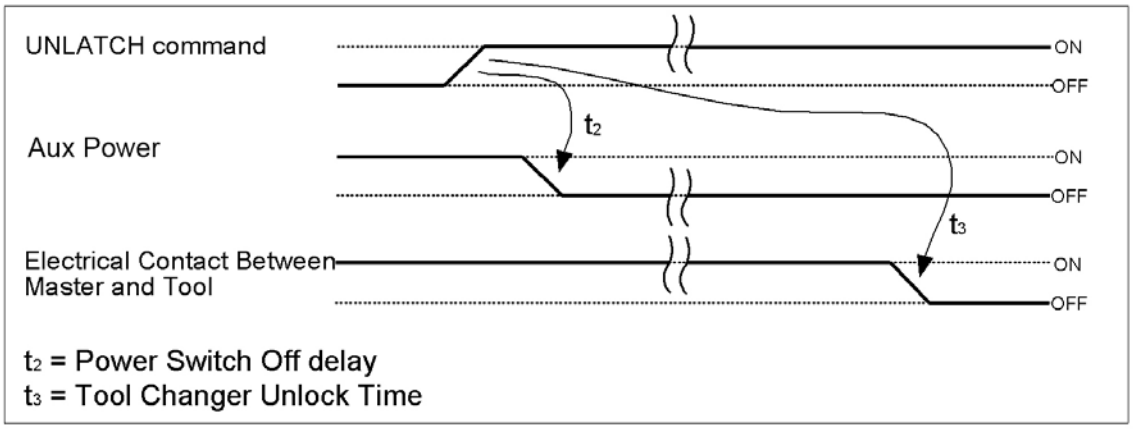

2.3 Tool Module

In addition to providing Tool-ID and Tool side TSI, the Tool module also functions as a pass through for Ethernet/IP and Auxiliary Power signals to downstream equipment. For more details refer to *Section 9—Drawings.*

2.3.1 Tool-ID Switches

A push-button switch is provided on the Tool module for setting the Tool-ID number. There are ten possible Tool-ID values from 0-9.

NOTICE: When there is no Tool mated to the Master, the Tool Present bit will become low and each Tool-ID bit will be assigned a value of 1, which translates to a Tool-ID of 15. Since a Tool-ID of 15 is impossible, (there are only 0–9 digits on the thumbwheel switch) one could use this as an added indication that the Tool is not present.

The Tool module utilizes a patented, rapid communication method to report the Tool-ID information from the push-button switch to the Master module as soon as the Tool Changer is coupled. Typically the Tool-ID information is available to the Master within 150ms from the time the changer is coupled. To set the Tool-ID refer to *Section 3.8—Setting the Tool-ID.*

Figure 2.9—Tool-ID Switch Settings

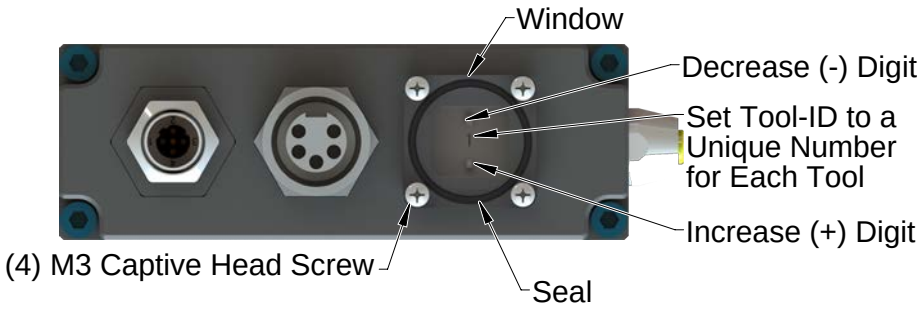

2.4 Tool Side TSI

The tool stand Interlock (TSI) circuit ONLY allows Tool release while in the stand or storage location as indicated by actuation of a customer-integrated switch. The customer must integrate a single throw, double pole (normally open, spring return) limit switch to work with this feature (reference *Figure 2.10*). The limit switch should be mounted to the end effector in such a way that the switch is made only when the Tool is in the stand or storage location.

There is both a firmware and a hardware interrupt for the Unlatch command.

- **Unlatch is enabled** is reported in the bitmap in the form of the “Unlatch Enabled” bit (refer to *Section 2.5—Software*).
- The UNLATCH signal is routed through the TSI switch and thus cannot be completed without the TSI switch circuit being closed.

If the Tool Changer is given the UNLATCH command, the TSRV input must be ON or the Tool Changer will not unlatch. The TSRV input is driven by the TSI switch when it is made in the tool stand.

The following TSI status signals are reported in the bitmap (refer to *Section 2.5—Software*):

- TSIV (TSI Limit Switch Verify): Status of second contact of the limit switch that is located on the Tool.
- TSRV (TSI Relay Verify): Status of the TSI relay in the Tool module.

Section 4.2—Recommended Sequence of Operation describes in detail the behavior of the TSIV and TSRV bits during the operation of the Tool Changer.

Figure 2.10—Tool Stand Interlock (TSI)

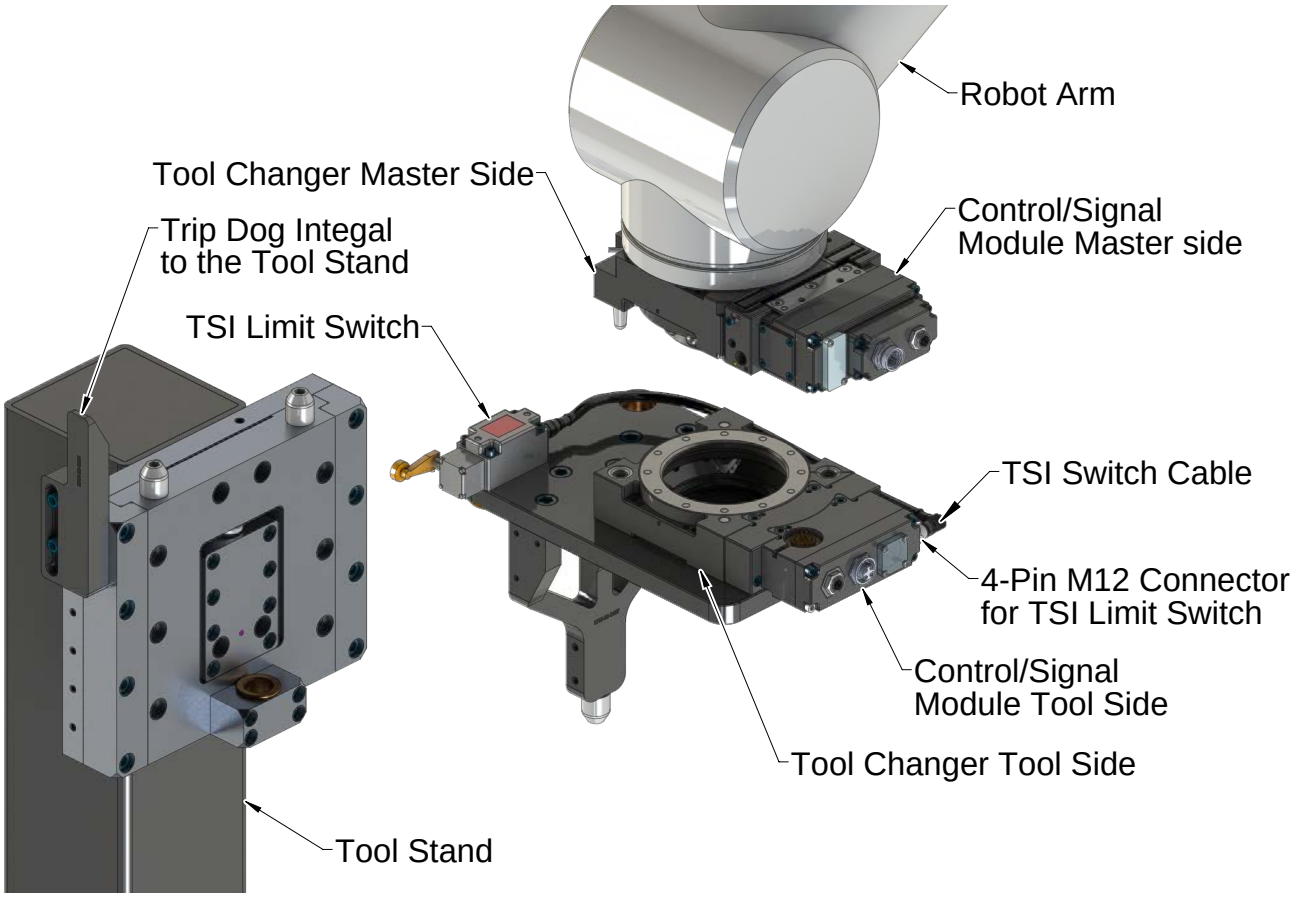

2.4.1 TSI Behavior for Module

The DKS modules rely on the status of the Tool Present Signal and the TSIV input to determine when it is appropriate to unlatch the Tool. The Tool Present signal indicates if the Master and Tool are coupled while the TSIV input indicates when the TSI mechanical switch on the Tool is actuated, thereby indicating that the Tool is in the stand.

There is both a firmware and fasteners interrupt for the Unlatch command. Firmware compares the Tool Present signal with the TSIV input and enables the Unlatch command only if it meets the conditions in *Table 2.4*.

Table 2.4—UNLATCH Enable Logic and Truth Table

Tool Present	TSIV	UNLATCH Enabled	Status of Master Body
0	0	1	No Tool, positioned in free air
1	0	0	Tool is present, positioned in free air
1	1	1	Tool is present, positioned in tool stand

For example, if the DKS-M module receives an UNLATCH command and the Tool Present signal indicates that Master and Tool are coupled, but the TSIV indicates that the Tool is not in the tool stand then the UNLATCH command is ignored.

2.5 Software

The EDS file for the Master node is available from the ATI website (*www.ati-ia.com/download/edsfiles*) or by e-mail. Reference the following Part Number:

DKS-M Node EDS File 9031-20-1058

An I/O bitmap for the Master node is provided in the following table. The default setting for the Master module is IP Address 192.168.001.054.

Table 2.5—I/O Bitmap, Robot Inputs from ATI Master, (9121-DKS-M), Ethernet Default IP Address 192.168.001.054

Byte	BitNumber	Name	Description/Function
1	0	Locked	Tool Changer Locked Proximity Sensor Input
	1	Unlocked	Tool Changer Unlocked Proximity Sensor Input
	2	Input and Logic Power Good	Input and Logic Power Present Input
	3	Valve Power Available	Valve Power Present Input
	4	RTL1	Ready-to-Lock 1 Proximity Sensor Input
	5	RTL2	Ready-to-Lock 2 Proximity Sensor Input
	6	-	(Reserved)
	7	-	(Reserved)
2	0	Tool-ID 1	Tool-ID
	1	Tool-ID 2	Tool-ID
	2	Tool-ID 4	Tool-ID
	3	Tool-ID 8	Tool-ID
	4	TSIV	TSI Limit Switch Verify
	5	TSRV	TSI Relay Verify
	6	Unlatch Enabled	Unlatched Enabled Status Information
	7	Tool Present	Hard-Connect Tool Present Input
3	0	-	(Reserved)
	1	-	(Reserved)
	2	Error on Latch Output	Latch output overloaded
	3	Error on Unlatch Output	Unlatch output overloaded
	4	-	(Reserved)
	5	-	(Reserved)
	6	-	(Reserved)
	7	-	(Reserved)
4	0	-	(Reserved)
	1	-	(Reserved)
	2	-	(Reserved)
	3	-	(Reserved)
	4	-	(Reserved)
	5	-	(Reserved)
	6	COMM OK	Indicates Ethernet/IP Connectivity is Established
	7	Tool Power Is ON	Indicates that Arc Prevention Circuit is turned ON and power is provided to the Tool

Table 2.5—I/O Bitmap, Robot Inputs from ATI Master, (9121-DKS-M), Ethernet Default IP Address 192.168.001.054			
Byte	**BitNumber**	**Name**	**Description/Function**
5-8	0	-	(Reserved)
	1	-	(Reserved)
	2	-	(Reserved)
	3	-	(Reserved)
	4	-	(Reserved)
	5	-	(Reserved)
	6	-	(Reserved)
	7	-	(Reserved)

Table 2.6—I/O Bitmap, Robot Outputs to 9121-DKS-M module, Ethernet Default IP Address 192.168.001.054			
Byte	**BitNumber**	**Name**	**Description/Function**
1	0	Latch (Lock)	Latch Solenoid Valve Output
	1	Unlatch (Unlock)	Unlatch Solenoid Valve Output
	2	-	(Reserved)
	3	Clear Errors	Reset errors, allow affected I/O to be reactivated
	4	-	(Reserved)
	5	-	(Reserved)
	6	-	(Reserved)
	7	-	(Reserved)
2 to 8	(Reserved)		

3. Installation

Installation and removal are outlined in the following section. For wiring information refer to *Section 9—Drawings*.

WARNING: Do not perform maintenance or repair(s) on the Tool Changer or modules unless the Tool is safely supported or placed in the tool stand, all energized circuits (for example: electrical, air, water, etc.) are turned off, pressurized connections are purged and power is discharged from circuits in accordance with the customer specific safety practices and policies. Injury or equipment damage can occur with the Tool not placed and energized circuits on. Place the Tool in the tool stand, turn off and discharge all energized circuits, purge all pressurized connections, and verify all circuits are de-energized before performing maintenance or repair(s) on the Tool Changer or modules.

CAUTION: Thread locker applied to fasteners must not be used more than once. Fasteners might become loose and cause equipment damage. Always apply new thread locker when reusing fasteners.

3.1 Master Module Installation

Tools required: *5 mm hex key, torque wrench*

Supplies required: *clean rag, Loctite® 242*

1. If the Tool Changer is already installed, place the Tool side of the Tool Changer safely in the tool stand and uncouple the Tool Changer to allow clear access to the Master and Tool plates of the Tool Changer.
2. It may be necessary to clean the mounting surface on the valve adapter prior to installing the module in order to remove any debris that may be present.
3. Using the ledge feature, place the module into the appropriate location on the valve adapter. Align the module with the valve adapter using the dowels in the bottom of the ledge feature. Refer to *Figure 3.1*.
4. If fasteners do not have pre-applied adhesive, apply Loctite 242 to the supplied M6 socket head cap screws. Install the (2) M6 socket head cap screws securing the module to the valve adapter and tighten to 70 in-lbs (7.9 Nm).
5. Set the DIP switches. Refer to *Section 2.1.3—Network Settings* and *Section 3.5—Master Module IP address DIP Switch Configuration*.
6. Connect the (L) Lock, (U) Unlock, and (R1 and R2) RTL sensor cable connectors to the module.
7. Connect the customer interface, auxiliary power and Ethernet cables to the module. Ensure that the connectors are cleaned prior to being secured as appropriate.
8. If installation is complete, the module may be put into normal operation.

Figure 3.1—DKS-M Module Installation

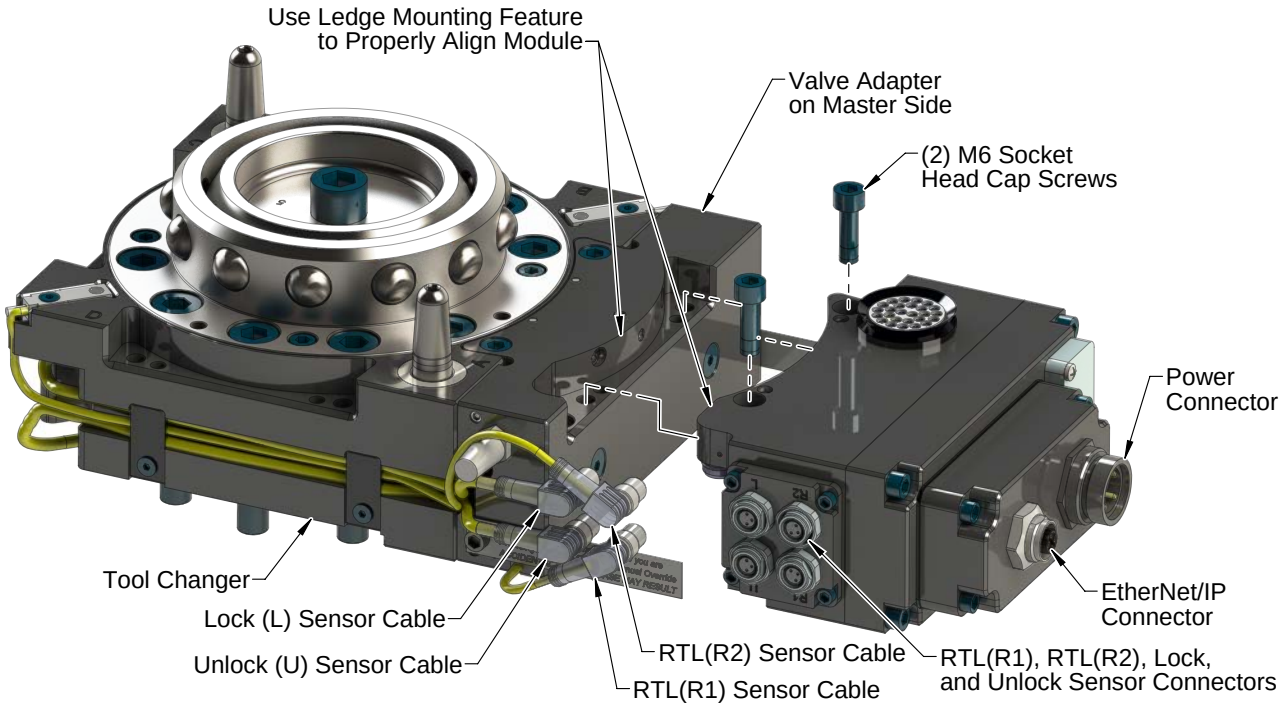

3.2 Master Module Removal

Tools required: *5 mm hex key, torque wrench*

1. If the Tool Changer is already installed, place the Tool side of the Tool Changer safely in the tool stand and uncouple the Tool Changer to allow clear access to the Master and Tool plates of the Tool Changer.
2. Turn off and de-energize all energized circuits (for example: electrical, pnuematic, hydraulic).
3. Disconnect the (L) Lock, (U) Unlock, and (R1 and R2) RTL sensor cable connectors from the module.
4. Disconnect the auxiliary power and Ethernet cables from the module.
5. Support the control/signal module, remove the (2) M6 socket head cap screws, and lower the module until it clears the guide pin.

3.3 Tool Module Installation

Tools required: *5 mm hex key*

Supplies required: *clean rag, Loctite 242*

1. If the Tool Changer is already installed, place the Tool side of the Tool Changer safely in the tool stand and uncouple the Tool Changer to allow clear access to the Master and Tool plates of the Tool Changer.
2. It may be necessary to clean the mounting surface on the valve adapter spacer prior to installing the module in order to remove any debris that may be present.
3. Using the ledge feature, place the module into the appropriate location on the valve adapter spacer. Align the module with the valve adapter spacer using the dowels in the bottom of the ledge feature.
4. If fasteners do not have pre-applied adhesive, apply Loctite 242 to the supplied M6 socket head cap screws. Install the (2) M6 socket head cap screws securing the module to the valve adapter spacer and tighten to 70 in-lbs (7.9 Nm).
5. Connect the power cable and Ethernet/IP cable connectors to the module.
6. Set the Tool-ID. Refer to *Section 3.8—Setting the Tool-ID.*
7. If installation is complete, the module may be put into normal operation.

Figure 3.2—DKS-T Module Installation

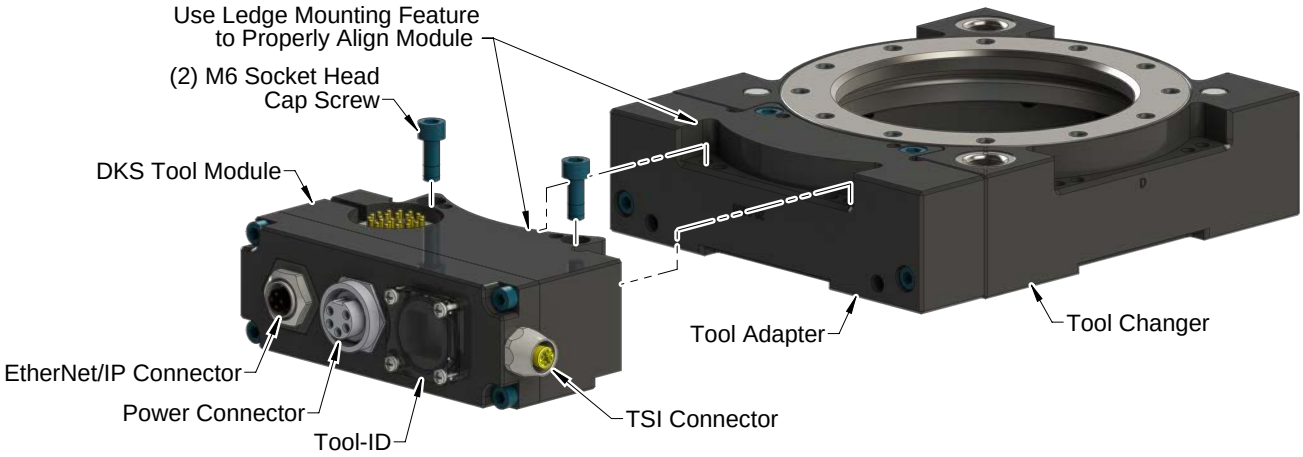

3.4 Tool Module Removal

Tools required: *5 mm hex key*

1. If the Tool Changer is already installed, place the Tool side of the Tool Changer safely in the tool stand and uncouple the Tool Changer to allow clear access to the Master and Tool plates of the Tool Changer.
2. Turn off and de-energize all energized circuits (for example: electrical, pnuematic, hydraulic).
3. Disconnect the auxiliary power and Ethernet cables from the module.
4. Support the module and remove the (2) M6 socket head cap screws and lift up on the module until it clears the guide pin.

3.5 Master Module IP address DIP Switch Configuration

The IP address DIP switches may need to be set depending on network configuration desired. Refer to *Section 2.1.3—Network Settings* for more details.

Tools required: *Phillips screwdriver*

1. Loosen (4) M3 pan head captive screws and remove the window.
2. Set the DIP switches.

NOTICE: After adjustment is completed, ensure that the seal and window are re-positioned correctly to prevent a leakage path to inside the module.

3. Re-install the window and tighten the (4) M3 pan head captive screws.

Figure 3.1—Set the IP Address DIP Switches

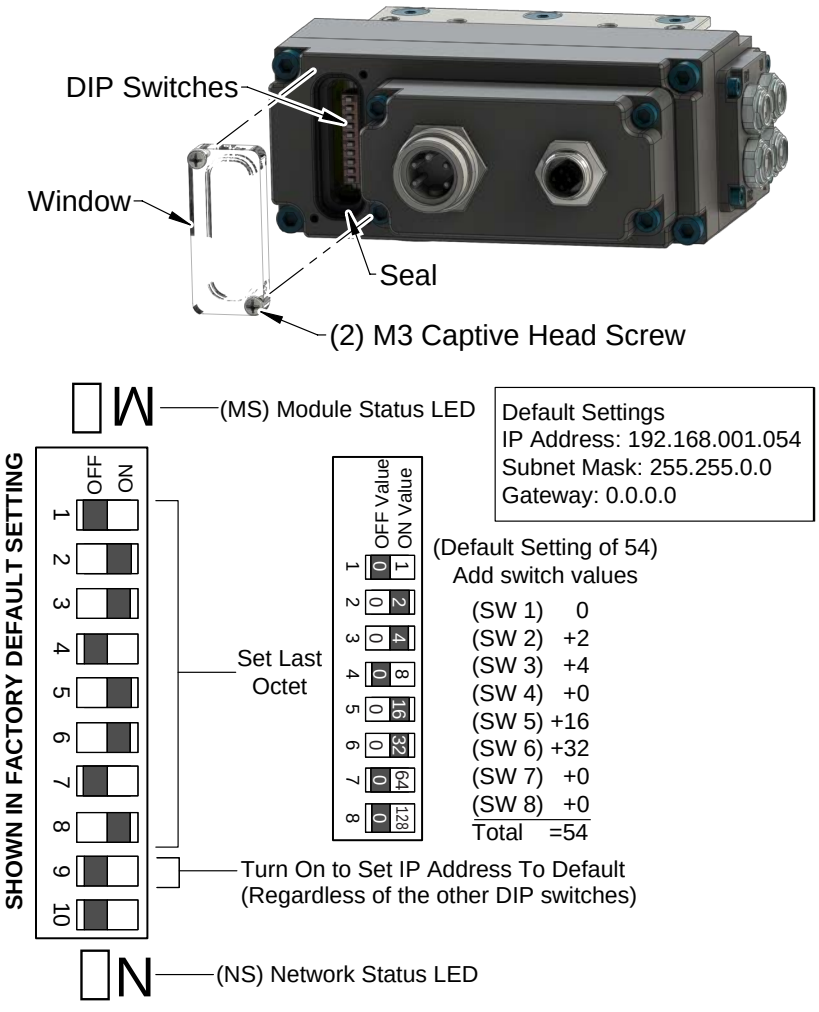

3.6 Ethernet/IP Configuration

Several parameters for the Ethernet/IP modules need to be configured prior to operating the Tool Changer. Refer to *Section 2—Product Information* of this manual for detailed information on installation and operation of the Ethernet/IP modules.



CAUTION: Ethernet cabling layout is critical to the overall performance of the system. Interface connections from the controller up the robot arm to the ATI Master should be minimized (less than 3 connections, e.g.). Use of hi-flex, robot rated cable is essential for long term performance.



CAUTION: Connect Earth Ground only at the power supply. Additional connections (e.g. inside of the robot arm) will cause ground loops and can lead to excessive noise on the power supply. This can result in (FCS) frame checking sequence and alignment errors in Ethernet data packets.

3.7 Utility Schematic

Refer to *Section 9—Drawings* for customer interface and wiring details for the DKS modules.

3.8 Setting the Tool-ID

Tools required: *Phillips screwdriver*

Use the push button switches on the Tool Module to set a Tool-ID number (0-9).

1. Loosen (4) M3 pan head captive screws and remove Tool-ID window.

Figure 3.1—Set Tool-ID

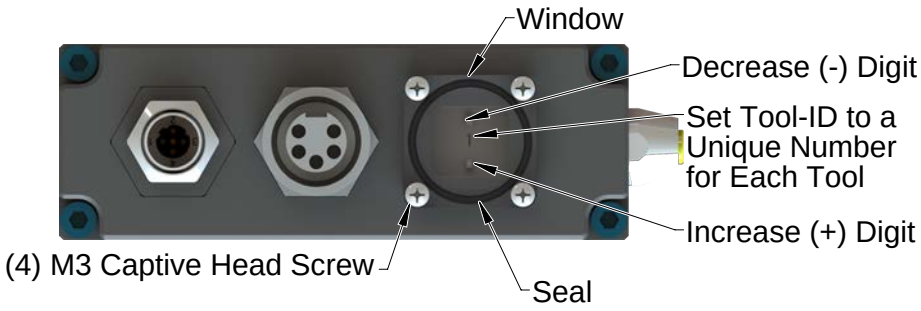

2. Use a non-conductive tool (e.g., plastic stylus) to press on the Tool-ID push buttons to increase (+) or decrease (-) the digit value. Set the Tool-ID to the desired unique digit number. Refer to *Section 9—Drawings* for Tool-ID output tables.

NOTICE: After adjustment is completed, ensure that the seal and window are re-positioned correctly to prevent a leakage path to inside the module.

3. Re-install the Tool-ID window and tighten the (4) M3 pan head captive screws.

4. Operation

The control/signal module controls the Tool Changer and passes electrical power, signals, and field bus data to the customer end-of-arm tooling. The DKS works with specific industrial servo motors and drives, to provide a separable joint in the power and signal wiring. To maximize the service life of these components, the following points should be observed:

DANGER: This module has a voltage of 50V or greater; always remove power before contacting the module. Arcing and damage occur if power is not removed from the module during maintenance or service. Always remove power before attaching or disconnecting cables, separating or inserting the mating couplers, or making any contact with the Tool Changer or Utility Coupler.

CAUTION: Improper cable routing can result in wires and cables being pinched in the joint between the Tool Changer plates and premature failure of the electrical connectors. Properly route and secure all cables, particularly on the Master side.

The following sections detail the functional characteristics of the module.

NOTICE: The 0 and 24 VDC supply lines are required to be on certain pin locations of the customer interface connector. Refer to *Section 9—Drawings* for pin out information and location of the I/O signals.

Refer to the specific Tool Changer manual for coupling conditions of the Tool Changer and *Section 4.2—Recommended Sequence of Operation*. When coupled, the module Tool can be communicated with, Tool-ID can be read (if equipped), and attached end-effectors can be used.

4.1 Lock, Unlock, and RTL Sensor Cable LED Behavior

The Lock, Unlock, and RTL sensor cables are equipped with two LEDs. The Green LED indicates the sensor has power and the yellow LED indicates the switch has been made. The LED behavior is affected by the control/signal module.

Table 4.1—Sensor Cable LED Behavior for Common Tool Changer Positions

Tool Changer Position	Sensor cable LED Behavior			
Unlocked (Tool Changer Master plate free of stand with no Tool plate attached)	RTL (R1) Sensor	ON OFF	ON ON	Unlock (U) Sensor
	RTL (R2) Sensor	ON OFF	ON OFF	Lock (L) Sensor
Ready to Lock (Tool Changer Master plate with Tool plate parallel and at a distance of 1.22 mm or less from each other)	RTL (R1) Sensor	ON ON	ON ON	Unlock (U) Sensor
	RTL (R2) Sensor	ON ON	ON OFF	Lock (L) Sensor
Locked (Tool Changer Master plate with Tool plate attached in fully locked position)	RTL (R1) Sensor	ON ON	ON OFF	Unlock (U) Sensor
	RTL (R2) Sensor	ON ON	ON ON	Lock (L) Sensor
Missed Tool (Tool Changer Master plate locked with no Tool plate attached)	RTL (R1) Sensor	ON OFF	ON OFF	Unlock (U) Sensor
	RTL (R2) Sensor	ON OFF	ON OFF	Lock (L) Sensor

Figure 4.1—Lock, Unlock, and RTL Sensor cable LED Behavior (Shown in Locked Position)

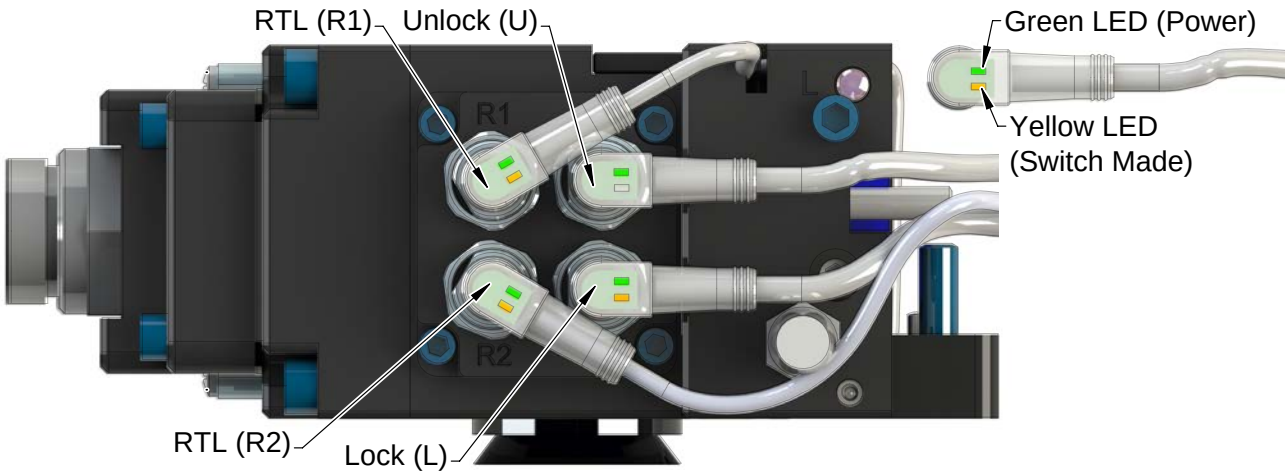

(Control module shown for reference only)

4.2 Recommended Sequence of Operation

This procedure is to be used as a general guide when programming a robot or PLC for use with a Tool Changer and DKS control/signal modules. This procedure is intended for "automatic" modes used during normal application processes.

1. **Start**→ The robot and Tool Changer Master are free of the stand or storage location, the Tool Changer is uncoupled and the Tool Changer locking mechanism is fully retracted (unlocked condition). The Tool is by itself in the tool stand. No error or fault conditions exist.

   a. The **RTL** inputs (RTL1 & RTL2) are OFF.
   b. The ATI Tool and any downstream device are offline.
   c. The **Input and Logic Power Good** is ON. The Valve Power Available input is ON provided the Switched AUX power supply is ON.
   d. The **Tool Power is On** is OFF.
   e. The **Unlocked** input is ON, indicating that the Tool Changer locking mechanism is fully retracted.
   f. The **TSIV** input is OFF.

NOTICE: In the event that the Tool Changer is locked without a Tool, it must be unlocked using the manual override button on the valve, refer to *Section 6.1.1—Solenoid Valve Manual Override Procedure.*

2. Robot and Master move into the tool, are parallel and within 0.15" of the tool (i.e., the module contact pins are touching but the **RTL** sensors have not yet sensed the targets on the tool).

   a. The **Tool Present** and **TSIV** inputs are ON, indicating that the Master and Tool are in close proximity of each other and verifying the operation of the TSI limit switch.
   b. When the **Tool Present** input is ON, **Tool-ID** becomes available within 50 ms.
   c. Power is not yet available on the Tool. The bit **"Tool Power is On"** is OFF.

3. Robot and Master move into the tool, are parallel and within 0.06" of the Tool

   a. The **RTL** sensors are ON, indicating that its ok to couple Tool.

4. Couple the Tool Changer.

   a. The **Unlatch** output is OFF and the **Latch** output is made ON.
   b. With the **Latch** output is ON, Power becomes available on the Tool and the bit **"Tool Power is ON"** turns on.
   c. The **Unlocked** input goes OFF a short time later, indicating piston travel. Subsequently, the **Locked** input goes ON and remains ON, indicating that the coupling operation is complete.
   d. Sometime thereafter, communications should be established with the downstream Ethernet device(s) (The time it takes to establish connection with a downstream Ethernet/IP node depends on the power up and reconnect time of the individual Ethernet/IP equipment that is installed on the tool.)

5. Robot moves away from the tool stand with the Tool Changer coupled.

   a. The **TSI Limit Switch** becomes deactivated, and the **TSIV** input turns OFF.
   b. The **Unlatch Enabled** becomes OFF.

6. Normal operation

   a. The following inputs are ON:
      i. Locked
      ii. Input and Logic Power Good
      iii. Valve Power Available
      iv. RTL (RTL1 & RTL2)
      v. Tool Present
      vi. Tool Power is On

   b. The following inputs are OFF:
      i. Unlocked
      ii. TSIV
      iii. Unlatch Enabled

   c. The following outputs is ON:
      i. Latch

   d. The following outputs is OFF:
      i. Unlatch

7. Robot moves into the tool stand with the Tool Changer coupled.

   a. When the tool is returned to the stand, the **TSI Limit Switch** is activated and the **TSIV** input turns ON.

   b. The **Unlatch Enabled** is ON, indicating that it is safe to uncouple the Tool Changer.

8. Uncouple the Tool Changer.

   a. The **Latch** output is OFF and the **Unlatch** output is ON.

   b. The **Tool Power is On** bit is OFF and power on the Tool is off.

   c. Communication is lost with downstream device(s).

   d. The **Locked** input is OFF a short time later and subsequently the **Unlocked** input goes ON, indicating that the uncoupling operation is complete.

9. Robot and Master move away from the tool, are parallel at a distance greater than 0.15” from the tool.

   a. The **Tool Present** and **TSIV** inputs are OFF.

   b. The **Tool-ID** becomes unavailable (all 1 → 0xF).

10. Robot and Master are in Free space

    a. The following inputs are ON:
       i. Unlocked
       ii. Input and Logic Power Good
       iii. Valve Power Available
       iv. Unlatch Enabled

    b. The following inputs are OFF:
       i. Locked
       ii. RTL (RTL1 & RTL2)
       iii. TSIV
       iv. Tool Present

5. Maintenance

The modules are not designed to be field serviced as all point-to-point wiring connections are soldered. Component replacement is limited to the V-ring seal on the Master.



WARNING: Do not perform maintenance or repair(s) on the Tool Changer or modules unless the Tool is safely supported or placed in the tool stand, all energized circuits (for example: electrical, air, water, etc.) are turned off, pressurized connections are purged and power is discharged from circuits in accordance with the customer specific safety practices and policies. Injury or equipment damage can occur with the Tool not placed and energized circuits on. Place the Tool in the tool stand, turn off and discharge all energized circuits, purge all pressurized connections, and verify all circuits are de-energized before performing maintenance or repair(s) on the Tool Changer or modules.

If the Tool Changer is used in dirty environments (for example: welding or deburring applications), limit the exposure of the Tool Changer. Idle Tool assemblies should be covered to prevent debris from settling on the mating surface. Also, the Master assembly should be exposed for only a short period of time during Tool change and down time.

Under normal conditions, no special maintenance is necessary; however, perform periodic inspections to assess for unexpected damage and assure long-lasting performance. Perform the following visual inspection monthly:

- Inspect mounting fasteners to verify they are tight and if loose, then tighten to the proper torque. Refer to *Section 3—Installation.*
- Cable connections should be inspected during maintenance periods to ensure they are secure. Loose connections should be cleaned and re-tightened. Inspect cable sheathing for damage and repair or replace damaged cabling. Loose connections or damaged cabling are not expected and may indicate improper routing and/or strain relieving.
- Inspect the Master and Tool pin blocks for any pin damage, debris, or darkened pins. Refer to *Section 5.1—Pin Block Inspection and Cleaning.*
- Inspect V-Ring seals for wear, abrasion, and cuts. If worn or damaged, replace. Refer to *Section 6.3.1—V-ring Seal Replacement*

5.1 Pin Block Inspection and Cleaning

Tools required: *Nylon Brush (ATI part number 3690-0000064-60)*

1. Place the Tool in a secure location.
2. Uncouple the Master and Tool plates.
3. Turn off and de-energize all energized circuits (for example: electrical, pneumatic, and hydraulic circuits).
4. Inspect the Master and Tool pin blocks for debris or darkened pins.

Figure 5.1—Inspect Master and Tool Pin Blocks



5. If debris or darkened pins are present, use a vacuum to remove the debris, and clean using a nylon brush (ATI part number 3690-0000064-60).

NOTICE: Do not use an abrasive media and/or cleaners or solvents to clean the contact pins. Using abrasive media and/or cleaners or solvents will cause damage to the contact surface or cause pins to stick. Clean contact surfaces with a vacuum or non-abrasive media such as a nylon brush (ATI part number 3690-0000064-60).

Figure 5.2—Clean Pin Blocks with a Nylon Brush



6. Inspect the Master and Tool pin blocks for stuck pins or pin block damage.

Figure 5.3—Stuck Pin and Pin Block Damage



7. If pins become stuck or if there is damage to the pin block, contact ATI for either a possible pin replacement procedure or module replacement.
8. Safely resume normal operation.

6. Troubleshooting and Service Procedures

The following section provides troubleshooting information to help diagnose conditions with the Tool Changer and service procedures to help resolve these conditions.

WARNING: Do not perform maintenance or repair(s) on the Tool Changer or modules unless the Tool is safely supported or placed in the tool stand, all energized circuits (for example: electrical, air, water, etc.) are turned off, pressurized connections are purged and power is discharged from circuits in accordance with the customer specific safety practices and policies. Injury or equipment damage can occur with the Tool not placed and energized circuits on. Place the Tool in the tool stand, turn off and discharge all energized circuits, purge all pressurized connections, and verify all circuits are de-energized before performing maintenance or repair(s) on the Tool Changer or modules.

6.1 Troubleshooting Procedures

Troubleshooting information is provided in the following table.

Table 6.1—Troubleshooting

Symptom	Possible Cause	Correction
Unit will not lock or unlock	Debris caught between the Master and Tool plates.	Clean debris from between Master and Tool plates. Verify mounting fasteners is secure and does not protrude above the mating surfaces.
	Ball bearings are not moving freely.	Verify the ball bearings are moving freely. Clean and lubricate as needed. Refer to the Maintenance section of the Tool Changer manual for instructions.
	Air supply not to specifications.	Check air supply. Refer to the Installation section of the Tool Changer manual for specifications.
	Valve adapter exhaust muffler clogged.	The valve adapter exhaust muffler may be clogged. Refer to the valve adapter manual for more information.
	TSI switch not functioning properly.	Verify the TSI switch is functioning and properly adjusted.
	Input power outside limits.	Verify the input power is within limits (Unlatch Solenoid Energized bit is HIGH).
	Unlocked bit	Verify the Unlocked bit is HIGH.
	Signals are mapped incorrectly.	Verify signals are mapped and are communicating properly. Refer to *Section 9—Drawings* for electrical schematic.
	Master and Tool are within the specified No-Touch zone.	Verify the Master and Tool are within the specified No-Touch zone when attempting to lock. Refer to the Installation – tool stand Design Section of the Tool Change manual for specifications.
	Solenoid valve not functioning.	The valve adapter exhaust muffler may be clogged. Refer to the valve adapter manual for more information.

Table 6.1—Troubleshooting		
Symptom	**Possible Cause**	**Correction**
Sensors not operating properly (but Ethernet/ IP is operating correctly).	Tool plate is not secured properly or debris is trapped between surfaces.	Ensure that the Tool plate is securely held to the Master plate, that nothing is trapped between their surfaces.
	Valve adapter exhaust muffler clogged.	The valve adapter exhaust muffler may be clogged. Refer to the valve adapter manual for more information.
	Sensor cables damage or incorrectly connected.	Verify the cables are connected correctly and not damaged, replace if damaged. Refer to the Troubleshooting Section of the Tool Changer manual.
	Sensors are not set correctly or not functioning.	Verify the sensors are set correctly and functioning. Refer to the Troubleshooting Section of the Tool Changer manual.
Loss of Communication	Damaged signal cabling	Check/Replace signal cabling up- and down-stream of Tool Changer modules.
	Worn or damaged contact pins	Inspect module contact pins for debris/wear/damage.
	Product upstream and downstream of Tool Changer failed or damaged	Check product upstream and downstream of Tool Changer for failure. This failure can “appear” to be caused by the Tool Changer or affect Tool Changer performance.
No Power on the Tool-side	Latch command not issued	Verify the Latch command has been issued by the robot.
	Tool Power is On bit	Verify the **Tool Power is On** bit is ON.
	Tool Present bit	Verify the **Tool Present** bit is **HIGH**.
Tool Changer is locked without Tool	Tool Changer was locked without Tool.	Unlock Tool Changer Manually refer to *Section 6.1.1—Solenoid Valve Manual Override Procedure.*

6.1.1 Solenoid Valve Manual Override Procedure

The manual override procedure should be used when the Tool Changer is locked without the Tool plate attached. The control module safety circuit does not allow the Tool Changer to be unlatched without the Tool plate attached and the tool in the tool stand.

WARNING: Do not use the solenoid valve manual override if the tool is locked to the Master. Using the manual override will release the Tool and may cause bodily injury or damage to equipment. If the Tool is attached to the Master, it must be secured in the tool stand or in a location where the tool weight is supported before using the manual override.

CAUTION: The manual override is not intended for normal operations. Manual override is to be used in situations where no alternative is available to unlock the Master. Do not execute the Latch command unless the Master and the Tool are ready to be coupled.

Tools required: *3 mm hex key, 2 mm ball end hex key*

1. Using a 3 mm hex key, remove the M4 socket head cap screws, warning label, and nylon washer from the Unlock side of the solenoid valve. The Unlock side is marked with a “U”.

CAUTION: Applying excess force can damage the solenoid or cause the override button to stick in one position. Actuation of valve override buttons requires about 1 mm of travel and minimal of force. Use a non-sharp object, similar to ball nose 2 mm hex key, to gently depress the override button; an air release should be heard when the solenoid is activated.

2. Insert a 2 mm ball end hex key in the unlock valve screw hole and gently depress the valve override button. An air release should be heard when the solenoid is actuated. Make sure the locking mechanism is fully retracted.
3. Using a 3 mm hex key, replace the M4 socket head cap screws, warning label, and nylon washer and tighten the screw.

Figure 6.1—Manual Override

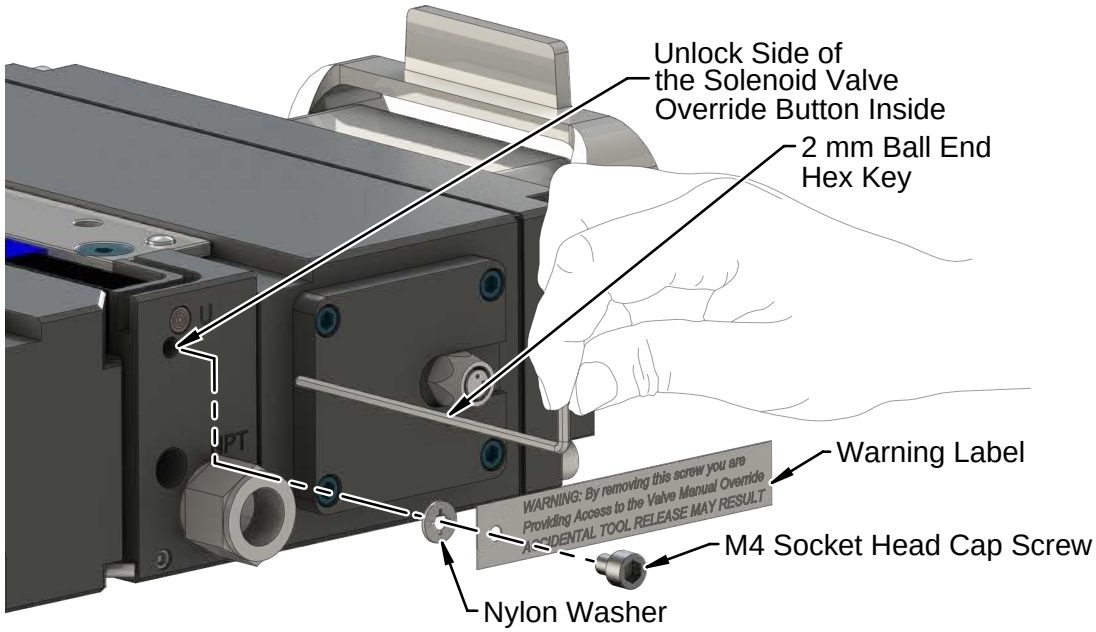

6.2 Diagnostic Functions and Error Handling

There are several diagnostic functions that can have an effect on the input bitmap and influence the Tool Changer control.

6.2.1 Power Status

The DKS module continuously monitors the voltage of its interface and sensor power supply. If the voltage is between 11 V and 25 V the “Input and Logic Power Good” bit will be high. If the voltage falls outside of this range the “Input and Logic Power Good” bit will be low and will remain low until the voltage is between 11 V and 25 V and the Clear Errors output has been set from low to high.

NOTICE: The Tool Changer will not Unlatch while the “Input and Logic Power Good” bit is low.

6.2.2 Valve Power Status

The DKS module continuously monitors the voltage of the Ouput power which is used to supply the lock and unlock solenoid valves of the Tool Changer. If the voltage stays above 21 V the “Valve Power Available” bit will be set high. If the voltage falls below the 21 V threshold the bit will be set low. It will become high again as soon as the voltage rises above 21 V.

6.2.3 Error on Latch or Unlatch Output

The valve control outputs of the DKS module are protected against overload conditions, such as those created by a short circuit. During an overload condition the LATCH and/or UNLATCH output is turned off and the corresponding error bit “Error on Latch Output” or “Error on Unlatch Output” is turned on. The output cannot be set high again until the overload condition is removed and the “Clear Errors” bit is set from low to high.

6.2.4 “COMM OK” bit

The “COMM OK” is set high as soon as Ethernet/IP communication is established.

6.2.5 “Tool Power is On” bit

The “Tool Power is ON” bit is set high when the Arc Prevention Circuit has activated power on the Tool-side. If this bit is low, there will be no power available on the Tool.

6.2.6 “Unlatch Enabled” bit

The “Unlatch Enabled” bit is set high when the DKS module determines that the necessary preconditions for unlatching the Tool have been met. (for example: Tool is in the tool stand) A Tool can only be released if the “Unlatch Enabled” bit is high. Refer to *Section 2.4—Tool Side TSI.*

6.3 Service Procedures

Component replacement and adjustment procedures are provided in the following section.

6.3.1 V-ring Seal Replacement

Parts required: *Refer to Section 9—Drawings*

The seal protects the electrical connection between the Master and Tool module. Replace the seal if it becomes worn or damaged.

1. Place the Tool in a secure location.
2. Uncouple the Master and Tool plates.
3. Turn off and de-energize all energized circuits (for example: electrical, pneumatic, and hydraulic circuits).
4. To remove the existing seal, pinch the edge of the seal and pull the seal away from the pin block on the Master module.
5. To install a new seal, stretch the new seal over the shoulder of the pin block.
6. Push the seal hub down against the pin block.
7. Safely resume normal operation.

Figure 6.2—V-ring Seal Replacement

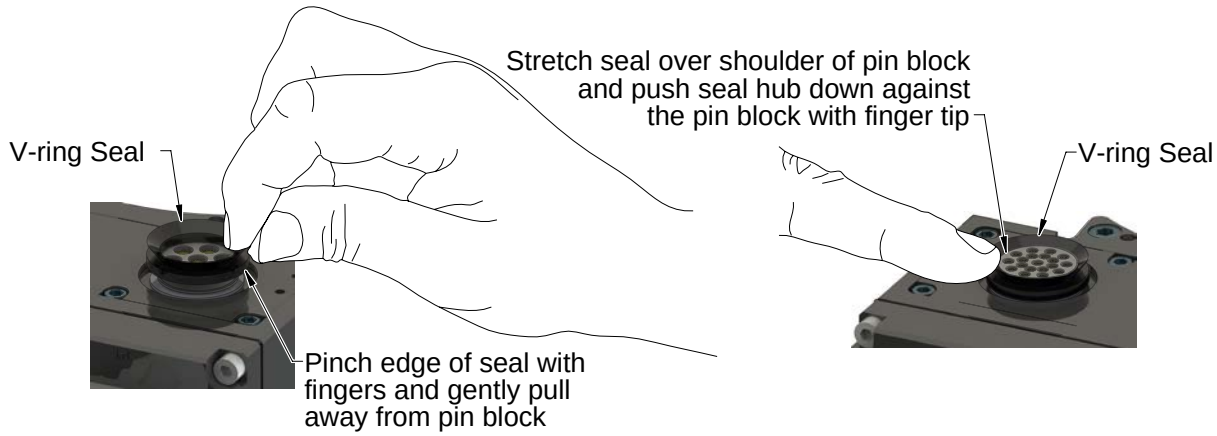

7. Serviceable Parts

Refer to *Section 9—Drawings.*

Table 7.1—Master module Mounting Fasteners	
Part Number	**Description**
3500-1066020-21A	M6 x 20 Socket Head Cap Screw, SS, ND Microspheres, 0-3 uncoated lead thds. 5-7 coated thds. IFI525

Table 7.2—Tool module Mounting Fasteners	
Part Number	**Description**
3500-1066016-21A	M6 x 16 Socket Head Cap Screw, DIN 912 A4 S/S (316) ND Ind. Microspheres Epoxy, Yellow. 0-3 uncoated lead thds. 5-7 coated thds.

Table 7.3—Accessories	
Part Number	**Description**
3690-0000064-60	Brush, Blue Nylon All Purpose (Contact Pin Cleaning)

8. Specifications

Table 8.1—DKS Master Module Specifications	
9121-DKS-M	DKS Ethernet/IP Control Master module assembly
Factory Default Configuration	I/P Address: 192.168.001.054 Subnet Mask: 255.255.255.0 Gateway: 0.0.0.0 **Note:** The DKS-M DKS-T modules conform to the Ethernet/IP Adaptation of CIP Specification, Edition 1.12; © 2011, ODVA The DHCP option is factory set to “disabled”
Connector(s)	Logic and Input power: 5-pin Mini, male Ethernet: 4-pin M12 D-coded, female Integrated Tool Changer I/O: (4) M8, 3-pin female connectors supporting Tool Changer Locked, Unlocked, and Ready-to-Lock proximity sensors. Integrated Connection to valve adapter: 3-pin Pin Block supporting Latch and Unlatch signals
Pass through Signals	5 A, 24 VDC maximum
Current Draw	Power: 180 mA @ 24 VDC, Master only (Unlocked sensor “ON”, Locked) Valve Power (switched Auxiliary Power): 250 mA @ 24 VDC (Solenoid Valve) (only when locking or unlocking Tool Changer).
Temperature	32°F to 120°F (0 to 49°C).
Weight	2.1 lbs (0.95 kg)

Table 8.2—DKS Tool Module Specifications	
9121-DKS-T	DKS Ethernet Control Tool module assembly
Factory Default Configuration	A Independent Tool-ID switch, reading a (0–9) position (all factory set to Tool Position 1)
Connector(s)	Auxiliary Power: 5-pin Mini, female Ethernet: 4-pin M12 D-coded, female Connection to TSI Switch: 4-pin M12, female connector supporting connection to Limit Safety Switch
Pass through Signals	5 A, 24 VDC maximum
Tool-ID	A Push button switch reading 0–9 positions (Refer to I/O map).
Temperature	32°F to 120°F (0 to 49°C).
Weight	1.4 lbs (0.64 kg)

9. Drawings

9.1 DKS-M DKS-T

Drawings are available on the *ATI website* or by contacting an ATI representative.