Table of Contents

Glossary **C-4**

C. Control and Signal Modules **C-6**

DL10—PROFINET® Control/Signal Module **C-6**

1. Product Overview **C-6**

1.1 DL10 Master Module **C-6**

1.2 DL10 Tool Module **C-7**

1.3 DL15 Tool Module **C-7**

2. Product Information **C-8**

2.1 Master Module **C-8**

2.1.1 PROFINET Interface Information C-8

2.1.2 System Failure (SF) and Bus Failure (BF) LEDs C-11

2.1.3 Ethernet 1 and Ethernet 2 LEDs C-12

2.1.4 Integrated Ethernet Switch C-12

2.1.5 Reset-To-Factory Push-Button C-13

2.2 Arc Prevention Circuit **C-13**

2.2.1 Arc Prevention Circuit Behavior during Coupling C-14

2.2.2 Arc Prevention Circuit Behavior during Coupling C-14

2.2.3 Arc Prevention Circuit Behavior during Uncoupling C-15

2.3 Tool Module **C-16**

2.3.1 Tool-ID C-16

2.4 Tool Side TSI **C-17**

2.5 TSI Operational Function **C-19**

2.5.1 The Master is Free of the Stand and the Tool is in the Stand C-19

2.5.1.1 RTL Bypass Relay Circuit C-19

2.5.2 The Master is Coupled with the Tool and the Tool is in the Stand C-20

2.5.3 The Master is Coupled with the Tool and the Tool is Free of the Stand C-21

2.5.4 TSI Behavior C-22

3. Installation C-23
3.1 Master Control/Signal Module Installation C-23
3.2 Master Control/Signal Module Removal C-24
3.3 Tool Control/Signal Module Installation C-24
3.4 Tool Control/Signal Module Removal C-25
3.5 Setting the Tool-ID C-26
3.6 PROFINET Interface C-26
3.7 Utility Schematic C-26
3.8 Electrical Connections C-26
4. Operation C-27
4.1 Lock, Unlock, and RTL Sensor Cable LED Behavior C-28
4.2 Inputs C-29
4.2.1 Locked C-29
4.2.2 Unlocked C-29
4.2.3 Input/Logic Power Good C-29
4.2.4 Output Power Available C-29
4.2.5 RTL1 and RTL2 ..... C-29
4.2.6 Tool Present C-29
4.2.7 Tool Power Is On C-29
4.2.8 Unlatch Enabled C-29
4.2.9 TSIV C-29
4.2.10 TSRV C-29
4.2.11 RTLV1 and RTLV2 ..... C-29
4.3 Error Conditions C-30
4.3.1 ERROR ON LATCH C-30
4.3.2 ERROR ON UNLATCH C-30
4.3.3 UNSAFE UNLATCH C-30
4.3.4 RTL/RTLV Mismatch C-30
4.3.5 TSIV/TSRV Mismatch C-30
4.3.6 Lock/Unlock Sensor Fault C-30
4.3.7 COMM Error C-30
4.4 Recommended Sequence of Operation C-32
5. Maintenance C-39
5.1 Pin Block Inspection and Cleaning C-40

6. Troubleshooting and Service Procedures C-41
6.1 Troubleshooting C-41
6.2 Service Procedures C-42
6.2.1 Seal Replacement C-42
6.2.2 DL10 Device Replacement Procedures C-43
6.2.2.1 Master Module Replacement Procedures C-43
6.2.2.2 Replace a Master Module with an Already Commissioned Master Module C-43
7. Serviceable Parts C-46
7.1 Master Module Serviceable Parts C-46
7.2 Tool Module Serviceable Parts C-46
7.3 Accessories C-46
8. Specifications C-47
9. Drawings C-49

Glossary

Term	Definition
BF LED	BUS Failure (BF) LED.
Clear Errors	An output supplied to the ATI Master node to clear all applicable error conditions
CL-RPC	Connection Less Remote Procedure Call.
COMM Error	Tool-ID communication timeout.
DCP	PROFINET Discovery and Configuration Protocol.
EOAT	End Of Arm Tool (end effector).
Error on Latch Output	An input indicating a short circuit overload condition exists with the Latch Output.
Error on Unlatch Output	An input indicating a short circuit overload condition exists with the Unlatch Output.
Ethernet Switch	An Ethernet network component connecting multiple communication partners with each other.
FE	Functional Earth
GSDML File	A special kind of XML-based Device Description File used by PROFINET to automatically obtain the device characteristics.
Input/Logic Power Good	An input indicating the presence of US1 power at the ATI Master.
Latch	The output supplied to the ATI Master module to couple the Tool Changer.
LLDP	Link Layer Discovery Protocol
Lock/Unlock Sensor Fault	An input indicating that the Locked and Unlocked inputs are ON at the same time.
Locked	A proximity sensor input indicating that the coupling mechanism is in the Locked position.The “LOCKED” bit in the PROFINET bitmap will only be set high if the following conditions are on: • LOCKED sensor input is high • UNLOCKED sensor input is low • TOOL PRESENT input is high
Output Power Available	An input indicating the presence of US2 Power at the ATI Master.
PROFINET	A communication system for Industrial Ethernet designed and developed by PROFIBUS International. It uses some mechanisms similar to those of the PROFIBUS field bus
RTL (Ready To Lock)	A proximity sensor input that senses when the ATI Tool is in close proximity.
RTL Relay	A relay circuit present on the ATI Master module that is driven by the RTL sensor and allows the Tool Changer locking mechanism to retract when there is no Tool present.
RTLV	An input provided for health status monitoring of the RTL Relay.
Spare	An O/P bit.
SF LED	System Failure LED; this is a standard status LED, similar to the DeviceNet Module Status LED; it has a red part and a green part.
SNMP	Simple Network Management Protocol
Tool Power is On	The “Tool Power is ON” bit is set high when the Arc Prevention Circuit has activated power on the tool side. If this bit is low there will be neither Input/Logic Power nor Output power available on the tool.
Tool Present	A hard connect input (sourced from the Tool) indicating the Master and Tool are electrically connected to each other.
Tool-ID	An input from the Master node reporting the values from the Tool-ID switch on the Tool module.
TSI	The Tool Stand Interlock feature is a custom ATI safety solution and circuit designed to only allow the Tool Changer to release while in the stand or storage location.
TSI Relay	A relay circuit present on the ATI Tool module that is driven by a tool stand limit switch in order to close the TSI circuit and allow the Tool Changer to release.

Term	Definition
TSIV	An input supported for monitoring of a tool stand limit switch used within the TSI circuit.
TSRV	An input provided for the health status monitoring of the TSI Relay.
Unlatch	The output supplied to the ATI Master module to uncouple the Tool Changer.
Unlatch Enable	Indicates it is safe to proceed with an unlatch request.
Unlocked	A proximity sensor input indicating that the coupling mechanism is in the Unlocked position. The “UNLOCKED” bit in the PROFINET bitmap will only be set high if the following conditions are on: • UNLOCKED sensor input is high • LOCKED sensor input is low.
Unsafe Unlatch	An input indicating that an Unlatch command was received which would result in an unsafe tool release and was therefore not processed.

C. Control and Signal Modules

DL10—PROFINET® Control/Signal Module

1. Product Overview

The modules enable the customer to control and communicate with the Tool Changer through a PROFINET network. A PROFINET node is established on the Master only. Control of the Tool Changer is achieved through the Master node along with the reporting of the various Tool Changer I/O. The Tool module supports Tool-ID and functions as a pass-through for PROFINET network and power to the customer tooling.

A 3-pin spring signal contact block is provided on the Master module for support of integrated single or double solenoid valves. The integrated valve is supplied from ATI as part of the valve adapter block (9121-Jxx). Refer to the valve adapter block manual for more information (9620-20-C-Jxx Air and Valve Adapters with Valve Signal Pass Through). Electrical connector details are provided in drawings in *Section 9—Drawings*.

Because the Master module requires the use of a valve adapter, the Tool module must have a spacer module so that the Master and Tool modules are aligned when coupled.

In addition to supporting the standard Tool Changer input signals (Locked, Unlocked, and Ready to Lock proximity sensors) the modules also support advanced diagnostic and fault reporting. Refer to *Section 4.3—Error Conditions.*

Compliant spring pins are provided on the Master and fixed contact pins on the Tool. To avoid unintentional human contact, the Master spring pins are recessed below an insulated surface on both the power and signal circuits. When the modules are coupled, the V-ring seal forms a water resistant but not waterproof seal around the pin block.

The Unlock signal to the integrated solenoid valve is routed through a “Tool Stand Interlock” (TSI) safety circuit that prevents the robot from unlocking the Tool from the Master, when the Tool is not in the tool stand. Refer to *Section 2.4—Tool Side TSI* for additional information regarding TSI.

1.1 DL10 Master Module

The module has the following connections:

- (1) 4-pin male M12 D-coded PROFINET connector.
- (1) 5-pin male auxiliary power connector.
- (4) 3-pin female M8 connectors for RTL1, RTL2, Lock, and Unlock sensor connections.
- (1) M5 x 0.8 threaded hole for FE ground terminal connection that is accessed by removing the M5 set screw plug.
- (1) 3-pin internal valve connection

The Master module also incorporates ATI’s exclusive Arc Prevention Circuit which extends the life of all electrical power contacts by eliminating arcing caused by inductive loads and high inrush current during coupling/uncoupling. Refer to *Section 2.2—Arc Prevention Circuit* for additional information regarding the Arc Prevention Circuit.

The module provides status LED’s to visually indicate its operation. A reset button provides the ability to return to factory default settings. Refer to *Section 2.1.2—System Failure (SF) and Bus Failure (BF) LEDs* and *Section 2.1.3—Ethernet 1 and Ethernet 2 LEDs*.

PROFINET requires a FE ground, the Master module provides a M5 x 0.8 FE ground terminal that is passes FE ground to the Tool Module through the 7-Pin contact block.

Figure 1.1—DL10 Modules

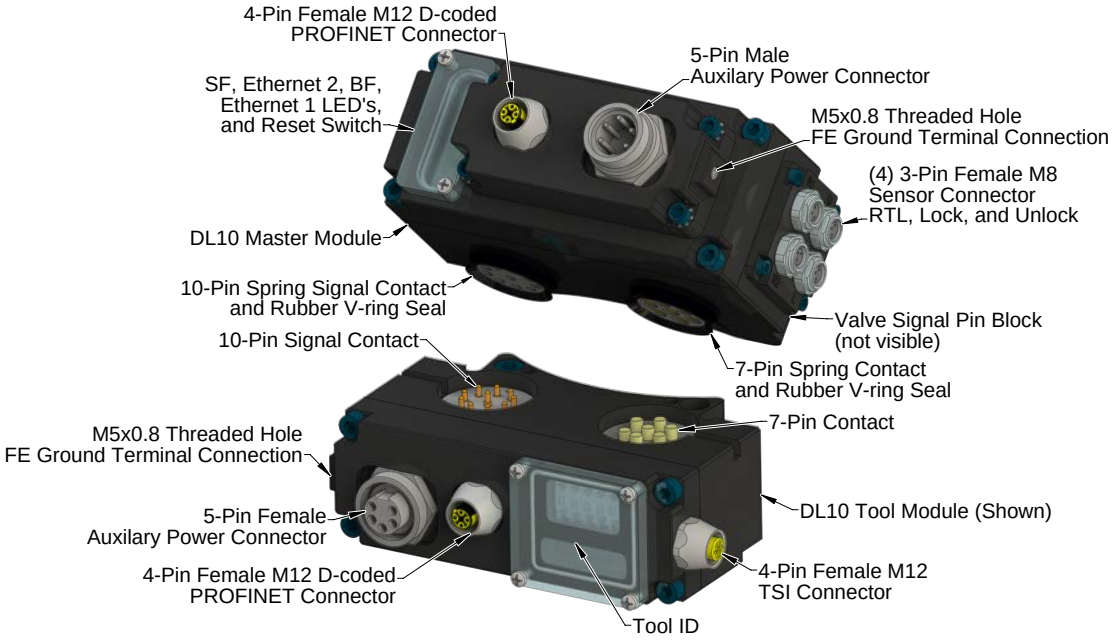

1.2 DL10 Tool Module

The module has the following connections:

- (1) 4-pin female M12 D-coded PROFINET connector.
- (1) 5-pin male auxiliary power connector.
- (1) 4-pin female M12 TSI connector.
- (1) M5 x 0.8 threaded hole for FE ground terminal connection that is accessed by removing the M5 set screw plug.

The TSI connector supports the use of a mechanical limit switch that has (2) sets of N.O. contacts (double-pole, single throw).

The Tool module employs a series of (5) push button switches for setting of the Tool-ID input that allows the customer to distinguish between the different tools that are used in a robotic cell or on a production line. The Tool-ID is reported through the Master module bitmap. PROFINET requires a FE ground, the Tool module provides a M5 x 0.8 FE ground terminal that is passes FE ground to the customer tooling. See *Section 2.1.1—PROFINET Interface Information* for PROFINET bitmap and detailed I/O information.

1.3 DL15 Tool Module

The module has the following connections:

- (1) 4-pin female M12 D-coded PROFINET connector.
- (1) 5-pin male auxiliary power connector.
- (1) 4-pin female M12 TSI connector.
- (1) M5 x 0.8 threaded hole for FE ground terminal connection that is accessed by removing the M5 set screw plug.

The TSI connector supports the use of a single (non-series), PL e rated, RIFD based contactless safety switches.

The Tool module employs a series of (5) push button switches for setting of the Tool-ID input that allows the customer to distinguish between the different tools that are being used in a robotic cell or on a production line. The Tool-ID is reported through the Master module bitmap. PROFINET requires a FE ground, the Tool module provides a M5 x 0.8 FE ground terminal that is passes FE ground to the customer tooling. See *Section 2.1.1—PROFINET Interface Information* for PROFINET bitmap and detailed I/O information.

2. Product Information

This section provides more detailed information on the behavior of the DL10 modules.

2.1 Master Module

2.1.1 PROFINET Interface Information

Table 2.1 lists the PROFINET interface parameters employed in the DL10 Master module.

Table 2.1—PROFINET Interface Parameters

Parameter	Description
DCP	supported
Fast Startup	supported
Used Protocols (subset)	UDP, IP, ARP, ICMP (Ping)
Topology recognition	LLDP, SNMP V1, MIB2, physical device
VLAN- and priority tagging	yes
Context Management	by CL-RPC
Minimum cycle time	2 ms
Baud rate	100 MBit/s
Data transport layer	Ethernet II, IEEE 802.3

A GSDML file for the Master node is available from our website:

(*www.ati-ia.com/download/edsfiles*) or by email.

Reference the part number: GSDML file 9031-20-1012

Robot input and output bitmaps for the Master node are provided in *Table 2.4* and *Table 2.5*.

Table 2.2—I/O Bit map, Robot Inputs from Master Module			
Byte	**BitNumber**	**Name**	**Description/Function**
0	0	Locked	The Tool Changer is locked.
	1	Unlocked	The Tool Changer is unlocked.
	2	Input/Logic Power Good	US1 Power Present I/P.
	3	Output Power Available	US2 Power Present I/P.
	4	RTL1	Ready-to-Lock Prox1 I/P.
	5	RTL2	Ready-to-Lock Prox2 I/P.
	6	Tool Present	The Master and Tool are in electrical contact.
	7	Tool Power is on	Indicates that the Arc Prevention Circuit is turned ON and power is provided to the Tool.
1	0	Unlatch Enabled	Unlatch Enabled Status Information.
	1	TSIV	TSI Switch Verify.
	2	TSRV	TSI Relay Verify.
	3	Reserved	
	4	RTLV1	Ready-to-Lock Relay 1 Verify.
	5	RTLV2	Ready-to-Lock Relay 2 Verify.
	6 to 7	Reserved	
2	0	Error on Latch	Overload or short circuit on the Latch Output.
	1	Error on Unlatch	Overload or short circuit on the Unlatch Output.
	2	Reserved	
	3	Unsafe Unlatch	Unlatch rejected due to an unsafe condition present.
	4	Lock/Unlock Sensor Fault	Lock and Unlock Inputs ON at the same time.
	5	COMM Error	Tool-ID communication timeout.
	6	RTL/RTLV Mismatch	RTL state does not match the RTLV state.
	7	TSIV/TSRV Mismatch	TSIV state does not match the TSRV state.
3	0 to 7	Reserved	
4	0	Tool-ID Switch1 Bit1	N/A
	1	Tool-ID Switch1 Bit2	
	2	Tool-ID Switch1 Bit4	
	3	Tool-ID Switch1 Bit8	
	4	Tool-ID Switch2 Bit1	
	5	Tool-ID Switch2 Bit2	
	6	Tool-ID Switch2 Bit4	
	7	Tool-ID Switch2 Bit8	

Table 2.2—I/O Bit map, Robot Inputs from Master Module			
Byte	**BitNumber**	**Name**	**Description/Function**
5	0	Tool-ID Switch3 Bit1	N/A
	1	Tool-ID Switch3 Bit2	
	2	Tool-ID Switch3 Bit4	
	3	Tool-ID Switch3 Bit8	
	4	Tool-ID Switch4 Bit1	
	5	Tool-ID Switch4 Bit2	
	6	Tool-ID Switch4 Bit4	
	7	Tool-ID Switch 4 Bit 8	
6	0	Tool-ID Switch5 Bit 1	N/A
	1	Tool-ID Switch5 Bit2	
	2	Tool-ID Switch5 Bit4	
	3	Tool-ID Switch5 Bit 8	
	4 to 7	Reserved	
7	0 to 7		

Table 2.3—I/O Bitmap, Robot Outputs to Master Module			
Byte	**Bit#**	**Name**	**Description/Function**
0	0	Latch	Request Lock.
	1	Unlatch	Request Unlock.
	2	Spare	Spare O/P.
	3	Clear Errors	Reset errors, allow affected I/O to be reactivated.
	4 to 7	Reserved	
1 to 7	Reserved		

2.1.2 System Failure (SF) and Bus Failure (BF) LEDs

When the modules are coupled and communicating properly on the network, the DL10-M LEDs should display as shown in *Figure 2.1*, with the E1 and E2 LEDs flashing red based on the PROFINET communication.

Figure 2.1—LED Display of Properly Functioning Coupled Modules

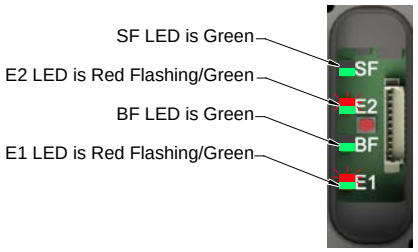

The System Failure (SF) status LED is identified on the module as "SF". It provides device status for power and proper operation. Refer to *Table 2.4* for an outline of this LED's operation.

The Bus Failure (BF) status LED is identified on the module as "BF". It provides PROFINET status information. Refer to *Table 2.5* for an outline of this LED's operation.

Table 2.4—Master Module SF status LED

Status	LED		Note
No Power		Off	No power applied. Check if the voltage is between 20.4 and 28.8 VDC.
Operational[1]		Green (solid)	Normal operation.
Fault		Red (solid)	The fault Internal Diagnostic Error has occurred.
Fault		Red (flashing)	Reset To Factory Push Button was pressed or one of the following faults has occurred: - Communication error with tool module - Input power failure

Note:
1. The LED will be green even if no network connection is established.

Table 2.5—Master Module BF status LED

Status	LED		Note
Operational[1]		Off[1]	No error (Normal operation).
Not OK		Green (solid)	Watchdog timeout; channel, generic or extended diagnosis present; system error.
		Green (flashing)	DCP signal service is initiated via the bus.
		Red (solid)	No configuration.
		Red (flashing)	No data exchange.

Note:
1. If the LED is off it may also indicate the device may be powered off.

2.1.3 Ethernet 1 and Ethernet 2 LEDs

The Ethernet LEDs provide information about link status and activity on the ports of the integrated Ethernet switch.

The Ethernet 1 (E1) LED displays the status of the robot side Ethernet port. The Ethernet 2 (E2) LED displays the status of the tool side Ethernet port. The module status is indicated by the specified LED colors in the following tables.

Table 2.6—Master Module Ethernet 1 (E1) LEDs

Status	LED		Note
No Link		Off	The Master module has no connection to the Ethernet.
Link		Green (solid)	The Master module is connected to the Ethernet but there is currently no data exchange activity.
Active RX/TX		Red (flashing) Green (solid)	There is sporatic data exchange activity with the Ethernet.
PROFINET connection established		Red (solid) Green (solid)	There is continuous data exchange activity with the Ethernet.

Table 2.7—Master Module Ethernet 2 (E2) LEDs

Status	LED		Note
No Link		Off	The Tool module has no connection to the Ethernet.
Link		Green (solid)	The Tool module is connected to the Ethernet but there is currently no data exchange activity.
Active RX/TX		Red (flashing) Green (solid)	There is sporatic data exchange activity with the Ethernet.
PROFINET connection established		Red (solid) Green (solid)	There is continuous data exchange activity with the Ethernet.

2.1.4 Integrated Ethernet Switch

The Master module provides an integrated 2-port Ethernet switch which supports the following:

- Transmission rate 100 MBit/s
- Interface type 100 BASE-TX, isolated
- Half duplex/Full duplex
- Auto Negotiation
- Auto Crossover

Figure 2.2—Master Module LED and Reset Button

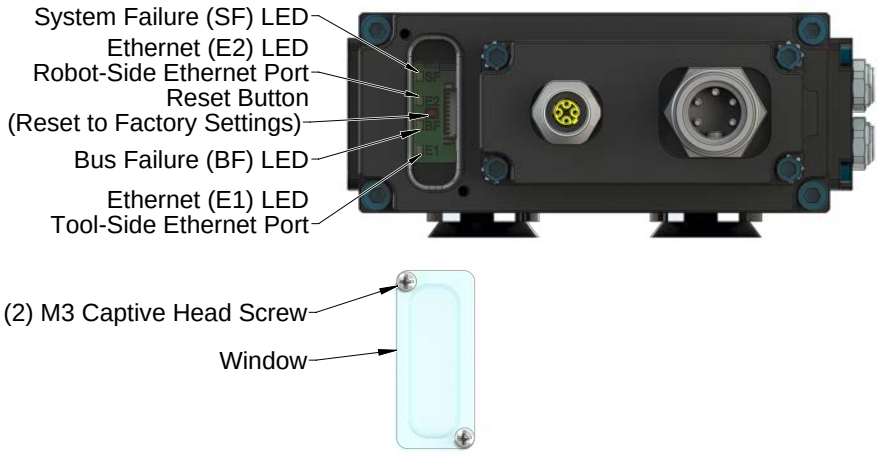

2.1.5 Reset-To-Factory Push-Button

A push button, located under the LED window cover between the E2 and BF LED allows the user to perform a “Reset To Factory” function which clears the PROFINET Name Of Station and the module’s IP address. This is useful when already configured devices get swapped or a broken device gets replaced by an already configured device. See *Section 6.2.2—DL10 Device Replacement Procedures* for a detailed device replacement procedure.

After the push button is pressed the SF LED will blink red, indicating that with the next power cycle the Name of Station and IP address will be cleared.

Make sure to re-apply the LED window cover after access to the push button is not needed anymore.

2.2 Arc Prevention Circuit

The DL10 Module incorporates ATI’s exclusive Arc Prevention Circuit. The Arc Prevention Circuit extends the life of all electrical power contacts by eliminating arcing caused by inductive loads and high inrush current during coupling/uncoupling. The Arc Prevention Circuit makes it possible to couple/uncouple without switching power off and prevents damage to the contacts.

In the DL10 Module, the Arc Prevention Circuit controls the ON/OFF status of the following (2) power signals:

- Input and Logic power US1+
- Output power US2+

The behavior of the Arc Prevention circuit is described in the following sections.

2.2.1 Arc Prevention Circuit Behavior during Coupling

The Master module incorporates ATI's Arc Prevention Circuit, which extends the life of all electrical power contacts by eliminating arcing caused by inductive loads and high inrush current during coupling/uncoupling. The Arc Prevention Circuit makes it possible for the customer to couple/uncouple without switching power off and prevents damage to the contacts.

In the Master module, the Arc Prevention Circuit controls the ON/OFF status of the following (2) power supplies:

2. Input and Logic power US1+
3. Output power US2+

The behavior of the Arc Prevention circuit is more fully described in the following sections.

2.2.2 Arc Prevention Circuit Behavior during Coupling

The behavior of the Arc Prevention circuit during coupling can be more clearly understood by referring to *Figure 2.3*.

When the robot and Master approach the Tool for pick up, electrical contact between the Master and Tool pin contacts occurs. Soon after the Latch command is turned ON, the Arc Prevention Circuit will turn on US1 and US2 power. The time delay between when the LATCH output is turned ON to when power is actually available to the EOAT (time T_1 in the diagram) is less than 100 ms.

Important: The Arc Prevention Circuit will only allow power to pass to the Tool after the LATCH command has been issued and the Master and Tool module's electrical contacts are fully engaged.

Figure 2.3—Power On Timing

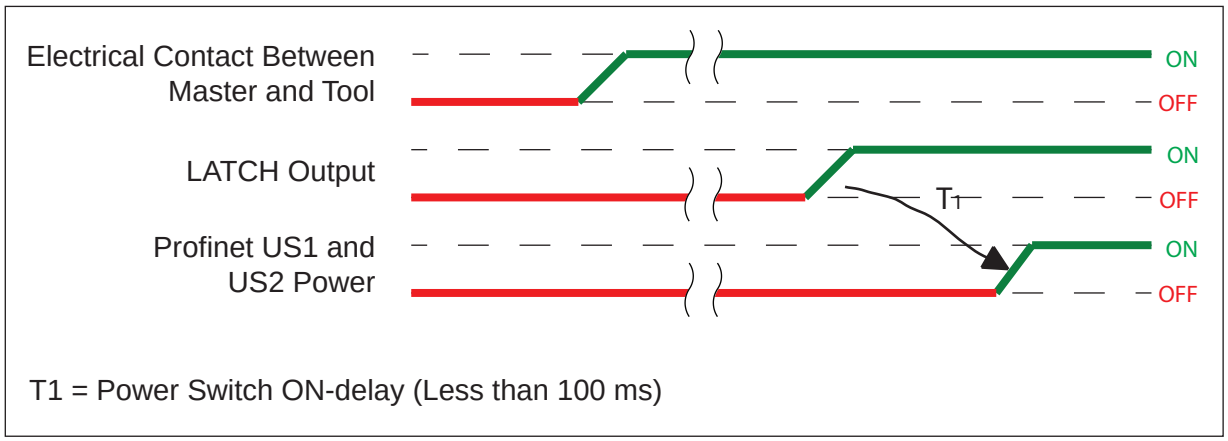

2.2.3 Arc Prevention Circuit Behavior during Uncoupling

The behavior of the Arc Prevention Circuit during uncoupling can be more clearly understood by referring to *Figure 2.4*.

Immediately after the UNLATCH command is issued, the Arc Prevention Circuit will turn off US1 and US2 power. The power off time delay between the UNLATCH command and the switching off of power (designated T2 in the diagram) is less than 50 ms.

Some time after power is turned off and the Master and Tool begin to separate, electrical contact between Master and Tool pin contacts will be lost. This occurs with a delay, designated T3 in the diagram, after the UNLATCH command is issued. The magnitude of time T3 is a function of many factors, including the weight of the EOAT, the friction between Master and Tool alignment pins, etc. but is usually not shorter than 100 ms.

Figure 2.4—Power Off Timing

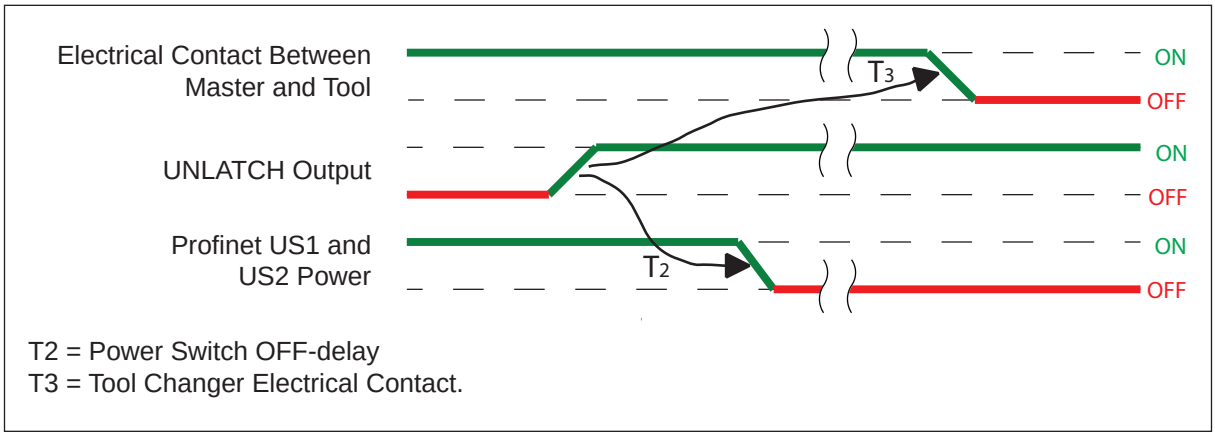

2.3 Tool Module

In addition to providing Tool-ID and Tool side TSI, the Tool module is a pass-through for PROFINET signals and power to downstream equipment. For details, refer to *Section 9—Drawings*.

2.3.1 Tool-ID

The Tool module utilizes a rapid communication method to report the Tool-ID information from the push button switches to the Master module as soon as the Tool Changer or Utility Coupler is coupled. Typically the Tool-ID information is available to the Master within 150 ms from the time the Tool Changer or Utility Coupler is coupled.

NOTICE: When a Tool module is not present, the Master module reports an invalid ID 1>0xFFFF.

(5) push button switches are provided on the Tool module for setting of a Tool-ID number.

If the plastic window and seal above the Tool-ID switches are removed, ensure the seal and window are re-positioned correctly to prevent a leakage path to the module inside.

Figure 2.5—Tool Module, Tool-ID Switch Settings

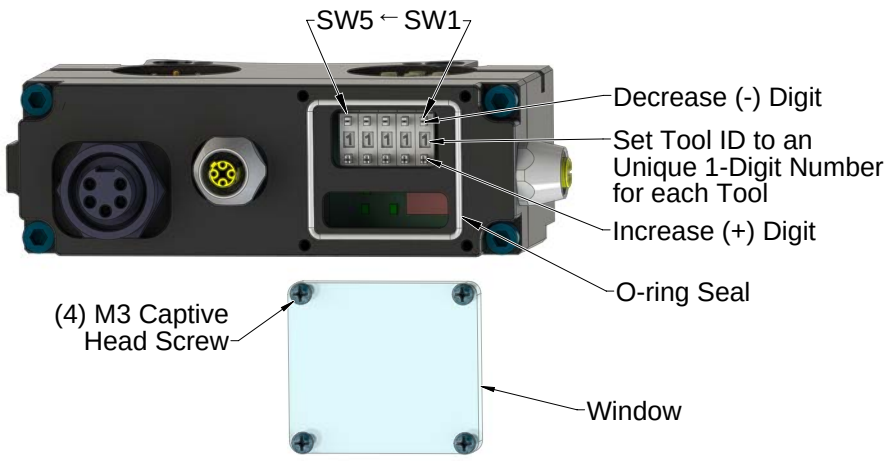

2.4 Tool Side TSI

CAUTION: It is required to use a PLe rated non-contact safety switch such as the CES-AP with the DL15 module. Contact ATI before using another safety switch.

The tool stand interlock (TSI) circuit ONLY allows the Tool to release while in the tool stand or storage location as indicated by actuation of a customer-integrated switch. Refer to the following for switch requirements:

- For the DL10 Tool module, the customer must integrate a single throw, double pole (Normally Open, spring return) limit switch (refer to *Figure 2.6*).
- For the DL15 Tool module, the customer must integrate a (2) channel, PL e rated contactless safety sensor, ATI Part Number 9120-TSL-SS-9015 (Euchner CES-I-AP-M-C04-USB-117324), refer to *Figure 2.7*.

The safety switch should be mounted to the end effector so that the switch is “made” only when the Tool is in the tool stand or storage location.

There is both a firmware and a hardware interrupt for the Unlatch output bit.

- Unlatch Enabled in the bitmap reports that the tool change will process an Unlatch command if issued. Refer to *Section 2.1—Master Module*.
- The UNLATCH output signal is routed through the TSI relay in the Tool side module, and thus, the UNLATCH output signal cannot be completed without the TSI switch circuit being closed.

A double pole, single-throw limit switch or two-chanel PL e rated contactless safety sensor (TSI Limit Switch) is integrated on the EOAT such that the switch is made when the Tool is in the stand. One set of the TSI Switch contacts sources US1 power and drives the TSI Relay (TSRV), thus closing the Unlatch solenoid circuit. The second set of TSI Limit Switch contacts sources US1 power and drives the TSIV input.

The following TSI status signals are also reported in the bitmap (refer to *Section 2.6—Software*):

- **TSRV** (TSI Relay Verify): Status of the TSI Relay in the Tool module driven by first contact in the switch.
- **TSIV** (TSI Limit Switch Verify): Status of second contact of the limit switch that is located on the Tool.
- **RTLV** (Ready to Lock Verify): Ready to Lock Verify status of RTL bypass relay in the Master module. Refer to *Section 2.5.1.1—RTL Bypass Relay Circuit*.

Figure 2.6—(DL10) Tool Stand Interlock (TSI) with a Mechanical Safety Switch

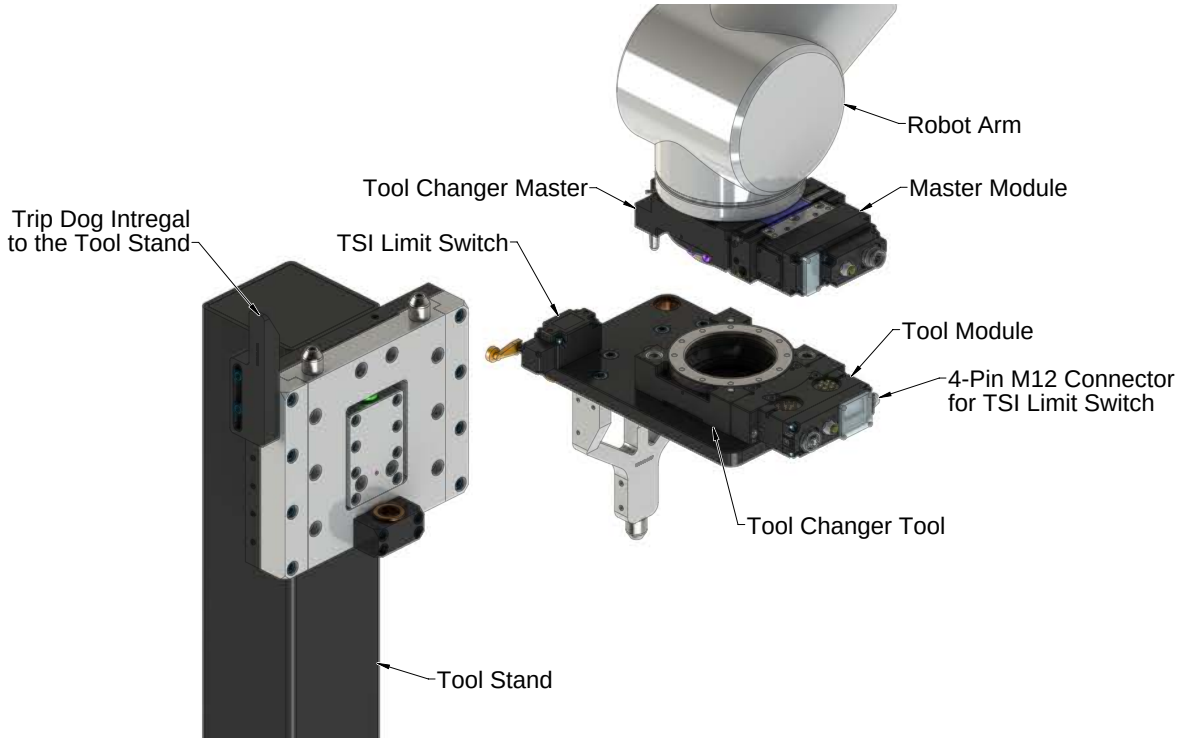

Figure 2.7—(DL15) Tool Stand Interlock (TSI) with a Contactless Safety Sensor

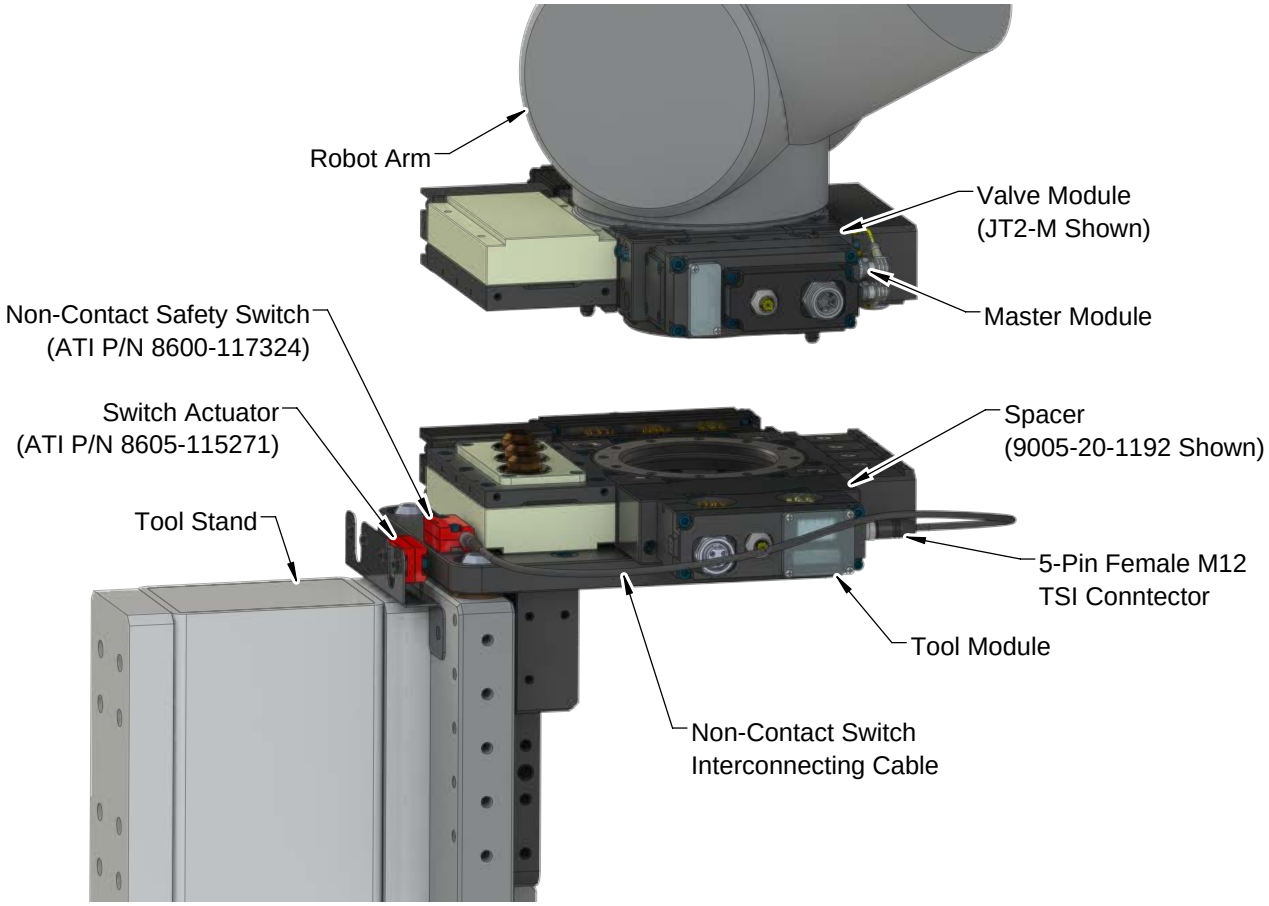

2.5 TSI Operational Function

The TSI system provides safe operation, by preventing the Tool Changer from unintentionally unlocking when the Tool is attached and not secured in the tool stand. The following sections describe the Tool Changer states and how the TSI system controls the unintentional unlocking of the Tool Changer.

2.5.1 The Master is Free of the Stand and the Tool is in the Stand

The Master is positioned away from the tool stands, and all the Tools are safely nested in the tool stands.

When there is no tool present (therefore both the RTL sensors are low) the RTL Relay allows the Unlatch solenoid circuit to be completed and an Unlatch command is processed.

2.5.1.1 RTL Bypass Relay Circuit

The Master module has a normally closed RTL bypass circuit (RTL relay). If the Tool Changer is inadvertently locked without a Tool attached, the Tool Changer can still be safely unlocked automatically since no Tool is present. When a Tool is present (and therefore the RTL sensor is high) the RTL Relay is energized and the Unlatch solenoid circuit is diverted through to the Tool side. The second set of RTL relay contacts sources US1 power and provides the RTLV input for health status monitoring of the RTL Relay.

Figure 2.8—TSI Circuit with Master Free of Stand, Tool in the Stand (DL10-T Shown)

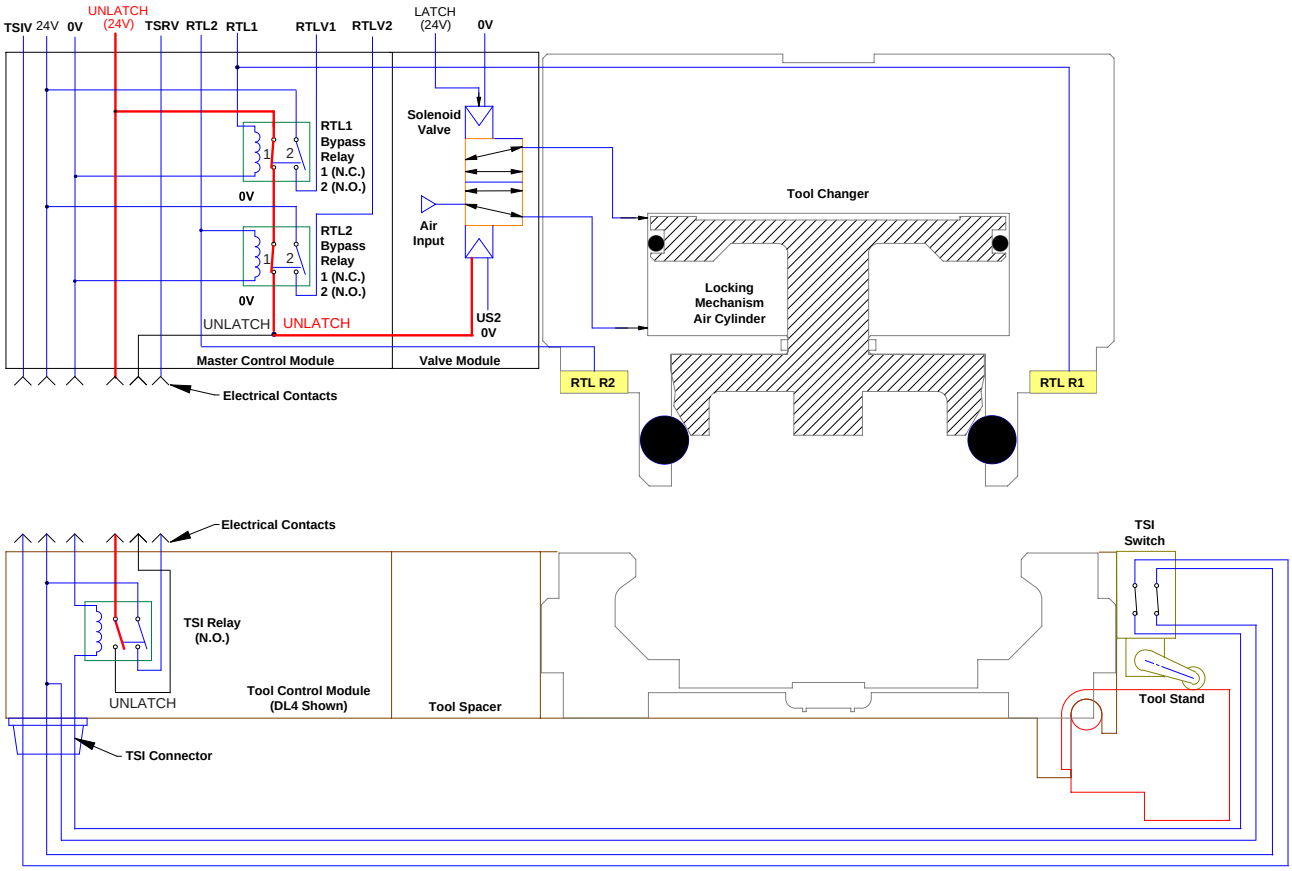

The RTL bypass relay has a second set of contacts that are used to provide the RTLV diagnostic signal (when the RTL bypass relay is open, the RTLV signal should be off). The RTLV signal can indicate if the RTL bypass relay is operating properly.

Figure 2.9—Fault Monitoring			
RTL1/ RTL2	**RTLV1/ RTLV2**	**Tool Presence**	**Comments**
OFF	OFF	ON[1]	RTL1/RTL2 Not Operating Properly[2].
ON	ON	OFF[1]	
OFF	ON	OFF	Relay or RTL1/RTL2 Not Operating Properly[2].
ON	OFF	ON	
ON	ON	ON	Operating Properly.
OFF	OFF	OFF	

Notes:

1. Tool module present as evidenced by ability to read Tool-ID.
2. Dangerous situation where an unintentional Unlatch output signal could result in Tool release.

2.5.2 The Master is Coupled with the Tool and the Tool is in the Stand

The Master and Tool are coupled in the tool stand and the Master has detected a Tool is present with the RTL1 and RTL2 sensors ON. Thus opening the RTL bypass circuit and turning the RTLV1 and RTLV2 signals ON. The unlatch signal is now routed through the TSI circuit. With the Tool in the stand and the first set of TSI switch contacts closed, allowing the TSRV relay to close and no longer interrupting the unlatch signal. The second set of TSI switch contacts send the TSIV signal, allowing an unlatch to be processed.

Figure 2.10—TSI Circuit with Master and Tool Locked (DL10-T Shown)

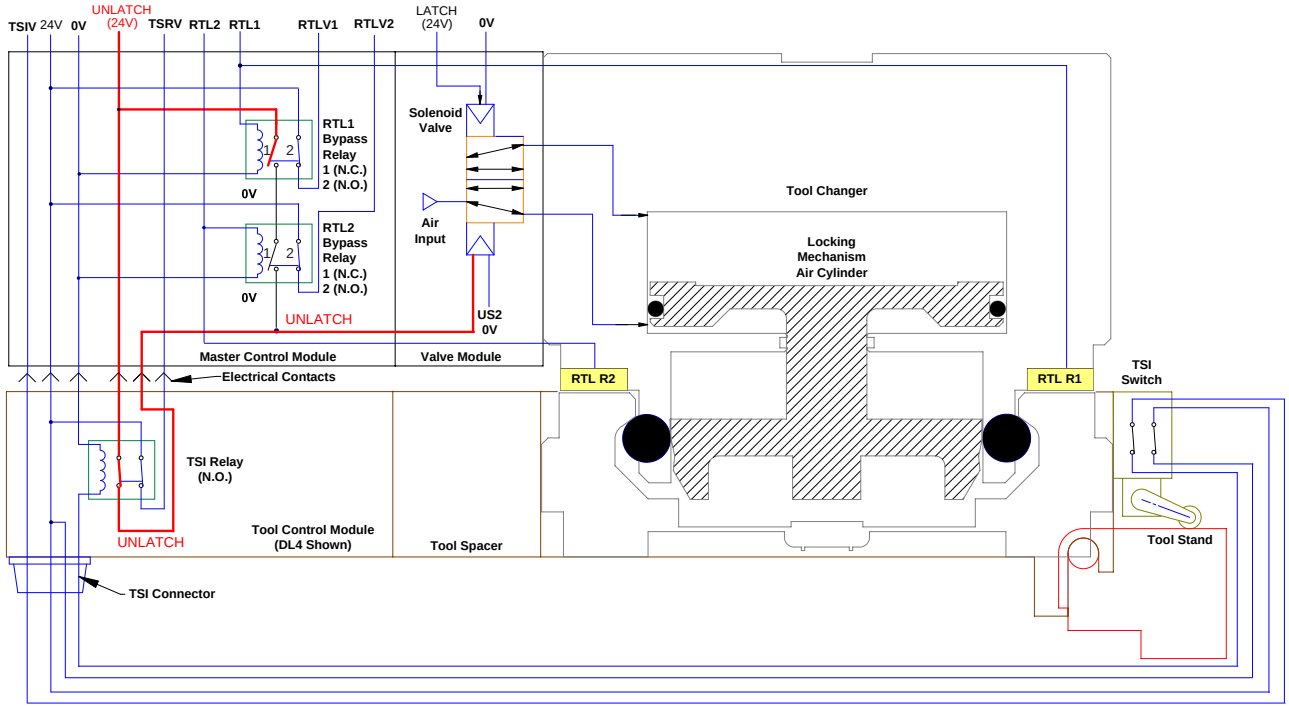

2.5.3 The Master is Coupled with the Tool and the Tool is Free of the Stand

The Master and Tool are coupled and are free of the tool stand. The RTL bypass circuit is open, as indicated by RTLV1 and RTLV2 being ON. The TSI Switch (Normally open) is not made and thus breaking the TSI circuit and interrupting an UNLATCH command.

Figure 2.11—TSI Circuit with Master and Tool Locked and Free of Stand (DL10-T Shown)

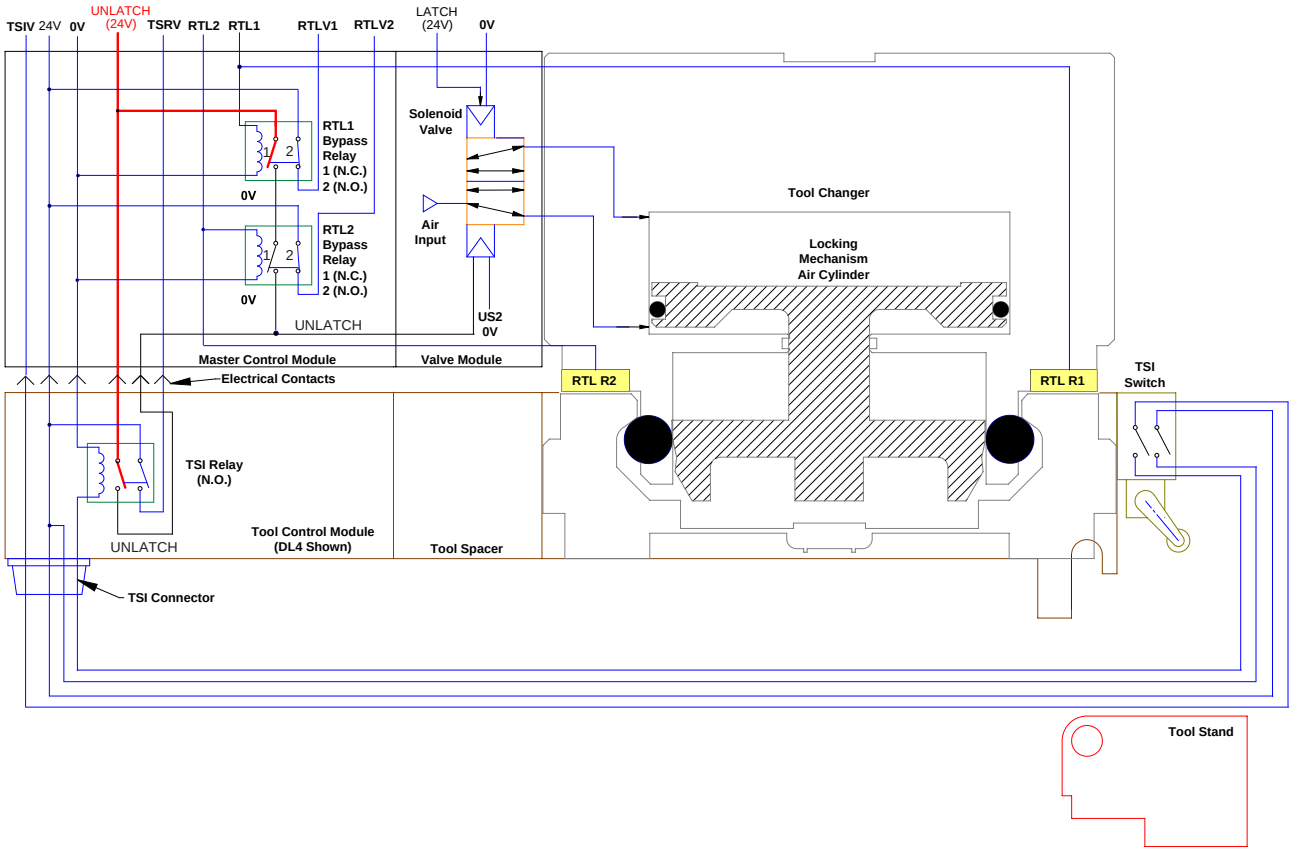

2.5.4 TSI Behavior

The modules rely on the status of the Ready-To-Lock (RTL) sensors and the TSIV input to determine when it is appropriate to unlatch the Tool. The RTL sensors indicate if the Master and Tool are coupled while the TSIV input indicates when the TSI switch on the Tool is actuated, thereby indicating that the Tool is in the stand.

There is both a firmware and hardware interrupt for the Unlatch output signal. Firmware compares the RTL sensor signals with the TSIV input and enables the Unlatch output signal only if it meets the conditions in *Table 2.8*.

Table 2.8—UNLATCH Enable Logic and Truth Table

Inputs			Output	Status of Master Body
Tool Present	TSIV	Disable UNLATCH Error Condition	UNLATCH Enabled	
0	0	0	1	No Tool and positioned in the free air.
0	1	0	1	No Tool and positioned in the tool stand (This is a transient state which is only true just prior to RTL being made).
1	0	0	0	Tool is present and positioned in the free air.
1	1	0	1	Tool is present and positioned in the tool stand.
X	X	1	0	Error condition.

For example, if the module receives an UNLATCH output signal and the RTL sensor signals indicate that Master and Tool are coupled but the TSIV indicates that the Tool is not in the tool stand, then the UNLATCH output signal is ignored.

3. Installation

The control/signal modules are typically installed by ATI prior to shipment. The steps below outline the field installation or removal as required. For wiring information refer to *Section 9—Drawings*.

WARNING: Do not perform maintenance or repair(s) on the Tool Changer or modules unless the Tool is safely supported or placed in the tool stand, all energized circuits (e.g. electrical, air, water, etc.) are turned off, pressurized connections are purged and power is discharged from circuits in accordance with the customer's safety practices and policies. Injury or equipment damage can occur with the Tool not placed and energized circuits on. Place the Tool in the tool stand, turn off and discharge all energized circuits, purge all pressurized connections, and verify all circuits are de-energized before performing maintenance or repair(s) on the Tool Changer or modules.

CAUTION: Thread locker applied to fasteners must not be used more than once. Fasteners might become loose and cause equipment damage. Always apply new thread locker when reusing fasteners.

3.1 Master Control/Signal Module Installation

Refer to Figure 3.1.

Tools required: *3 mm and 5 mm hex keys*

Supplies required: *Clean rag, Loctite® 242, M5 fastener for grounding terminal*

NOTICE: If module being installed is not new "out of the box" and has been previously commissioned refer to *Section 6.2.2—DL10 Device Replacement Procedures* for instructions.

1. Place the Tool in a secure location.
2. Uncouple the Master and Tool plates.
3. Turn off and de-energize all energized circuits (e.g. electrical, air, water, etc.).
4. Clean the mating surfaces.
5. Place the module into the appropriate location on the valve adapter. Align the module with the valve adapter using the dowels in the bottom of the ledge feature. Refer to *Figure 3.2*.
6. Apply Loctite 242 to the (2) M6 socket head cap screws. Install the (2) M6 socket head cap screws securing the module to the valve adapter and tighten to 70 in-lbs (7.9 Nm).
7. Connect the (L) Lock, (U) Unlock, and (R1 and R2) RTL sensor cable connectors to the Master module.
8. Connect the power cable and PROFINET cable connectors to the Master module.

NOTICE: The module will automatically get the name and the IP address assigned. After a few seconds, it should be operating on the network.

9. Remove the 5 mm set screw from the FE ground terminal using a 3 mm hex key.
10. Connect the ground to the FE grounding terminal using a M5 customer supplied fastener.
11. After the procedure is complete, resume normal operation.

Figure 3.1—Master Module Installation

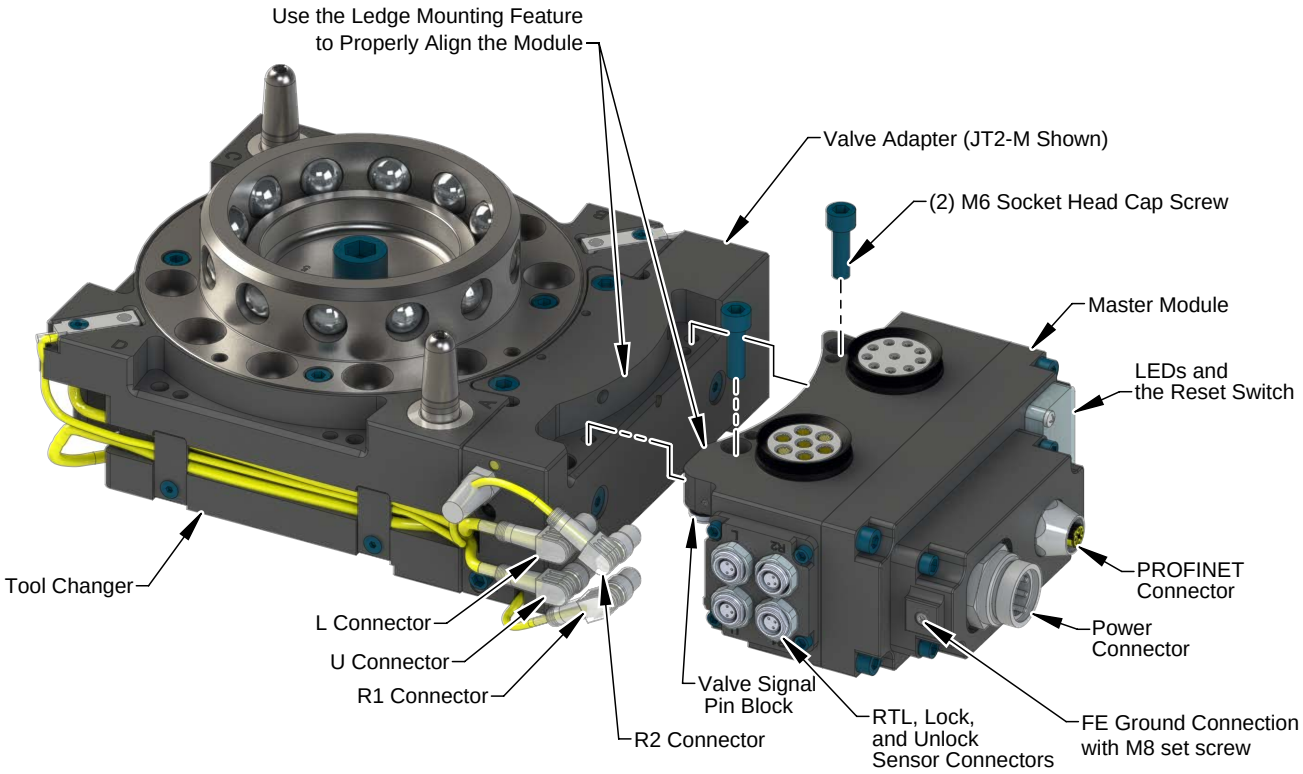

3.2 Master Control/Signal Module Removal

Tools required: *5 mm Allen wrench (hex key)*

1. Place the Tool in a secure location.
2. Uncouple the Master and Tool plates.
3. Turn off and de-energize all energized circuits (e.g. electrical, air, water, etc.).
4. Disconnect the (L) Lock, (U) Unlock, and (R1 and R2) RTL sensor cable connectors from the Master module.
5. Disconnect the power cable and PROFINET cable connectors from the Master module.
6. Disconnect the ground from the FE grounding terminal.
7. Support the control/signal module and remove the (2) M6 socket head cap screws and lower the module until it clears the guide pin.

3.3 Tool Control/Signal Module Installation

Refer to Figure 3.2.

Tools required: 3 mm and 5 mm hex keys

Supplies required: *Clean rag, Loctite 242, M5 fastener for grounding terminal*

1. Place the Tool in a secure location.
2. Uncouple the Master and Tool plates.
3. Turn off and de-energize all energized circuits (e.g. electrical, air, water, etc.).
4. Clean the mating surfaces.
5. Set the Tool-ID. Refer to *Section 3.5—Setting the Tool-ID.*
6. Place the module into the appropriate location on the valve adapter spacer. Align the module with the valve adapter spacer using the dowels in the bottom of the ledge feature. Refer to *Figure 3.2*.

7. Apply Loctite 242 to the supplied M6 socket head cap screws. Install the (2) M6 socket head cap screws securing the module to the valve adapter spacer and tighten to 70 in-lbs (7.9 Nm).
8. Connect the TSI safety switch cable to the Tool module.

NOTICE: For the DL10 and DL15 Tool modules, a crossover cable is needed to connect Tool side devices when using a FSU (Fast Start Up).

9. Connect the power cable and PROFINET cable connectors to the Tool module.
10. Remove the 5 mm set screw from the FE ground terminal using a 3 mm hex key.
11. Connect the ground to the FE grounding terminal using a M5 customer supplied fastener.
12. After the procedure is complete, resume normal operation.

Figure 3.2—Tool Module Installation (DL10-T Shown)

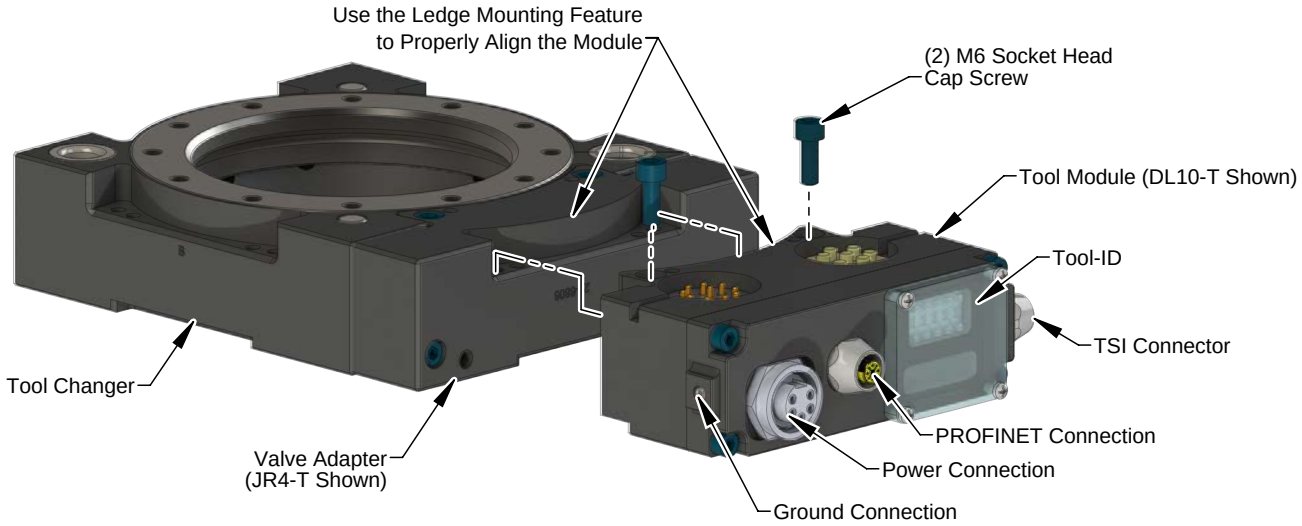

3.4 Tool Control/Signal Module Removal

Tools required: *5 mm Allen wrench (hex key)*

1. Place the Tool in a secure location.
2. Uncouple the Master and Tool plates.
3. Turn off and de-energize all energized circuits (e.g. electrical, air, water, etc.).
4. Disconnect the TSI safety switch cable from the Tool module.
5. Disconnect the power cable and PROFINET cable connectors from the Tool module.
6. Disconnect the ground from the FE grounding terminal.
7. Support the Tool module and remove the (2) M6 socket head cap screws using a 5 mm Allen wrench. Lift up on the module until it clears the guide pin. Refer to *Figure 3.2*.

3.5 Setting the Tool-ID

(5) push-button switches are provided on the Tool module for setting of a Tool-ID number. Each Tool must have a unique 5 digit Tool-ID number.

Tools required: *Phillips screwdriver*

Figure 3.3—Setting the Tool ID

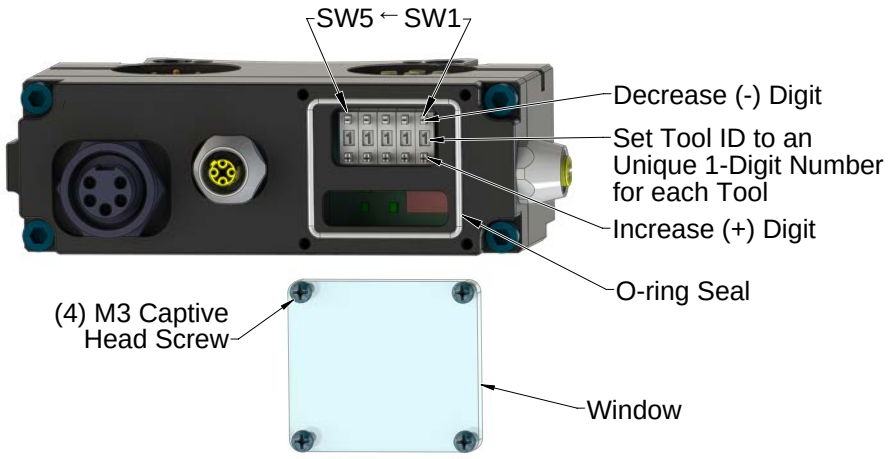

1. Loosen the (4) M3 captive head screws and remove the Tool-ID window.
2. Use a non-conductive tool (e.g., plastic stylus) to press on the Tool-ID push-buttons to increase (+) or decrease (-) the digit value from 0 to 9. Set the Tool-ID to the desired unique (5) digit number from 00000 to 99999 for each tool.
3. Re-install the Tool-ID window and tighten the M3 captive head screws.

3.6 PROFINET Interface

The PROFINET interface parameters and I/O bitmaps in the modules are found in *Section 2.1.1—PROFINET Interface Information* of the manual. These should be thoroughly understood prior to operating the Tool Changer. A detailed operational sequence is provided in *Section 4.4—Recommended Sequence of Operation.*

3.7 Utility Schematic

Refer to drawings in *Section 9—Drawings* for customer interface and wiring details for the modules.

3.8 Electrical Connections

Refer to drawings in *Section 9—Drawings* for the electrical connections and pin/signal information.

4. Operation

A recommended Sequence of Operations is provided in *Section 4.4—Recommended Sequence of Operation* of this manual. This procedure is to be used as a general guide when programming a robot or PLC for use with a Tool Changer and control/signal modules. This procedure is intended for “automatic” modes used during normal application processes.

CAUTION: Improper cable routing can result in wires and cables being pinched in the joint between the Tool Changer plates and premature failure of the electrical connectors. Properly route and secure all cables, particularly on the Master side.

NOTICE: Grounding and power supply lines are required to be on certain pin locations of the customer interface connector. See the drawings for pin out information and location of the I/O signals.

Refer to the specific Tool Changer manual for coupling conditions of the Tool Changer and *Section 4.4—Recommended Sequence of Operation*. When coupled, the module Tool can be communicated with, Tool-ID can be read (if equipped), and attached end-effectors can be used.

4.1 Lock, Unlock, and RTL Sensor Cable LED Behavior

The Lock, Unlock, and RTL sensor cables are equipped with two LEDs. The Green LED indicates the sensor has power and the yellow LED indicates the switch has been made. The LED behavior is affected by the control/signal module.

Table 4.1—Sensor Cable LED Behavior for Common Tool Changer Positions

Tool Changer Position	Sensor cable LED Behavior			
Unlocked (Tool Changer Master plate free of stand with no Tool plate attached)	RTL (R1) Sensor	ON OFF	ON ON	Unlock (U) Sensor
	RTL (R2) Sensor	ON OFF	ON OFF	Lock (L) Sensor
Ready to Lock (Tool Changer Master plate with Tool plate parallel and at a distance of 1.22 mm or less from each other)	RTL (R1) Sensor	ON ON	ON ON	Unlock (U) Sensor
	RTL (R2) Sensor	ON ON	ON OFF	Lock (L) Sensor
Locked (Tool Changer Master plate with Tool plate attached in fully locked position)	RTL (R1) Sensor	ON ON	ON OFF	Unlock (U) Sensor
	RTL (R2) Sensor	ON ON	ON ON	Lock (L) Sensor
Missed Tool (Tool Changer Master plate locked with no Tool plate attached)	RTL (R1) Sensor	ON OFF	ON OFF	Unlock (U) Sensor
	RTL (R2) Sensor	ON OFF	ON OFF	Lock (L) Sensor

Figure 4.1—Lock, Unlock, and RTL Sensor cable LED Behavior (Shown in Locked Position)

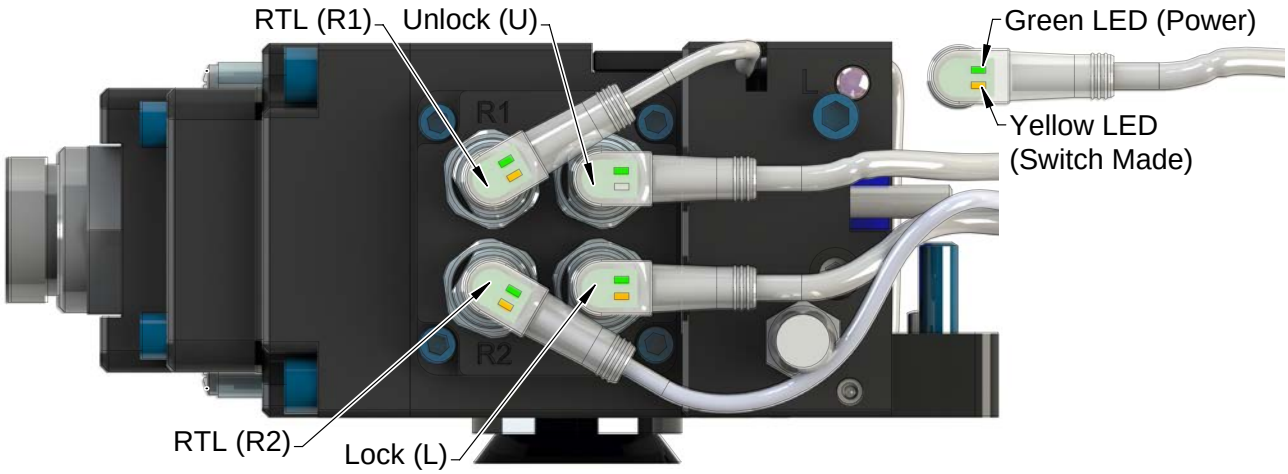

(Control module shown for reference only)

4.2 Inputs

The following describes the most critical inputs from the ATI Master module.

4.2.1 Locked

An input indicating that the coupling mechanism is in the Lock position.

4.2.2 Unlocked

A proximity sensor input indicating that the coupling mechanism is in the Unlocked position.

4.2.3 Input/Logic Power Good

An input indicating the presence of Input and Logic Power (US1) at the ATI master module. US1 power must be between 11 to 29 VDC for the DL10 Tool module or 20.4 to 27.6 VDC for the DL15 Tool; otherwise, the Tool Changer will NOT latch or unlatch. For DL10 Tool the valve and for DL15 Tool the safety switch hardware are limiting factors that determine this voltage range.

4.2.4 Output Power Available

An input indicating the presence of Output Power (US2) at the ATI master module. US2 power must be between 20.4 to 29 VDC; otherwise, the Tool Changer may not properly latch.

4.2.5 RTL1 and RTL2

Proximity sensor inputs indicate that the Tool Changer Master is close to the Tool and the Master and Tool are okay to couple. These proximity sensors are installed in the Master plate. Sense targets are installed in the Tool plate to indicate the Master is adjacent to the tool (within ~ 0.06” or 1.5 mm).

4.2.6 Tool Present

An input indicating the Master module is electrically connected to the Tool.

4.2.7 Tool Power Is On

The Tool Power Is On bit indicates that the Arc Prevention circuit has activated and power is passed to the tool side.

4.2.8 Unlatch Enabled

The Unlatch Enabled bit indicates when the preconditions for unlatching the Tool Changer have been met. The preconditions include:

- No Errors
- Input/Logic Power Good (US1) and Output Power Available (US2) are within operating range
- UNLOCKED bit is OFF
- LATCH bit is OFF
- The Tool is in the tool stand as indicated by TSIV and TSRV.

4.2.9 TSIV

An input providing health status monitoring of the second contact of the limit switch that is located on the Tool.

4.2.10 TSRV

An input provided for the health status monitoring of the TSI Relay.

4.2.11 RTLV1 and RTLV2

An input provided for the health status monitoring of the RTL Relay.

4.3 Error Conditions

The following describes the reported error conditions and explains how to reset the condition.

4.3.1 ERROR ON LATCH

This bit indicates that a short circuit or overload condition on the LATCH output has been detected. The error condition can be reset with the Clear Errors bit.

4.3.2 ERROR ON UNLATCH

This bit indicates that a short circuit or overload condition on the UNLATCH output has been detected. The error condition can be reset with the Clear Errors bit.

4.3.3 UNSAFE UNLATCH

An UNLATCH command shall only be performed if the following conditions are met:

- TSIV and TSRV must be ON indicating that the tool changer is nested safely in the Tool Stand.
- The LATCH bit must be OFF.
- The UNLOCKED bit must be OFF.
- Input/Logic Power Good bit must be ON.
- Output Power Available bit must be OFF.

The UNSAFE_UNLATCH bit will be ON when the user sends an unlatch command without the all preceding conditions met. The status of module is monitored immediately after an UNLATCH command and will disable the Unlatch and turn off Unlatch immediately. If UNLATCH is inadvertently held ON during a power cycle the UNSAFE_UNLATCH error will be generated. This error bit will be reset when a new UNLATCH command is received (UNLATCH command removed and reapplied) and the UNLATCH_ENABLE conditions are met or with the rising edge of the Clear Errors bit.

4.3.4 RTL/RTLV Mismatch

This bit indicates the RTL and RTLV inputs do not have the equivalent or complimentary inputs during the same state. The error condition can be reset with the Clear Errors bit.

4.3.5 TSIV/TSRV Mismatch

This bit indicates the TSIV and TSRV inputs do not have the equivalent or complimentary inputs during the same state. The error condition can be reset with the Clear Errors bit.

4.3.6 Lock/Unlock Sensor Fault

This error bit will be set if the Locked and Unlocked Sensors are on at the same time. If the condition is not on anymore then the bit shall be automatically reset.

4.3.7 COMM Error

The Tool-ID is available to the Master within 150 ms from the time the changer is coupled; otherwise, a COMM Error is set in the bit map. COMM Error indicates that Tool-ID communication from the Tool to the Master has timed out. The error condition can be reset with a Clear Errors bit.

Table 4.2—Error Conditions			
Error Bit	**Error Description**	**Disables the UNLATCH**	**Reset with**
Output Power failure	The US2 power voltage is insufficient.	No	Automatically resets.
LATCH Output Overload	Short circuit detection on LATCH output	Yes	“Clear Errors”-Bit
UNLATCH Output Overload	Short circuit detection on UNLATCH output to Valve 1.	Yes	“Clear Errors”-Bit
SPARE Output Overload	Reserved.	No	“Clear Errors”-Bit
UNSAFE UNLATCH COMMAND	Unlatch requested under unsafe conditions	Yes	Cycle the UNLATCH output bit or “Clear Errors”-Bit
Input/Logic Power Failure	The US1 power voltage is insufficient.	Yes	“Clear Errors”-Bit
RTL/RTLV Mismatch	The RTL/RTLV inputs are not ON at the same time.	Yes	“Clear Errors”-Bit
TSIV/TSRV Mismatch	The TSIV/TSRV inputs are not ON at the same time.	Yes	“Clear Errors”-Bit
LOCK/UNLOCK Sensor Fault	LOCKED and UNLOCKED Sensor on at the same time	No	Correct error
COMM Error	TOOL-ID timeout error	No	Cycle the Tool Changer (Unlock and Lock again) or “Clear Errors”-Bit

4.4 Recommended Sequence of Operation

Before programing can take place, the following condition must be met:

- Input and Output Auxiliary 24 VDC power is available and within acceptable range (20.4 - 28.8 VDC).
- Air is supplied to the integrated valve and within acceptable range (60 - 100 psi).

Figure 4.2—Master Free with Tool In the Tool Stand

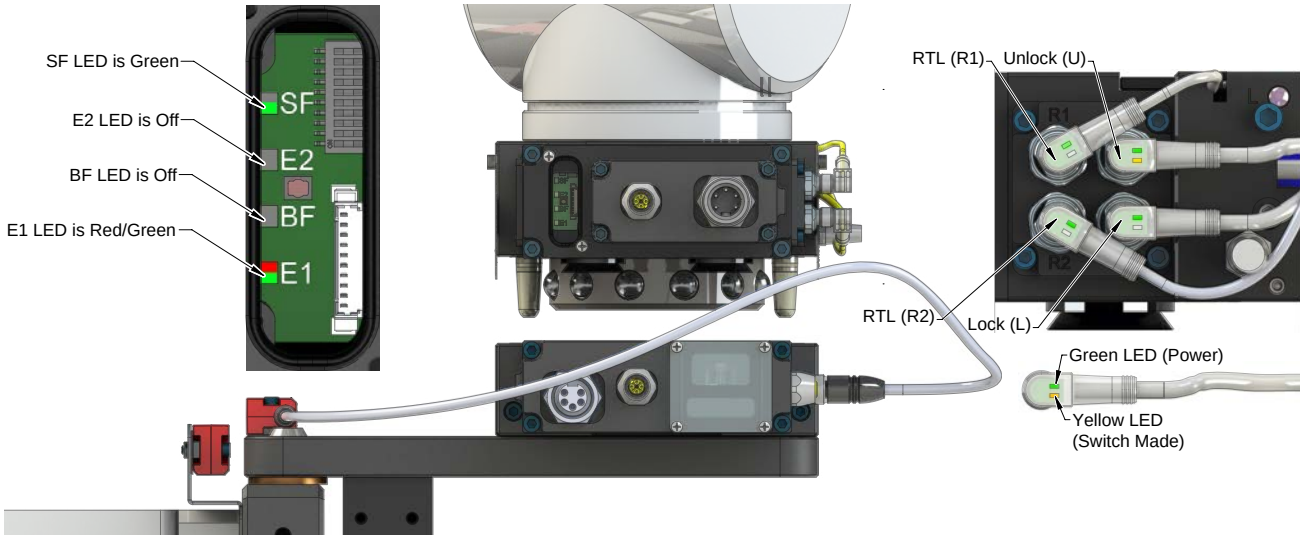

NOTICE: If the LEDs don't match what is shown, refer to *Section 2.1.2—System Failure (SF) and Bus Failure (BF) LEDs* or *Section 2.1.3—Ethernet 1 and Ethernet 2 LEDs* for possible issues.

1. The robot and Tool Changer master are free of the stand or storage location, the Tool Changer is uncoupled and the Tool Changer locking mechanism is fully retracted (unlocked condition). The tool is by itself in the tool stand. No error or fault conditions exist.

   a. The following inputs are ON:
      i. **Unlocked**
      ii. **Unlatch Enabled**
      iii. **Input/Logic Power Good**
      iv. **Output Power Available**

   b. The following inputs are OFF:
      i. **Locked**
      ii. **RTLV1** and **RTLV2**
      iii. **Tool Present**
      iv. **RTL1** and **RTL2**
      v. **Tool Power is ON**
      vi. **TSRV**
      vii. **TSIV**
      viii. **Tool-ID** invalid (all 1>0xFFFF)

   c. The following output is ON:
      i. **Unlatch**

NOTICE: For units with a single solenoid valve, the **Unlatch** output must remain ON. For units with a double solenoid valve, the **Unlatch** output can be turned OFF, after the **Unlocked** input indicates the Tool Changer is in an unlocked state.

   d. The following output is OFF:
      i. **Latch**

2. If the Master is locked, unlock the Master. (This must be done prior to the Master entering the Tool to prevent the ball bearings from impinging on the Tool bearing race.)

   a. If ON, turn the **Latch** output OFF and turn the **Unlatch** output ON.

   b. The **Locked** input turns OFF and a short time later the **Unlocked** input turns ON and remains ON, indicating that the Tool Changer locking mechanism unlatch operation is complete. For units with double solenoid valves, after the **Unlocked** input turns ON the **Unlatch** output can be turned OFF.

Figure 4.3—Master Moves into Tool and is parallel within 0.06” to 0.15”

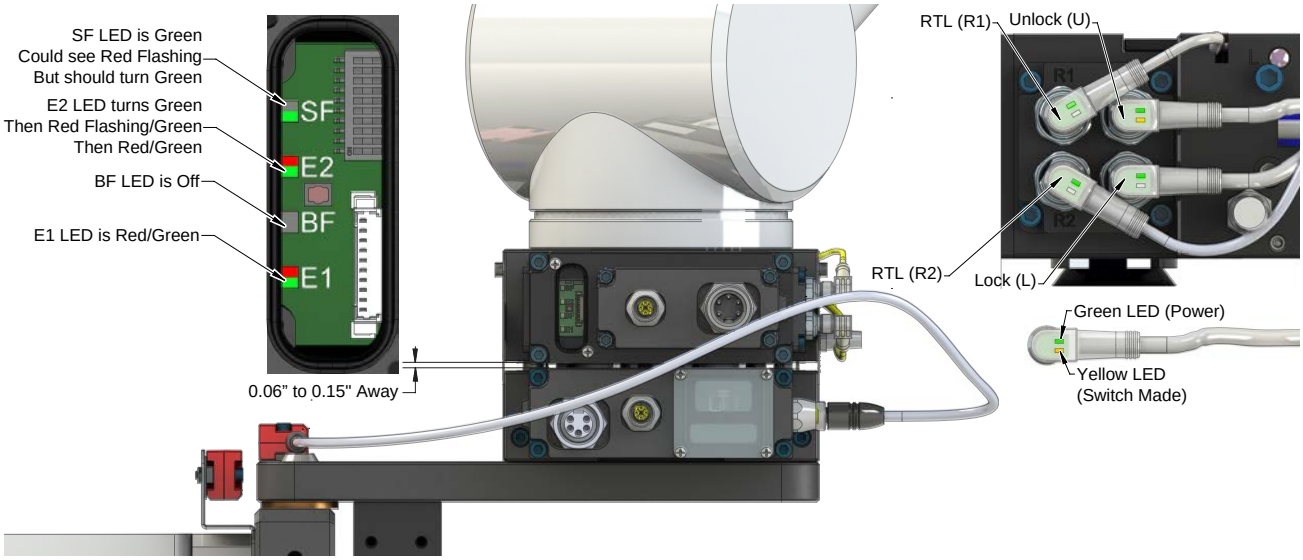

NOTICE: If the LEDs don’t match what is shown, refer to *Section 2.1.2—System Failure (SF) and Bus Failure (BF) LEDs* or *Section 2.1.3—Ethernet 1 and Ethernet 2 LEDs* for possible issues.

3. Robot and Master move into the Tool, are parallel and within 0.15” of the Tool, for example: the module contact pins meet but the **RTL** sensors have not yet sensed the targets on the tool.

   a. The **Tool Present** and **TSIV** and **TSRV** inputs are ON, indicating that the Master and Tool are in close proximity of each other and verifying the operation of the **TSI limit switch**.

   b. When the **Tool Present** input is ON, **Tool-ID** is available within 50 ms.

   c. Power is not yet available on the Tool. The bit **Tool Power is On** is OFF.

Figure 4.4—Master Moves into Tool and is parallel at 0.06”

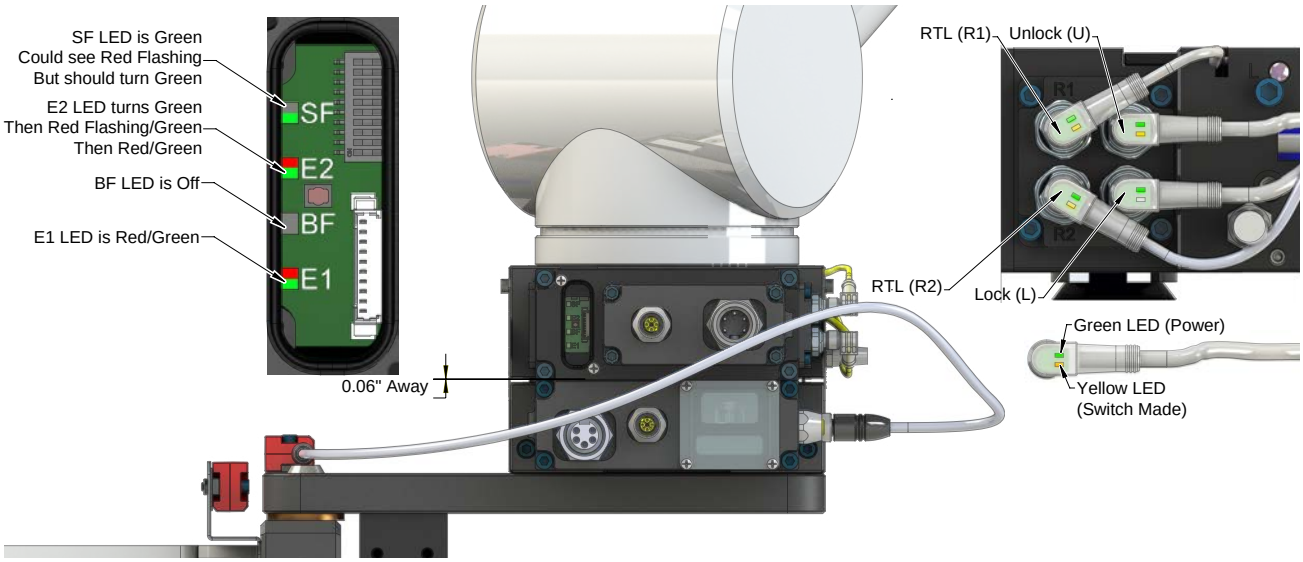

NOTICE: If the LEDs don’t match what is shown, refer to *Section 2.1.2—System Failure (SF) and Bus Failure (BF) LEDs* or *Section 2.1.3—Ethernet 1 and Ethernet 2 LEDs* for possible issues.

4. Robot and Master move into the Tool are parallel and within 0.06” of the Tool.

   a. The **RTL1** and **RTL2** sensors are ON, indicating that its ok to couple the Tool.
   b. The **RTLV1** and **RTLV2** are ON.

Figure 4.5—Master Coupled with Tool

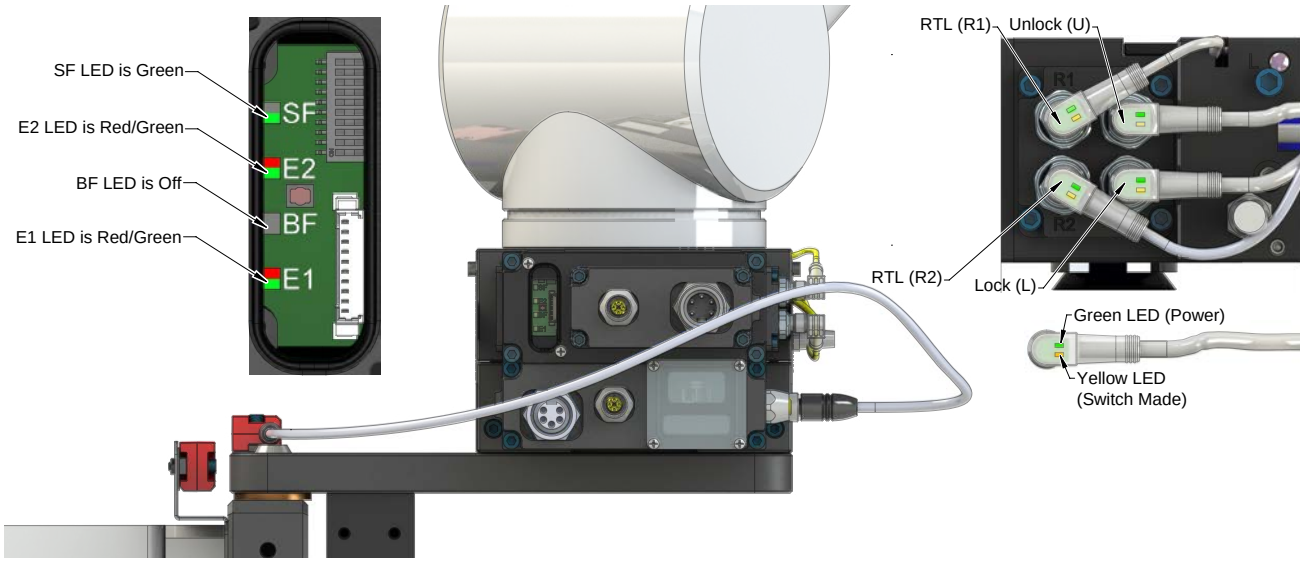

NOTICE: If the LEDs don't match what is shown, refer to *Section 2.1.2—System Failure (SF) and Bus Failure (BF) LEDs* or *Section 2.1.3—Ethernet 1 and Ethernet 2 LEDs* for possible issues.

5. Couple the Tool Changer.

   a. If ON, turn the **Unlatch** output OFF and turn the **Latch** output ON. (Note: Even for units with single solenoids the **Latch** output must be turned ON.)

   b. With the **Latch** output ON, power is available on the Tool and the **Tool Power is ON** input turns ON.

   c. The **Unlocked** input turns OFF and a short time later the **Locked** input turns ON and remains ON, indicating that the Tool Changer locking mechanism latch operation is complete. After the **Locked** input turns ON, the **Latch** output can be turned OFF.

   d. Sometime thereafter, communications should be established with the downstream PROFINET device(s). (The time it takes to establish connection with a downstream PROFINET node depends on the power up and reconnect time of the individual PROFINET equipment that is installed on the Tool.)

Figure 4.6—Master Coupled with Tool Moves Out of the Stand

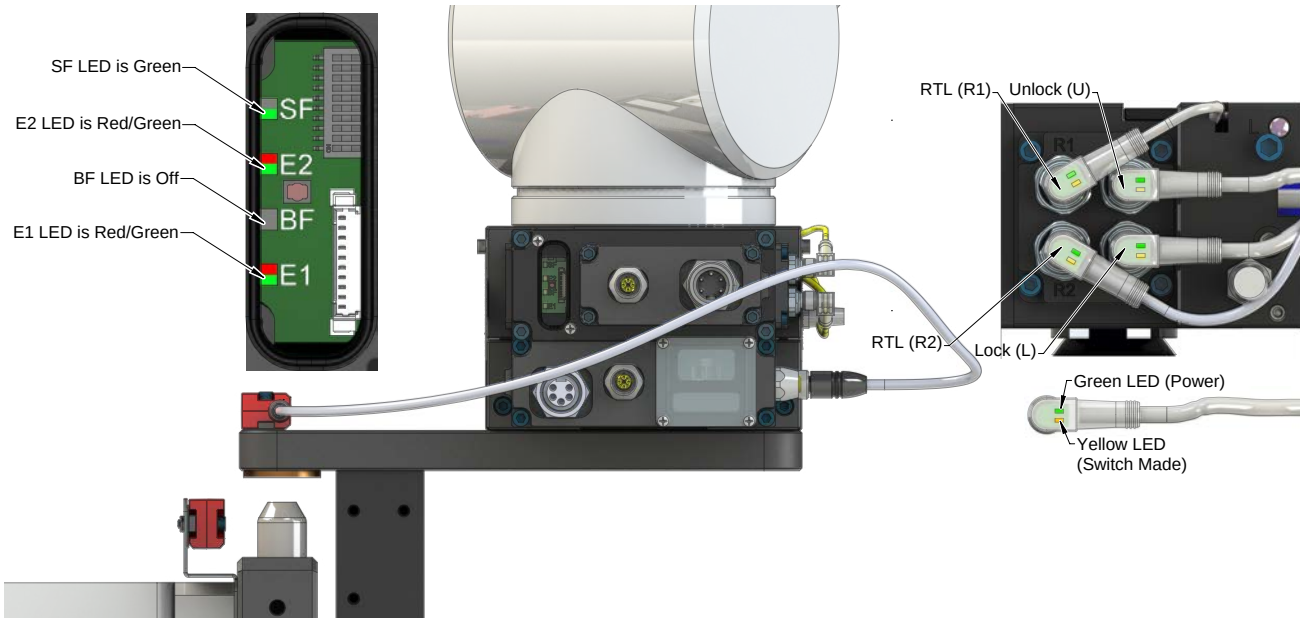

NOTICE: If the LEDs don't match what is shown, refer to *Section 2.1.2—System Failure (SF) and Bus Failure (BF) LEDs* or *Section 2.1.3—Ethernet 1 and Ethernet 2 LEDs* for possible issues.

6. The robot moves away from the tool stand with the Tool Changer coupled.
   a. The **TSI Limit Switch** is deactivated, and the **TSIV** and **TSRV** input goes OFF.
   b. The **Unlatch Enabled** turns OFF.
7. Normal operation.
   a. The following inputs are ON:
      ii. **Locked**
      iii. **Input/Logic Power Good**
      iv. **Output Power Available**
      v. **RTL1** and **RTL2**
      vi. **Tool Present**
      vii. **Tool Power is On**
      viii. **RTLV1** and **RTLV2**
      ix. **Tool-ID**
   b. The following inputs are OFF:
      i. **Unlocked**
      ii. **TSRV**
      iii. **TSIV**
      iv. **Unlatch Enabled**

NOTICE: The **Latch** output can be turned OFF, after the Locked input indicates the Tool Changer is in the locked state.

   c. The following output is OFF:
      i. **Unlatch**
      ii. **Latch**

Figure 4.7—Master Coupled with Tool Returned to Stand

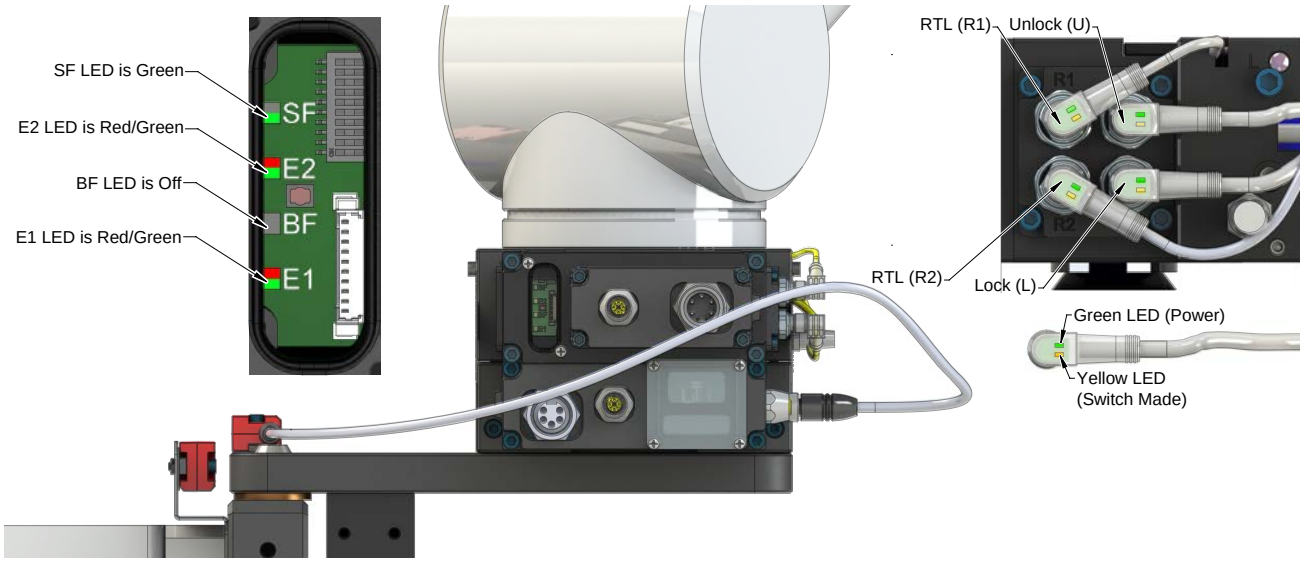

NOTICE: If the LEDs don't match what is shown, refer to *Section 2.1.2—System Failure (SF) and Bus Failure (BF) LEDs* or *Section 2.1.3—Ethernet 1 and Ethernet 2 LEDs* for possible issues.

8. The robot moves into the tool stand with the Tool Changer coupled.
   a. When the tool is returned to the stand, the **TSI Limit Switch** is activated and the **TSIV** and **TSRV** inputs goes ON.
   b. The **Unlatch Enabled** is ON, indicating that it is safe to uncouple the Tool Changer.
9. Uncouple the Tool Changer.
   a. If ON, turn the **Latch** output OFF and turn the **Unlatch** output ON.
   b. The **Tool Power is ON** input is OFF and the power on the Tool turns off.
   c. Communication is lost with downstream device(s).
   d. The **Locked** input turns OFF and a short time later the **Unlocked** input turns ON and remains ON, indicating that the Tool Changer locking mechanism unlatch operation is complete. For units with double solenoid valves, after the **Unlocked** input turns ON, the **Unlatch** output can be turned OFF.

Figure 4.8—Master Uncoupled, Moves away from Tool and is parallel within 0.06” to 0.15”

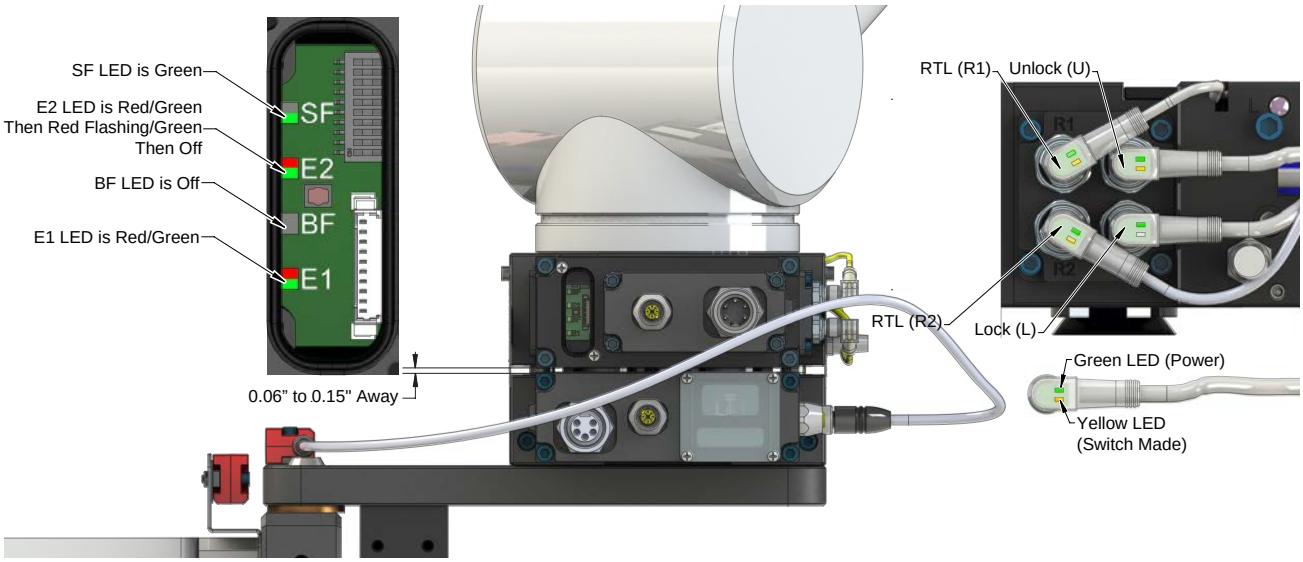

NOTICE: If the LEDs don’t match what is shown, refer to *Section 2.1.2—System Failure (SF) and Bus Failure (BF) LEDs* or *Section 2.1.3—Ethernet 1 and Ethernet 2 LEDs* for possible issues.

10. The robot and Master move away from the tool, are parallel and between 0.06” to 0.15” of the Tool.
    a. The **Tool Present** and **TSIV** and **TSRV** inputs turn OFF.
    b. The **Tool-ID** is unavailable (all 1>0xFFFF).
11. The Robot and Master are in free space.
    a. The following inputs are ON:
        i. **Unlocked**
        ii. **Unlatch Enabled**
        iii. **Input/Logic Power Good**
        iv. **Output Power Available**
    b. The following inputs are OFF:
        i. **Locked**
        ii. **RTLV1** and **RTLV2**
        iii. **Tool Present**
        iv. **RTL1** and **RTL2**
        v. **TSRV**
        vi. **TSIV**
        vii. **Tool-ID** invalid (all 1>0xFFFF)
    c. The following output is ON:
        i. **Unlatch**

NOTICE: For units with a single solenoid valve, the **Unlatch** output must remain ON. For units with a double solenoid valve, the **Unlatch** output can be turned OFF, after the **Unlocked** input indicates the Tool Changer is in an unlocked state.

    d. The following output is OFF:
        i. **Latch**

5. Maintenance

The modules are not designed to be field serviced as all point-to-point wiring connections are soldered. Component replacement is limited to the V-ring seal on the Master.

WARNING: Do not perform maintenance or repair(s) on the Tool Changer or modules unless the Tool is safely supported or placed in the tool stand, all energized circuits (e.g. electrical, air, water, etc.) are turned off, pressurized connections are purged and power is discharged from circuits in accordance with the customer's safety practices and policies. Injury or equipment damage can occur with the Tool not placed and energized circuits on. Place the Tool in the tool stand, turn off and discharge all energized circuits, purge all pressurized connections, and verify all circuits are de-energized before performing maintenance or repair(s) on the Tool Changer or modules.

If the Tool Changer is used in dirty environments (e.g., welding or deburring applications), limit the exposure of the Tool Changer. Idle Tool assemblies should be covered to prevent debris from settling on the mating surface. Also, the Master assembly should be exposed for only a short period of time during Tool change and down time.

Under normal conditions, no special maintenance is necessary; however, perform periodic inspections to assess for unexpected damage and assure long-lasting performance. Perform the following visual inspection monthly:

- Inspect mounting fasteners to verify they are tight and if loose, then tighten to the proper torque. Refer to *Section 3—Installation*.
- Cable connections should be inspected during maintenance periods to ensure they are secure. Loose connections should be cleaned and re-tightened as appropriate. Inspect cable sheathing for damage, repair or replace damaged cabling. Loose connections or damaged cabling are not expected and may indicate improper routing and/or strain relieving.
- Inspect the Master and Tool pin blocks for any pin damage, debris, or darkened pins. Refer to *Section 5.1—Pin Block Inspection and Cleaning*.
- Inspect V-ring seals for wear, abrasion, and cuts. If worn or damaged, replace. Refer to *Section 6.2.1—Seal Replacement*.

5.1 Pin Block Inspection and Cleaning

Tools required: *Nylon Brush (ATI Part Number 3690-0000064-60)*

1. Place the Tool in a secure location.
2. Uncouple the Master and Tool plates.
3. Turn off and de-energize all energized circuits (e.g. electrical, air, water, etc.).
4. Inspect the Master and Tool pin blocks for any debris or darkened pins.

Figure 5.1—Inspect Master and Tool Pin Blocks



5. If debris or darkened pins exist, remove debris using a vacuum and clean using a nylon brush (ATI Part Number 3690-0000064-60).

NOTICE: Do not use an abrasive media, cleaners, or solvents to clean the contact pins. Using abrasive media, cleaners, or solvents will cause damage to the contact surface or cause pins to stick. Clean contact surfaces with a vacuum or non-abrasive media such as a nylon brush (ATI Part Number 3690-0000064-60)

Figure 5.2—Clean Pin Blocks with a Nylon Brush

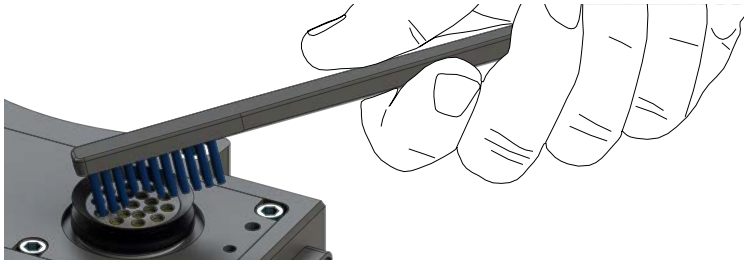

6. Inspect the Master and Tool pin blocks for stuck pins or pin block damage.

Figure 5.3—Stuck Pin and Pin Block Damage

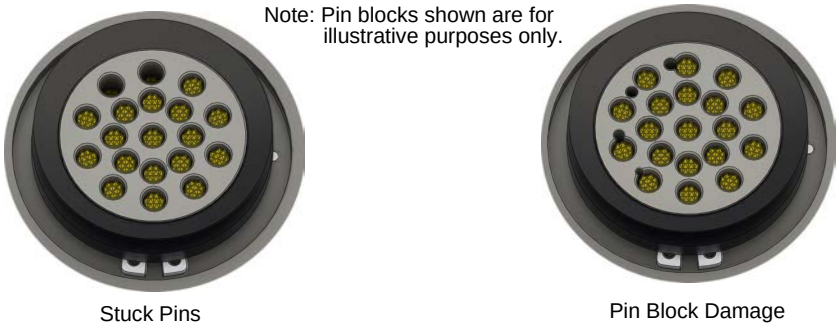

7. If stuck pins or pin block damage exists, contact ATI for possible pin replacement procedures or module replacement.
8. After the procedure is complete, resume normal operation.

6. Troubleshooting and Service Procedures

The following section provides troubleshooting information to help diagnose conditions with the Tool Changer or Utility Coupler and service procedures to help resolve these conditions.

WARNING: Do not perform maintenance or repair(s) on the Tool Changer or modules unless the Tool is safely supported or placed in the tool stand, all energized circuits (e.g. electrical, air, water, etc.) are turned off, pressurized connections are purged and power is discharged from circuits in accordance with the customer's safety practices and policies. Injury or equipment damage can occur with the Tool not placed and energized circuits on. Place the Tool in the tool stand, turn off and discharge all energized circuits, purge all pressurized connections, and verify all circuits are de-energized before performing maintenance or repair(s) on the Tool Changer or modules.

6.1 Troubleshooting

Refer to the following table for troubleshooting information.

Table 6.1—Troubleshooting

Symptom	Possible Cause	Correction
Unit will not lock or unlock	Debris caught between the Master and Tool plates.	Clean debris from between Master and Tool plates. Verify mounting fasteners is secure and does not protrude above the mating surfaces.
	Ball bearings are not moving freely.	Verify that ball bearings are moving freely. Clean and lubricate as needed. *Refer to the Maintenance section of the Tool Changer manual for instructions.*
	Air supply not to specifications.	Check air supply. *Refer to Pneumatic Connection section of the Tool Changer Manual for specifications.*
	Exhaust port is not properly vented.	Check that exhaust port is properly vented. *Refer to Pneumatic Connection section of the Tool Changer Manual for valve requirements.*
	Incorrect valve operation.	Check valve for proper operation. *Refer to Pneumatic Connection section of the Base Tool Changer Manual for valve requirements.*
	Signals are mapped incorrectly.	Verify that signals are mapped and are communicating properly. Refer to *Section 9—Drawings* for electrical schematic.
	Master and Tool are within the specified No-Touch zone.	Verify that the Master and Tool are within the specified No-Touch zone when attempting to lock. *Refer to the Operation Section of the Tool Changer manual for specifications.*
Sensors not operating properly (but PROFINET is operating correctly).	Sensor cables damage or incorrectly connected.	Verify that cables are connected correctly and not damaged, replace if damaged. *Refer to the Troubleshooting Section of the Tool Changer manual.*
	Sensors are not set correctly.	Verify that the sensors are set correctly. *Refer to the Troubleshooting Section of the Tool Changer manual.*
	Tool plate is not secured properly or debris is trapped between surfaces.	Ensure that the Tool plate is securely held to the Master plate, that nothing is trapped between their surfaces.
	Air trapped in the unlock (U) air port.	Ensure that there is no air trapped in the Unlock (U) air port. *Refer to Pneumatic Connection section of the Tool Changer Manual for valve requirements.*
Loss of communication	Contaminated or loose cable connections.	Ensure all cable connections are clean and tight.
	Damaged signal cabling	Check/replace signal cabling upstream and downstream of Tool Changer modules.
	Worn or damaged contact pins	Inspect module contact pins for debris/wear/damage. Contact ATI for contact pin replacement.
	Product upstream and downstream of Tool Changer failed or damaged	Check product upstream and downstream of Tool Changer for failure. This failure can "appear" to be caused by the Tool Changer or affect Tool Changer performance.

Table 6.1—Troubleshooting		
Symptom	**Possible Cause**	**Correction**
No power on the Tool side	Latch command not issued	Verify that the Latch command has been issued.
	The Tool Power is On bit is OFF.	Verify that the **Tool Power is On** bit is **ON**.
	The Tool Present bit is OFF.	Verify that the **Tool Present** bit is **ON**.
Loss of auxiliary power on the Tool side	US1 power loss	Loss of US1 (Logic) power on the Master side will cause loss of US2 (Auxiliary) power to the Tool. The Arc Prevention Circuit relies on US1 power to operate. Restore US1 power to the Master to restore US2 power to the Tool.

6.2 Service Procedures

The following service procedures provide instructions for inspection, adjustment, test or replacement of components.

6.2.1 Seal Replacement

Parts required: *Refer to Section 9—Drawings.*

The seal protects the electrical connection between the Master and Tool module. If the seal becomes worn or damaged, it must be replaced.

1. Place the Tool in a secure location.
2. Uncouple the Master and Tool plates.
3. Turn off and de-energize all energized circuits (e.g. electrical, air, water, etc.).
4. To remove the existing seal, pinch the edge of the seal with your fingers and pull the seal away from the pin block on the Master.
5. To install a new seal, stretch the new seal over the shoulder of the pin block.
6. Push the seal hub down against the pin block using your finger tip.
7. After the procedure is complete, resume normal operation.

Figure 6.1—V-ring Seal Replacement

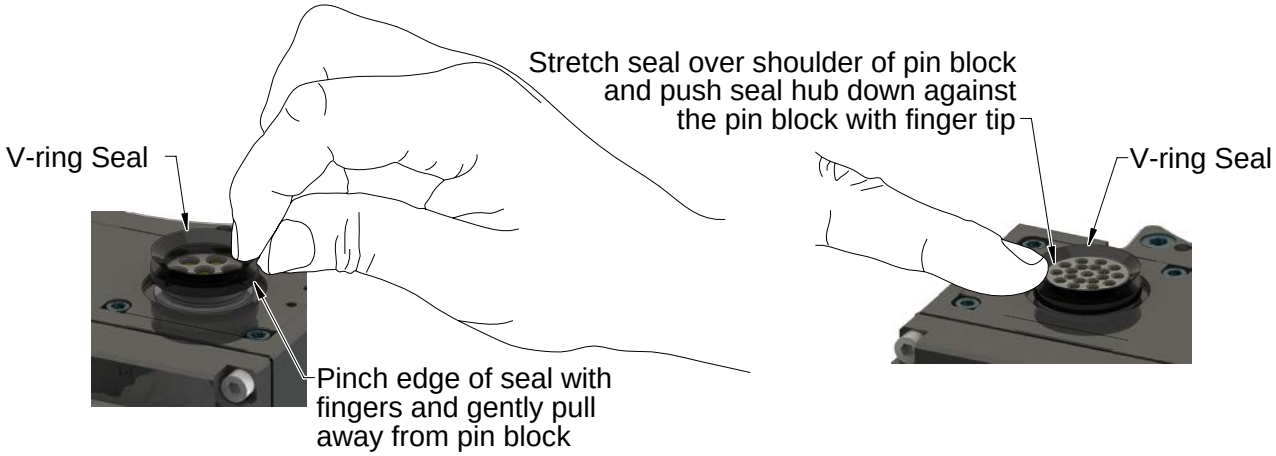

6.2.2 DL10 Device Replacement Procedures

The device replacement procedures are based on the following assumptions:

- The topology of the PROFINET network was properly defined with the PROFINET engineering tool.
- The PROFINET controller supports automatic device replacement.

6.2.2.1 Master Module Replacement Procedures

1. Remove the “old” module from the Tool Changer or Utility Coupler, refer to *Section 3.2—Master Control/Signal Module Removal* for removal procedure.
2. Install new module on Tool Changer, refer to *Section 3.1—Master Control/Signal Module Installation* for installation procedure.

6.2.2.2 Replace a Master Module with an Already Commissioned Master Module

Tools required: *5 mm Allen wrench, Phillips head screw driver, plastic stylus*

Supplies required: *Clean rag, Loctite 242*

1. Remove the “old” module from the Tool Changer or Utility Coupler, refer to *Section 3.2—Master Control/Signal Module Removal* for removal procedure.
2. Clean the mounting surfaces.
3. Using the ledge feature, place the Master control/signal module on the valve adapter mounting surface. Align the control/signal module with the valve adapter using the dowels in the bottom of the ledge feature.
4. Apply Loctite 242 to the (2) M6 socket head cap screws.
5. Install the (2) M6 socket head screws securing the control/signal module to the valve adapter and tighten to 70 in-lbs (7.9 Nm) using a 5 mm Allen wrench.

6. Connect the RTL1, RTL2, Lock, and Unlock sensor cables to the connectors on the Master module.
7. Connect the power cable to the connector on the Master module.
8. Connect the ground to the grounding terminal.

Figure 6.2—Master Module Installation

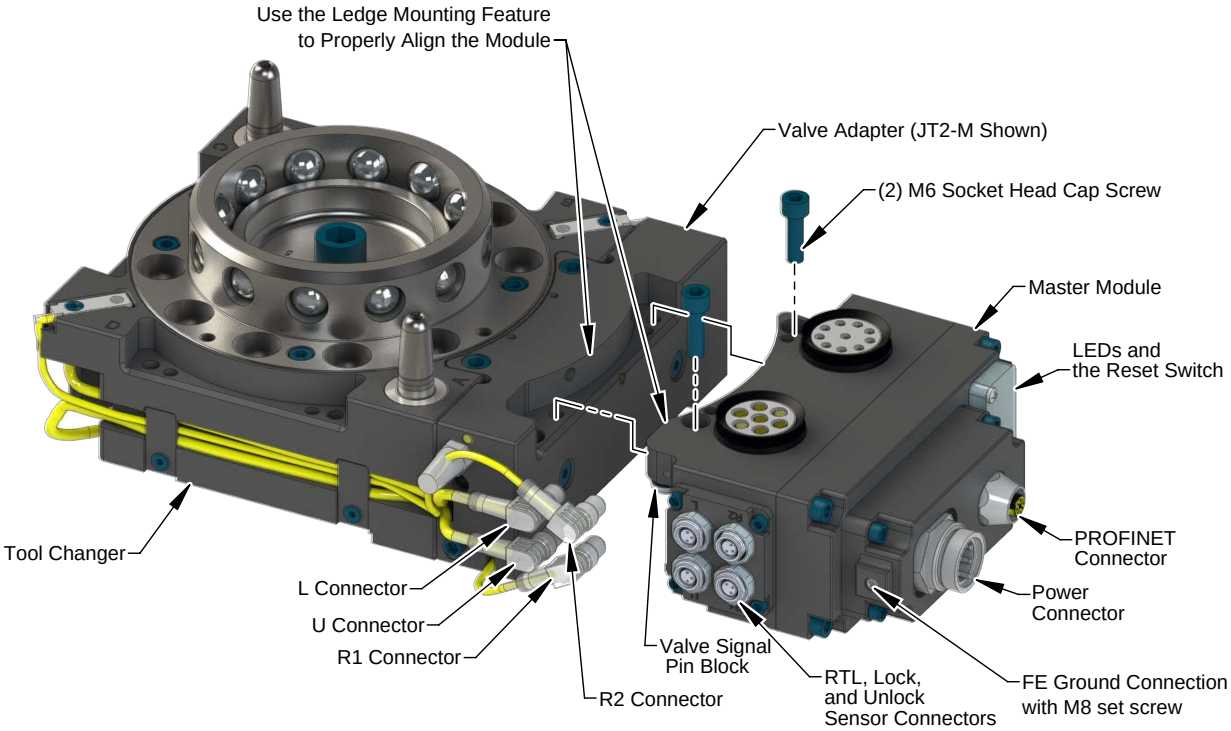

9. Loosen (2) M3 captive head screws using a Phillips head screwdriver and remove LED window.
10. Locate Reset button between BF and E2 LED.
11. Use a non-conductive tool (e.g. plastic stylus) to press on the Reset Button -> the SF LED will change from GREEN to blinking RED, indicating that the DL10-M module will clear its name and IP address after the next power-cycle.
12. Re-install the window and tighten the (2) M3 pan head captive screws using a Phillips head screwdriver.

Figure 6.3—Reset Button

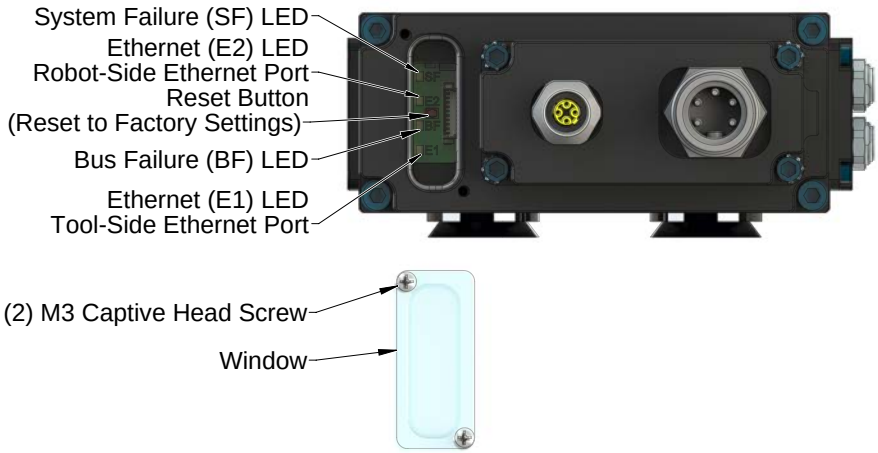

13. The new module may be found using the default PROFINET station name and configured to the appropriate station name for your application, or the network controller may be configured to automatically rename the module when it detects the default name.
14. Disconnect the 5-pin power cable to the Master module.
15. Connect the M12 Ethernet cable and the 5-pin power cable to the connectors on the Master module.

NOTICE: Within a few seconds after configuring, the Master module is operating on the network. The SF and BF LEDs are GREEN, when the network is operating without errors. Refer to *Section 2.4—Tool Side TSI*.

16. After repair is complete, return all circuits to normal operation (e.g. electrical, air, water, etc.).

7. Serviceable Parts

Refer to *Section 9—Drawings* for additional serviceable parts that are not listed in the following tables.

7.1 Master Module Serviceable Parts

Table 7.1—Master Module Mounting Fasteners		
Part Number	**Qty**	**Description**
3500-1066020-21A	2	M6 x 20 Socket Head Cap Screw, SS, ND Microspheres, 0-3 uncoated lead threads. 5-7 coated threads. IFI525

7.2 Tool Module Serviceable Parts

Table 7.2—Tool Module Mounting Fasteners		
Part Number	**Qty**	**Description**
3500-1066016-21A	2	M6 x 16 Socket Head Cap Screw, DIN 912 A4 S/S (316) ND Ind. Microspheres Epoxy, Yellow. 0-3 uncoated lead threads. 5-7 coated threads.

7.3 Accessories

Table 7.3—Accessories	
Part Number	**Description**
3690-0000064-60	Brush, Blue Nylon All Purpose (Contact Pin Cleaning)
9121-PLD-PLUG	TSI Teach Plug for the DL15 Tool
9120-DC45-Plug	TSI Teach Plug for the DL10 Tool
9120-C-4EM-4EF	TSI Cable (for 4-Pin Connector) DL10 Tool
3690-0000049-00	Closure Cap for Female Mini receptacles

8. Specifications

Table 8.1—DL10 Master Specifications	
9121-DL10-M	PROFINET Master module with integrated Ethernet switch, D-Coded 4-Pin M12 connector for PROFINET communication, 5-Pin Mini Connector for US1 and US2 power, TSI on the Tool, Arc Prevention applied to US1 and US2 power. Lock, Unlock, and RTL sensing with LED cables on the Master. Tool ID from the Tool module also supported. Mates with DL10-T and DL15-T
Connector(s)	(1) 5-Pin male Mini-Fast Connector for auxiliary power (1) 4-Pin female M12 D-Coded Connector for PROFINET (4) 3-Pin female M8 Connector supporting Tool Changer Locked, Unlocked, and Ready-to-Lock Proximity sensor in series (1) 3-Pin female M8 Connector for Valve
Electrical Rating	Power: 9 A • US1: 30 V max, if used with the DL10-T. • US1: 20.4 V to 27.6 V, if used with the DL15-T (limited by the safety switch). • US2: 20.4 V to 29 V (limited by the valve) for DL10-T and DL15-T. Note: The power source for input and output power must be capable of outputting an operating voltage that is overcurrent protected and regulated. Signal: 3 A, 30 VDC maximum
Current Draw	US1 Power: 220 mA @ 24 VDC: Master and Tool with Locked, RTL1, and RTL2 sensors “on” and Limit Switches/ TSI Circuits made, i.e. TSIV and TSRV “on”. US2 Power: 250 mA @ 24 VDC (Solenoid Valve).
Enclosure	IP65
Weight	2.23 lbs (1.01 kg)

Table 8.2—DL10 Tool Specifications	
9121-DL10-T	PROFINET Tool module provides one Ethernet port and supports Tool-ID through the Master module. D-Coded 4-Pin M12 connector for PROFINET communication, 5-Pin Mini Connector for US1 and US2 power, 4-pin M12 connector for TSI switch, Tool-ID 0-99999 adjustable with thumbwheel switches. Supports Arc Prevention on the Master. Mates with DL10-M.
Connector(s)	(1) 5-Pin female Mini-Fast Connector for auxiliary power (1) 4-Pin female M12 D-Coded Connector for PROFINET (1) 4-Pin female M12 Connector for TSI
Electrical Rating	US1+ and US2+ Power: 9 A, 12 to 30 VDC Signal: 2 A, 30 VDC maximum
Tool-ID	(5) Push-button switch reading 0–9 positions (00000-99999).
Enclosure	IP65
Weight	1.42 lbs (0.64 kg)

Table 8.3—DL15 Tool Specifications	
9121-DL15-T	PROFINET Tool module provides one Ethernet port and supports Tool-ID through the Master module. D-Coded 4-Pin M12 connector for Profinet communication, 5-Pin Mini Connector for US1 and US2 power, M12 5-Pin Female Connector provided to support RFID Based TSI on Tool, Tool-ID 0-99999 adjustable with thumbwheel switches. Supports Arc Prevention on the Master. Mates with DL10-M.
Connector(s)	(1) 5-Pin female Mini-Fast Connector for auxiliary power (1) 4-Pin female M12 D-Coded Connector for PROFINET (1) 5-pin female M12 TSI connector for RFID based Safety Switch
Electrical Rating	US1+ and US2+ Power: 9 A, 12 to 30 VDC Signal: 2 A, 30 VDC maximum
Tool-ID	(5) Push-button switch reading 0–9 positions (00000-99999).
Weight	1.5 lbs (0.68 kg)

9. Drawings

Drawings are available on the *ATI website* or by contacting an ATI representative.