Table of Contents

C. Control and Signal Modules C-2
SC32—Control/Servo Module C-2
1. Product Overview C-2
1.1 SC32 Master C-2
1.2 SC25 Tool C-3
2. Product Information C-4
2.1 Tool Side TSI C-4
2.2 TSI Operational Function C-5
2.2.1 The Master is Free of the Stand and the Tool is in the Stand C-5
2.2.1.1 RTL Bypass Relay Circuit C-5
2.2.2 The Master is Coupled with the Tool and the Tool is in the Stand C-6
2.2.3 The Master is Coupled with the Tool and the Tool is Free of the Stand C-7
3. Installation C-8
3.1 Master Module Installation C-8
3.2 Master Module Removal C-9
3.3 Tool Module Installation C-10
3.4 Tool Module Removal C-10
3.5 Setting the Tool-ID on Tool Module C-11
4. Operation C-12
4.1 Lock, Unlock, and RTL Sensor Cable LED Behavior C-13
4.2 Recommended Sequence of Operations C-14
5. Maintenance C-16
5.1 Pin Block Inspection and Cleaning C-17
6. Troubleshooting and Service Procedures C-18
6.1 Troubleshooting Procedures C-18
6.1.1 Servo Module, Drive, or Motor Troubleshooting Procedure C-20
6.2 Service Procedures C-21
6.2.1 Seal Replacement C-21
7. Serviceable Parts C-22
7.1 Master Module Serviceable Parts C-22
7.2 Tool Module Serviceable Parts C-22
7.3 Accessories C-22
8. Specifications C-23
9. Drawings C-24

C. Control and Signal Modules

SC32—Control/Servo Module

1. Product Overview

The SC32 Discrete Control and Servo module is designed to provide control of the Tool Changer, pass electrical power and signal connections to a servomotor, and pass field bus data (DeviceNet®, Interbus®, etc.) to the end-of-arm tooling. The connectors on the SC32 module enable separate routing of power and signal cables. Power and signal circuits are electrically isolated both from each other and the Tool Changer. The wiring has EMI/RF shielding to protect it from noise.

NOTICE: The 0 and 24VDC supply lines are required to be on certain pin locations of the customer interface connector. Refer to *Section 9—Drawings* for pin out information and location of the I/O signals.

The Master pin blocks have compliant spring probes, and the Tool pin blocks have fixed contact pins (refer to *Figure 1.1*). When the Tool Changer is coupled, the Master transfers signals and power to the Tool through the pin blocks, which are surrounded by V-ring seals that are water resistant but not waterproof.

To avoid unintentional human contact, the Master spring pins are recessed below an insulated surface.

DANGER: This module has a voltage of 50V or greater; always remove power before contacting the module. Arcing and damage occur if power is not removed from the module during maintenance or service. Always remove power before attaching or disconnecting cables, separating or inserting the mating couplers, or making any contact with the Tool Changer or Utility Coupler.

CAUTION: Never couple or uncouple the servo modules unless electrical power has been disconnected and discharged both upstream and downstream from the modules. Arcing and contact damage occur during coupling or uncoupling if power is not removed and discharged. Always disconnect and discharge power from upstream and downstream of the modules before coupling or uncoupling.

In addition to the standard Lock, Unlock, and Ready-To-Lock sensor inputs, the modules have Tool Stand Interlock (TSI). The TSI feature consists primarily of a physical break in the unlatch solenoid valve circuit so that the Tool Changer ONLY releases the Tool in the stand or storage location. During operation, the RTLV input provides a means of monitoring the RTL relay for proper functionality during operation. Refer to *Section 4.2—Recommended Sequence of Operations* for additional information. The SC32 Master provides an RTL override circuit that allows the Tool Changer to be unlocked when there is no tool attached. Refer to *Section 2—Product Information* for additional information regarding TSI.

1.1 SC32 Master

The Master module is equipped with a Harting 10B connector assembly. The Harting connector assembly includes the following: an 8-pin male connector for power, a 25-pin male connector for encoder signal pass-through, and a 12-pin male connector for field bus signals, refer to *Section 9—Drawings* for additional information and connector details. If the customer is using Device Net bus signals, a terminating resistor can be connected to the 5-pin M12 female connector. Interface to the Tool Changer's integrated RTL, Lock, and Unlock sensors are provided through (4) M8, 3-pin connectors on the Master module. Refer to the specific Tool Changer manual for details on the operation of RTL, Lock, and Unlock sensors. The Lock, Unlock, and RTL cables are provided as an integrated part of the Tool Changer.

A 3-pin M8 female valve connector is provided for Latch/Unlatch control of the Tool Changer. This connector only supports double solenoid control valves, which can be supplied from ATI as part of the valve adapter (9121-JT5-M). Refer to the valve adapter manual for more information. Electrical interface drawings and connector details are provided in the drawings in *Section 9—Drawings*.

Figure 1.1—SC32 Master and SC25 Tool Modules

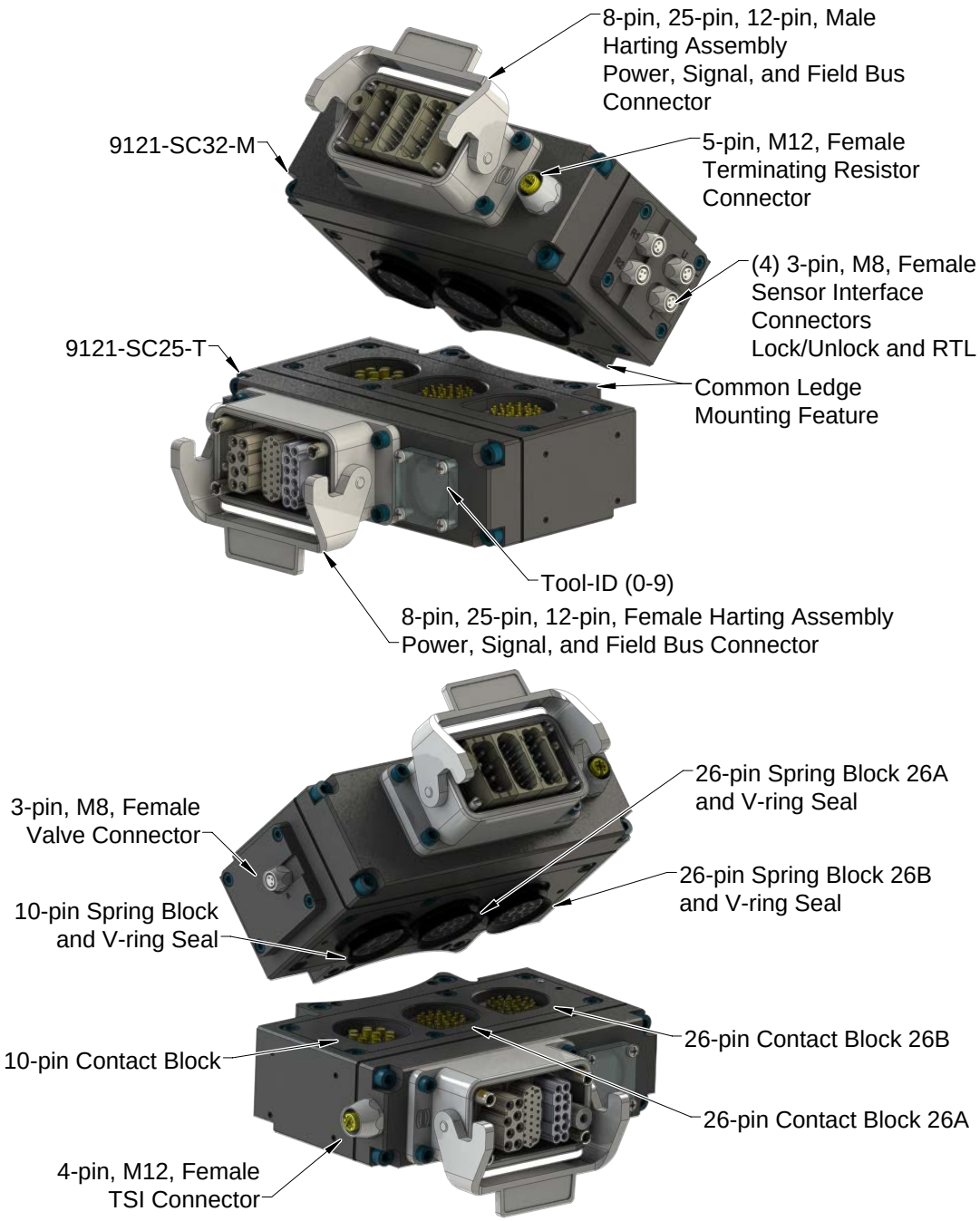

1.2 SC25 Tool

The Tool module is equipped with a Harting 10B connector assembly. The Harting connector assembly includes the following: an 8-pin female connector for power, a 25-pin female connector for encoder signal pass-through, and a 12-pin female connector for field bus signals. A 4-pin M12 female connector passes TSI signals. Refer to *Section 9—Drawings* for additional information and connector details.

The Tool-ID feature distinguishes between the different tools coupled by the Tool Changer. Using a push button feature, the user may set a maximum of (10) unique Tool-ID values (0-9). Refer to *Section 9—Drawings*, for more information. To set Tool-ID, refer to *Section 3.5—Setting the Tool-ID on Tool Module*.

2. Product Information

This section provides more detailed information on the behavior of the SC32 Master and SC25 Tool modules.

2.1 Tool Side TSI

To prevent an unintended Tool release, the electrical power to the unlatch valve circuit is switched ONLY when the Tool mounted limit switch indicates that the Tool is nested safely in the tool stand. The limit switch ensures that the Tool Changer Master releases the Tool in the tool stand (refer to *Figure 2.1*). If an Unlatch command is given and the Tool is not docked properly, the Unlatch command will not be recognized.

ATI recommends installation of a momentary action, normally open, single-pole, single-throw mechanical limit switch to work with the TSI circuit. The limit switch must mount to the Tool in a manner that guarantees that the switch is closed only when the Tool is nested in the tool stand (see *Figure 2.2* and *Figure 2.4*). The limit switch is connected to the SC25 Tool module via a 4-pin M12 female connector.

A teach plug is available to override the TSI safety feature during initial setup and maintenance situations.

For more information on the safety circuitry, refer to *Figure 2.2* and *Figure 2.4*.

Figure 2.1—Tool Stand Interlock (TSI)

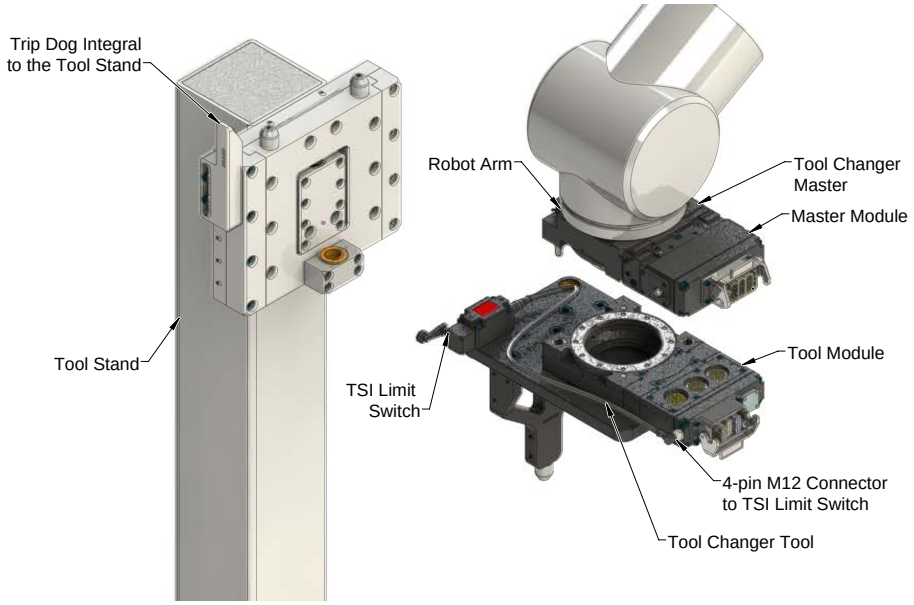

CAUTION: The Master locking mechanism must be fully retracted prior to the Master entering the Tool. Failure to do so will cause ball bearings to damage the Tool bearing race.

2.2 TSI Operational Function

The TSI system provides safe operation, by preventing the Tool Changer from unintentionally unlocking when the Tool is attached and not secured in the tool stand. The following sections describe the Tool Changer states and how the TSI system controls the unintentional unlocking of the Tool Changer.

2.2.1 The Master is Free of the Stand and the Tool is in the Stand

The Master is away from the tool stand, and the Tool is nested safely in the tool stand. Since the Master and Tool are not coupled, as indicated by the RTL sensors, the unlatch command can still be executed through the RTL bypass circuit.

2.2.1.1 RTL Bypass Relay Circuit

The SC32 Master module has an RTL bypass relay that is normally closed. If the Tool Changer is inadvertently locked without a Tool attached, the Tool Changer can still be safely unlocked electronically since no Tool is present.

Figure 2.2—TSI Circuit with Master Free of Stand, Tool in the Stand

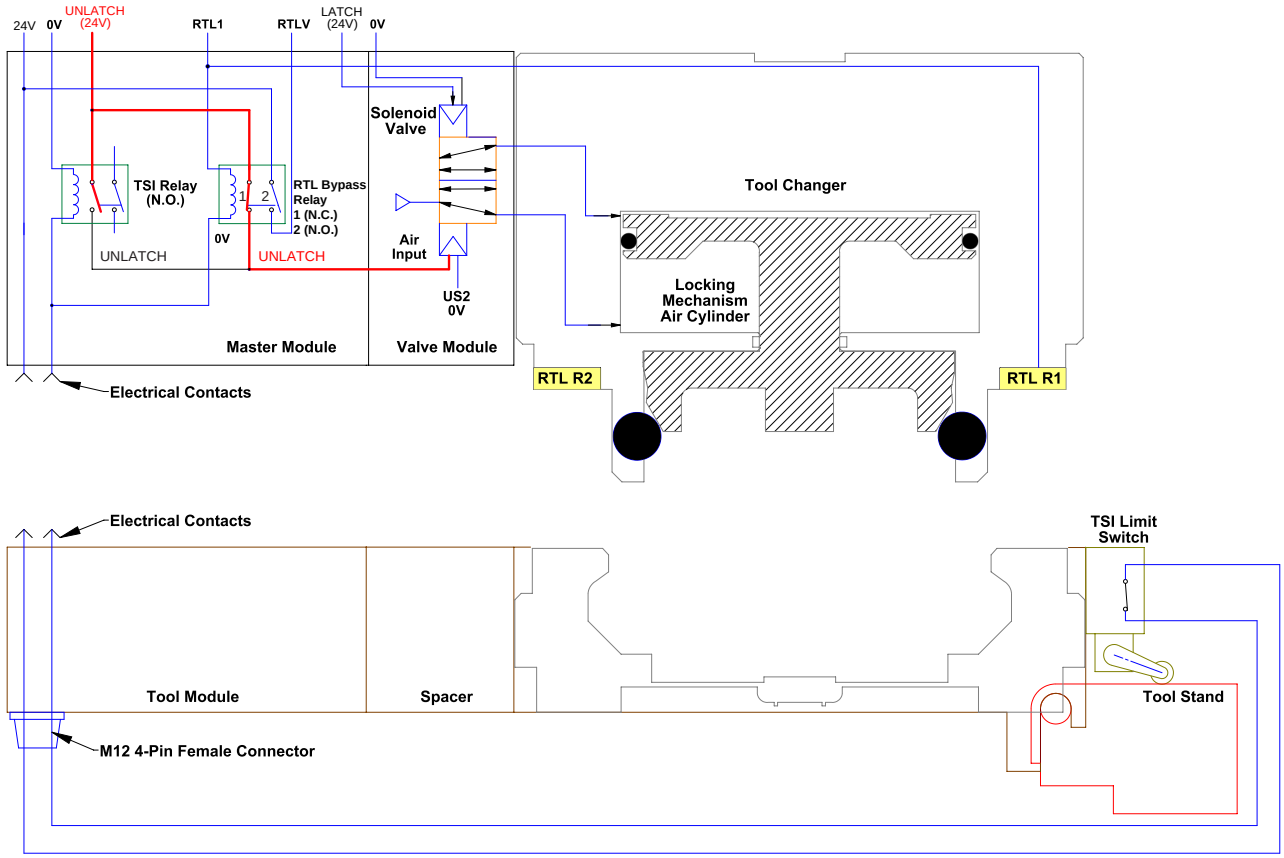

The second set of contacts on the RTL bypass relay is used to provide the RTLV diagnostic signal (when the RTL bypass relay is open, the RTLV signal should be off). The RTLV signal can indicate if the RTL bypass relay is operating properly.

Figure 2.3—Fault Monitoring			
RTL 1	**RTLV**	**Tool Presence**	**Comments**
OFF	OFF	ON [1]	RTL1 Not Operating Properly[2]
ON	ON	OFF [1]	
OFF	ON	OFF	Relay or RTL1 Not Operating Properly[2]
ON	OFF	ON	
ON	ON	ON	Operating Properly
OFF	OFF	OFF	

Notes:

1. Tool module present as evidenced by ability to read Tool-ID.
2. Dangerous situation where an unintentional Unlock command could result in Tool release.

2.2.2 The Master is Coupled with the Tool and the Tool is in the Stand

The Master and Tool are within coupling distance and the electrical contacts are touching. The TSI relay closes because the TSI limit switch is actuated and the electrical contacts are touching. It is now possible for the TSI relay to pass the unlatch signal from the robot to the solenoid valve. The RTL R1 sensor is ON, detects the tool presence and opens the RTL bypass relay, turning ON the RTLV signal. The unlatch signal can no longer pass through the RTL bypass relay.

Figure 2.4—TSI Circuit with Master and Tool Locked

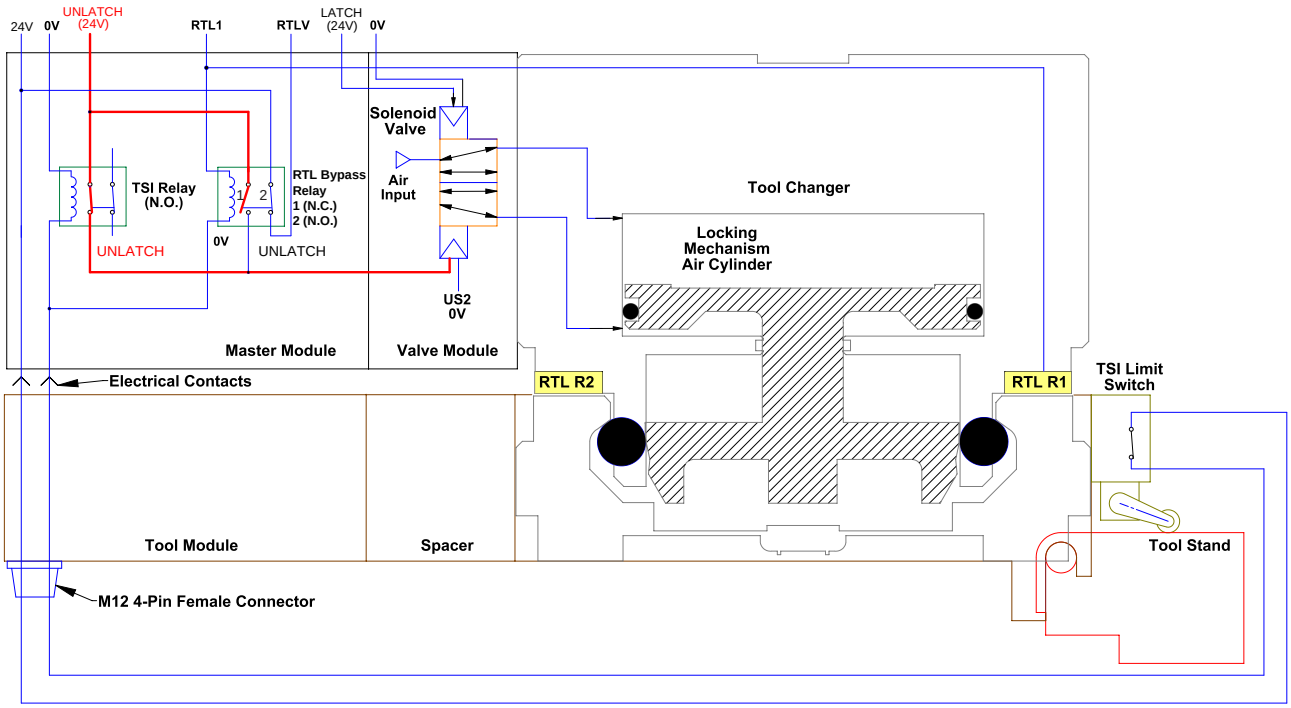

2.2.3 The Master is Coupled with the Tool and the Tool is Free of the Stand

The Master and Tool are coupled together and are free of the tool stand. The TSI limit switch (normally open) is not tripped and thus breaking the circuit in the TSI relay. The RTL R1 sensor is ON, detects the tool presence and opens the RTL bypass relay. Even if an unlatch command is sent, the Tool Changer will not unlock; it is not possible to close the TSI relay or turn the RTL R1 sensor ON and unlock the Tool Changer locking mechanism.

Figure 2.5—TSI Circuit with Master and Tool Locked (free of stand)

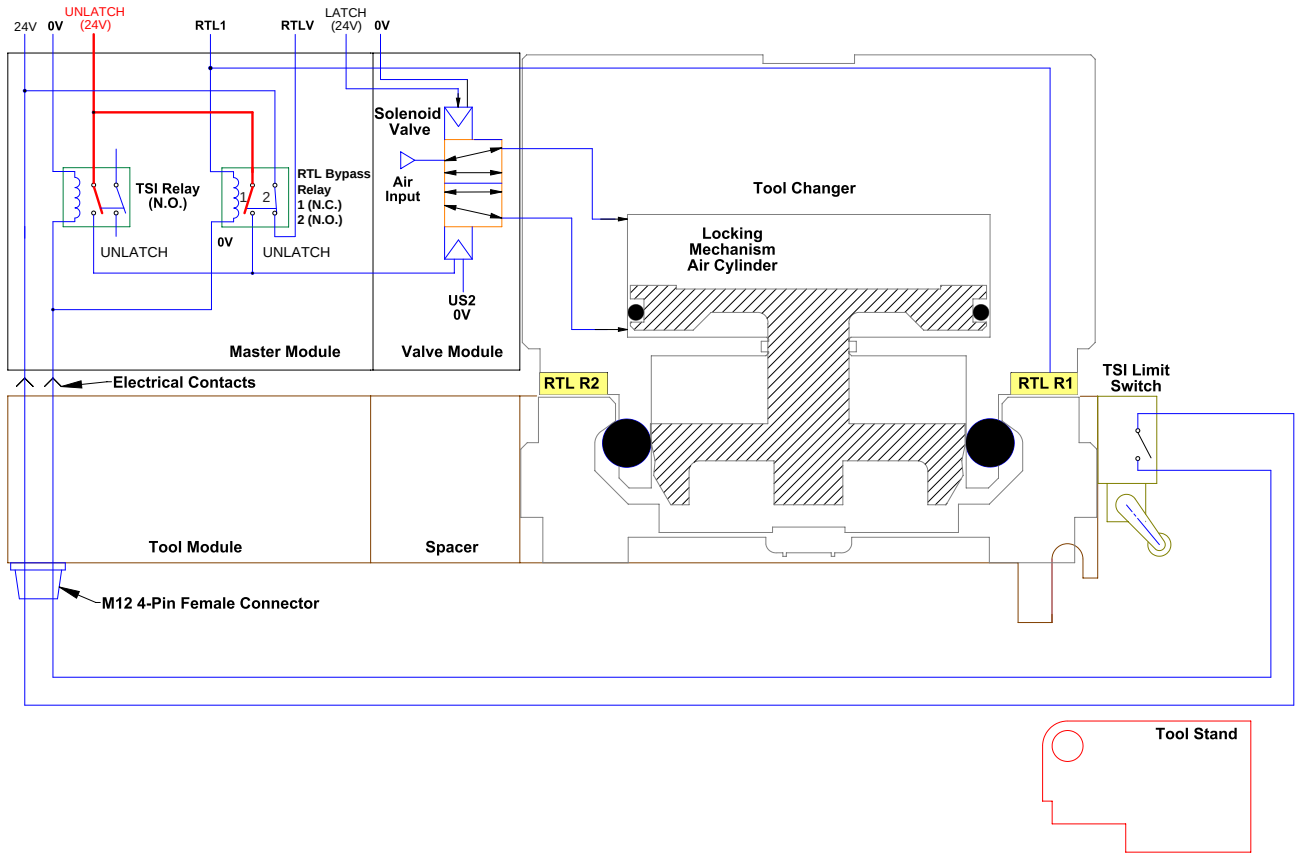

3. Installation

The control/signal modules are typically installed by ATI prior to shipment. The following procedure outline the field installation or removal as required. For wiring information refer to *Section 9—Drawings*.

DANGER: This module has a voltage of 50V or greater; always remove power before contacting the module. Arcing and damage occur if power is not removed from the module during maintenance or service. Always remove power before attaching or disconnecting cables, separating or inserting the mating couplers, or making any contact with the Tool Changer or Utility Coupler.

WARNING: Do not perform maintenance or repair(s) on the Tool Changer or modules unless the Tool is safely supported or placed in the tool stand, all energized circuits (for example: electrical, air, water, etc.) are turned off, pressurized connections are purged and power is discharged from circuits in accordance with the customer specific safety practices and policies. Injury or equipment damage can occur with the Tool not placed and energized circuits on. Place the Tool in the tool stand, turn off and discharge all energized circuits, purge all pressurized connections, and verify all circuits are de-energized before performing maintenance or repair(s) on the Tool Changer or modules.

CAUTION: Thread locker applied to fasteners must not be used more than once. Fasteners might become loose and cause equipment damage. Always apply new thread locker when reusing fasteners.

3.1 Master Module Installation

Tools required: *5 mm hex key, torque wrench*

Supplies required: *Clean rag, Loctite® 242*

1. Place the Tool in a secure location.
2. Uncouple the Master and Tool plates.
3. Turn off and de-energize all energized circuits (for example: electrical, pneumatic, and hydraulic circuits).
4. Clean mounting surfaces.
5. Place the module into the appropriate location on the valve adapter.
6. Apply Loctite 242 to the supplied M6 socket head cap screws. Install the (2) M6 socket head cap screws and secure the module to the valve adapter using a 5 mm hex key. Tighten to 70 in-lbs (7.9 N-m).
7. Ensure the Lock (L), Unlock (U), RTL (R1), and RTL (R2) connections are clean and connect the sensor cables to the control/signal module.
8. Ensure the valve connector is clean and connect the solenoid valve cable from the valve adapter to the valve connector on the control/signal module.
9. Ensure the power, signal, auxiliary, and other connectors are clean and connect the cables to the module.
10. Safely resume normal operation.

Figure 3.1—Module Installation

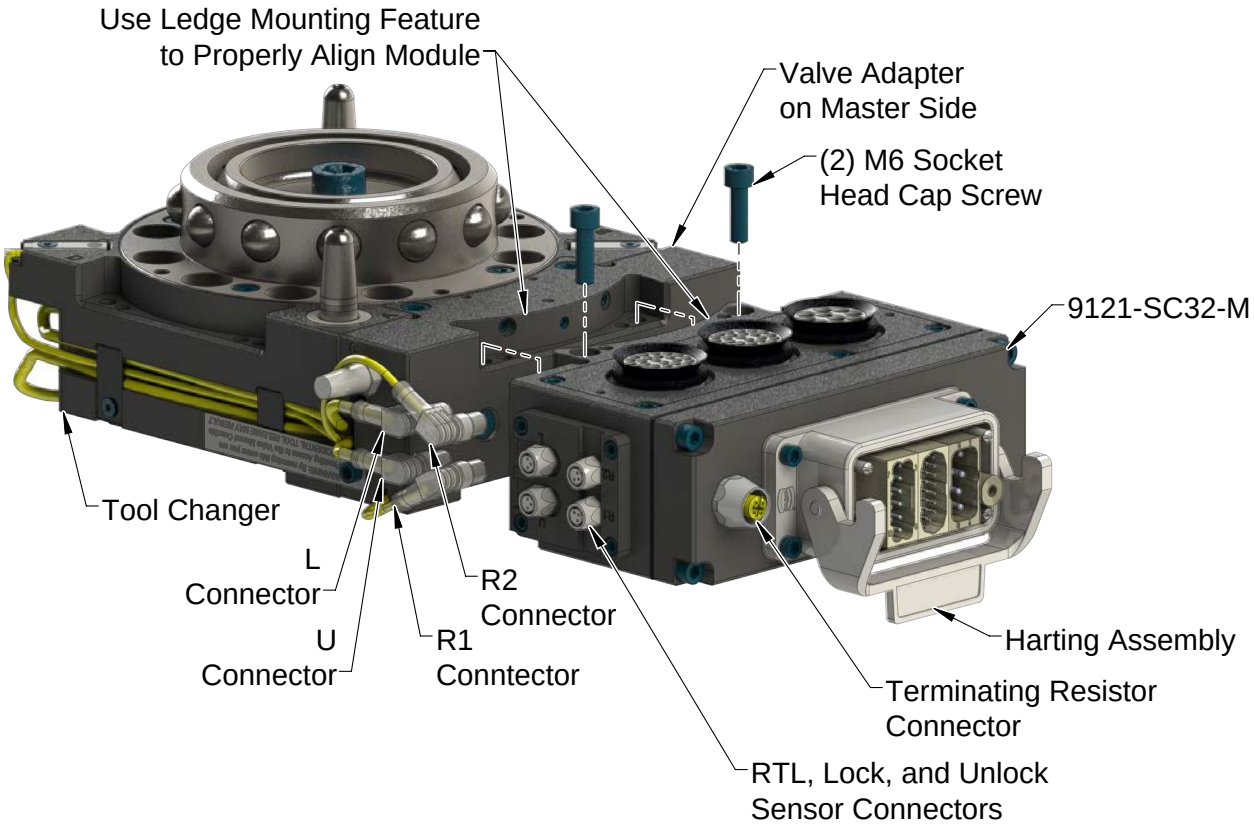

3.2 Master Module Removal

Tools required: *5 mm hex key*

1. Place the Tool in a secure location.
2. Uncouple the Master and Tool plates.
3. Turn off and de-energize all energized circuits (for example: electrical, pneumatic, and hydraulic circuits).
4. Mark the Lock, Unlock, and RTL sensor cables so that the cables can be reinstalled to the appropriate sensor.
5. Disconnect the Lock (L), Unlock (U), RTL (R1), and RTL (R2) sensor cable connectors from the module.
6. Disconnect the solenoid valve cable from the module.
7. Disconnect (for example: power, signal, auxiliary, etc.) cables from the control/signal module.
8. Support the control/signal module, remove the (2) M6 socket head cap screws using a 5 mm hex key, and lower the module until it clears the guide pin.

3.3 Tool Module Installation

Prior to installing the Tool module, set the Tool-ID to a unique value. Refer to *Section 3.5—Setting the Tool-ID on Tool Module*.

Tools required: *5 mm hex key, torque wrench*

Supplies required: *Clean rag, Loctite 242*

1. Place the Tool in a secure location.
2. Uncouple the Master and Tool plates.
3. Turn off and de-energize all energized circuits (for example: electrical, pneumatic, and hydraulic circuits).
4. Wipe down the mounting surfaces with a clean rag.
5. Place the module onto the air adapter or Tool plate.
6. Apply Loctite 242 to the supplied M6 socket head cap screws. Install the (2) M6 Socket Head Cap Screws and secure the module to the air adapter using a 5 mm hex key. Tighten to 70 in-lbs (7.9 Nm).
7. Ensure the power, signal, auxiliary, and other connectors are clean and connect the cables to the module.
8. Ensure the TSI limit switch connection is clean and connect the cable to the module.
9. Safely resume normal operation.

Figure 3.2—Module Installation

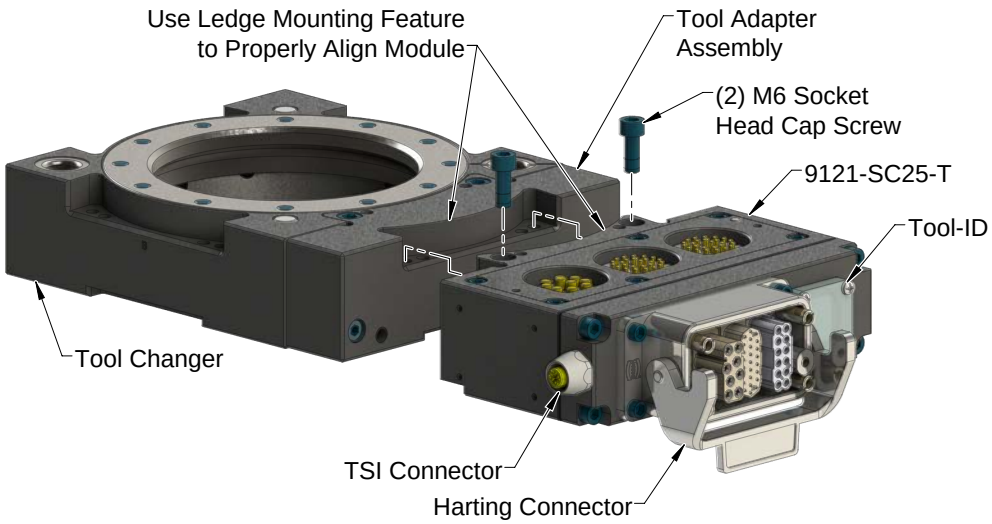

3.4 Tool Module Removal

Tools required: *5 mm hex key*

1. Place the Tool in a secure location.
2. Uncouple the Master and Tool plates.
3. Turn off and de-energize all energized circuits (for example: electrical, pneumatic, and hydraulic circuits).
4. Disconnect (for example: power, signal, auxiliary, etc.) cables from the control/signal module.
5. Disconnect the cable from the control/signal module to the TSI limit switch.
6. Support the control/signal module, remove the (2) M6 socket head cap screws using a 5 mm hex key, and lift the module from the valve adapter.

3.5 Setting the Tool-ID on Tool Module

Push button switches are provided on the Tool module for setting of a unique digit Tool-ID number.

Tools required: *Phillips head screw driver*

1. Loosen the (4) M3 Pan Head Captive Screws and remove the Tool-ID window.

Figure 3.3—Set Tool-ID

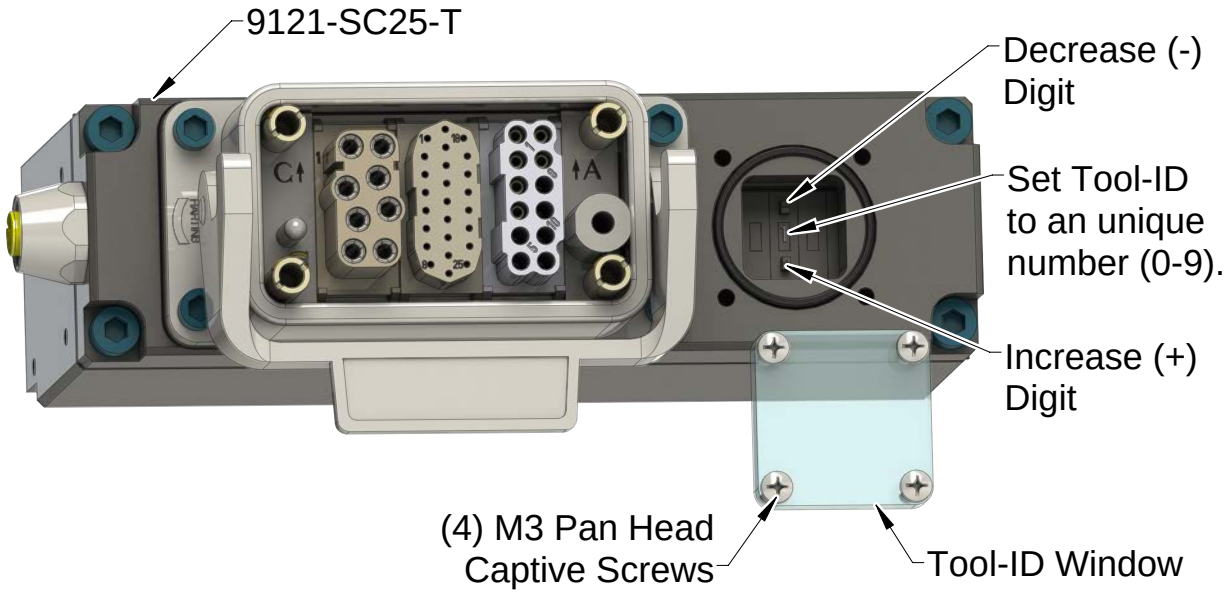

2. Use a non-conductive tool (for example: plastic stylus) to press on the Tool-ID push buttons to increase (+) or decrease (-) the digit value. Set the Tool-ID to the desired unique digit number. Refer to *Section 9—Drawings* for Tool-ID output tables.
3. Install the Tool-ID window and tighten the (4) M3 pan head captive screws.

4. Operation

The control/signal module is designed to provide control of the Tool Changer and pass electrical power, signals, and field bus data to the customer end-of-arm tooling . The SC32 is compatible with specific industrial servomotors and drives, providing a separable joint in the power and signal wiring. To maximize the service life of these components, the following points should be observed:

DANGER: This module has a voltage of 50V or greater; always remove power before contacting the module. Arcing and damage occur if power is not removed from the module during maintenance or service. Always remove power before attaching or disconnecting cables, separating or inserting the mating couplers, or making any contact with the Tool Changer or Utility Coupler.

CAUTION: Never couple or uncouple the servo modules unless electrical power has been disconnected and discharged both upstream and downstream from the modules. Arcing and contact damage occur during coupling or uncoupling if power is not removed and discharged. Always disconnect and discharge power from upstream and downstream of the modules before coupling or uncoupling.

CAUTION: Improper cable routing can result in wires and cables being pinched in the joint between the Tool Changer plates and premature failure of the electrical connectors. Properly route and secure all cables, particularly on the Master side.

The following sections detail the functional characteristics of the module.

NOTICE: The 0 and 24VDC supply lines are required to be on certain pin locations of the customer interface connector. Refer to *Section 9—Drawings* for pin out information and location of the I/O signals.

Refer to the specific Tool Changer manual for coupling conditions of the Tool Changer and *Section 4.2—Recommended Sequence of Operations*. When coupled, the module Tool can be communicated with, Tool-ID can be read (if equipped), and attached end-effectors can be used.

4.1 Lock, Unlock, and RTL Sensor Cable LED Behavior

The Lock, Unlock, and RTL sensor cables are equipped with two LEDs. The Green LED indicates the sensor has power and the yellow LED indicates the switch has been made. The LED behavior is affected by the control/signal module.

Table 4.1—Sensor Cable LED Behavior for Common Tool Changer Positions

Tool Changer Position	Sensor cable LED Behavior			
Unlocked (Tool Changer Master plate free of stand with no Tool plate attached)	RTL (R1) Sensor	ON OFF	ON ON	Unlock (U) Sensor
	RTL (R2) Sensor	ON OFF	ON OFF	Lock (L) Sensor
Ready to Lock (Tool Changer Master plate with Tool plate parallel and at a distance of 1.22 mm or less from each other)	RTL (R1) Sensor	ON ON	ON ON	Unlock (U) Sensor
	RTL (R2) Sensor	ON ON	ON OFF	Lock (L) Sensor
Locked (Tool Changer Master plate with Tool plate attached in fully locked position)	RTL (R1) Sensor	ON ON	ON OFF	Unlock (U) Sensor
	RTL (R2) Sensor	ON ON	ON ON	Lock (L) Sensor
Missed Tool (Tool Changer Master plate locked with no Tool plate attached)	RTL (R1) Sensor	ON OFF	ON OFF	Unlock (U) Sensor
	RTL (R2) Sensor	ON OFF	ON OFF	Lock (L) Sensor

Figure 4.1—Lock, Unlock, and RTL Sensor cable LED Behavior (Shown in Locked Position)

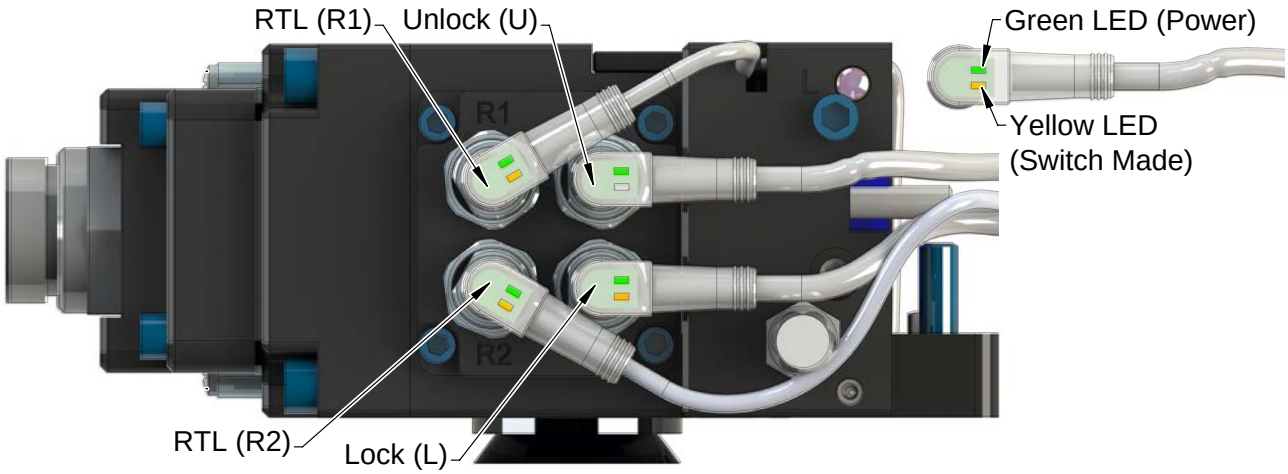

(Control module shown for reference only)

4.2 Recommended Sequence of Operations

This Recommended Sequence of Operations procedure is to be used as a general guide when programming a robot or PLC for use with a Tool Changer and control/signal modules. This procedure is intended for "automatic" modes used during normal application processes.

1. The robot and Tool Changer master are free of the stand or storage location, the Tool Changer is uncoupled, and the Tool changer locking mechanism is fully retracted (The **Unlocked** input is true, indicating that the Tool Changer locking mechanism is fully retracted). The Tool is in the tool stand.
    a. The **RTL1** and **RTL2** inputs are OFF.
    b. The **RTLV** input is OFF.
    c. The ATI Tool and any downstream device(s) are offline.
2. Ensure the Master is Unlocked (The Master must be unlocked prior to entering the Tool to prevent the ball bearings from impinging on the Tool bearing race.)
    a. Turn the **Latch** output OFF.
    b. Turn the **Unlatch** output ON.
    c. The **Unlocked** input turns ON a short time later and remains ON, indicating that the Tool changer locking mechanism is fully retracted.
3. Robot and Master move into the Tool and are parallel within 0.06" of the Tool (for example: the module contact pins are touching, the **RTL** sensors have sensed the targets on the Tool).
    a. The **RTLV** input is ON.
    b. The **RTL1** and **RTL2** inputs are on, indicating that the Tool can be coupled.
    c. 'Input' power connections become available on the Tool.
    d. Communications with downstream device(s) should now be established.
4. Coupling the Tool Changer.
    a. Turn the **Unlatch** output OFF.
    b. Turn the **Latch** output ON.
    c. The **Unlocked** input goes OFF a short time later, indicating piston travel. Subsequently, the **Locked** input goes ON and remains ON, indicating that the coupling operation is complete.
5. Robot moves away from the Tool Stand with the Tool Changer coupled.
6. Normal operation:
    a. The following inputs are ON:
        i. **Locked**
        ii. **RTL1**
        iii. **RTL2**
        iv. **RTLV**
    b. The following inputs are OFF:
        i. **Unlocked**
7. Robot moves into the Tool Stand with the Tool Changer coupled.

8. Uncoupling the Tool Changer. **IMPORTANT: It is critical that the Tool is nested securely in the Tool Stand prior to Uncoupling the Tool Changer.**
    a. Turn the **Latch** output OFF.
    b. Turn the **Unlatch** output ON.
    c. The **Locked** input goes OFF a short time later and subsequently the **Unlocked** input goes ON and remains ON, indicating that the uncoupling operation is complete.
9. Robot and Master move up and away and are at a distance greater than 0.125” from the Tool (the module contact pins are no longer touching).
    a. The **RTLV** input is OFF.
    b. The **RTL1** and **RTL2** inputs are OFF.
    c. ‘Input’ power connections become unavailable on the Tool.
    d. Communications with downstream device(s) should now be lost.
10. Robot and Master in free space.
    a. The following inputs are ON:
        i. **Unlocked**
    b. The following inputs are OFF:
        i. **Locked**
        ii. **RTL1**
        iii. **RTL2**
        iv. **RTLV**

5. Maintenance

The modules are not designed to be field serviced as all point-to-point wiring connections are soldered. Component replacement is limited to the V-ring seal on the Master.



DANGER: This module has a voltage of 50V or greater; always remove power before contacting the module. Arcing and damage occur if power is not removed from the module during maintenance or service. Always remove power before attaching or disconnecting cables, separating or inserting the mating couplers, or making any contact with the Tool Changer or Utility Coupler.



WARNING: Do not perform maintenance or repair(s) on the Tool Changer or modules unless the Tool is safely supported or placed in the tool stand, all energized circuits (for example: electrical, air, water, etc.) are turned off, pressurized connections are purged and power is discharged from circuits in accordance with the customer specific safety practices and policies. Injury or equipment damage can occur with the Tool not placed and energized circuits on. Place the Tool in the tool stand, turn off and discharge all energized circuits, purge all pressurized connections, and verify all circuits are de-energized before performing maintenance or repair(s) on the Tool Changer or modules.

If the Tool Changer is used in dirty environments (for example: welding or deburring applications), limit the exposure of the Tool Changer. Idle Tool assemblies should be covered to prevent debris from settling on the mating surface. Also, the Master assembly should be exposed for only a short period of time during Tool change and down time.

Under normal conditions, no special maintenance is necessary; however, perform periodic inspections to assess for unexpected damage and assure long-lasting performance. Perform the following visual inspection monthly:

- Inspect mounting fasteners to verify they are tight; and if loose, then tighten to the proper torque. Refer to *Section 3—Installation.*
- Cable connections should be inspected during maintenance periods to ensure they are secure. Loose connections should be cleaned and tightened as appropriate. Inspect cable sheathing for damage, repair or replace damaged cabling. Loose connections or damaged cabling are not expected and may indicate improper routing and/or strain relieving.
- Inspect the Master and Tool pin blocks for any pin damage, debris or darkened pins. Refer to *Section 5.1—Pin Block Inspection and Cleaning*.
- Inspect V-ring seals for wear, abrasion, and cuts. If worn or damaged, replace. Refer to *Section 6.2.1—Seal Replacement*.

5.1 Pin Block Inspection and Cleaning

Tools required: *Nylon Brush (ATI part number 3690-0000064-60)*

1. Place the Tool in a secure location.
2. Uncouple the Master and Tool plates.
3. Turn off and de-energize all energized circuits (for example: electrical, pneumatic, and hydraulic circuits).
4. Inspect the Master and Tool pin blocks for debris or darkened pins.

Figure 5.1—Inspect Master and Tool Pin Blocks



5. If debris or darkened pins are present, use a vacuum to remove the debris, and clean using a nylon brush (ATI part number 3690-0000064-60).

NOTICE: Do not use an abrasive media and/or cleaners or solvents to clean the contact pins. Using abrasive media and/or cleaners or solvents will cause damage to the contact surface or cause pins to stick. Clean contact surfaces with a vacuum or non-abrasive media such as a nylon brush (ATI part number 3690-0000064-60).

Figure 5.2—Clean Pin Blocks with a Nylon Brush



6. Inspect the Master and Tool pin blocks for stuck pins or pin block damage.

Figure 5.3—Stuck Pin and Pin Block Damage

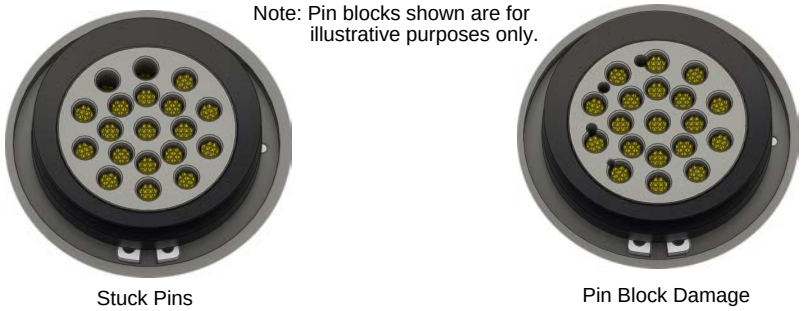

7. If pins become stuck or if there is damage to the pin block, contact ATI for either a possible pin replacement procedure or module replacement.
8. Safely resume normal operation.

6. Troubleshooting and Service Procedures

This troubleshooting section provides information to help diagnose conditions with the Tool Changer or control module. The service procedures provide instructions for component replacement and adjustment.

DANGER: This module has a voltage of 50V or greater; always remove power before contacting the module. Arcing and damage occur if power is not removed from the module during maintenance or service. Always remove power before attaching or disconnecting cables, separating or inserting the mating couplers, or making any contact with the Tool Changer or Utility Coupler.

WARNING: Do not perform maintenance or repair(s) on the Tool Changer or modules unless the Tool is safely supported or placed in the tool stand, all energized circuits (for example: electrical, air, water, etc.) are turned off, pressurized connections are purged and power is discharged from circuits in accordance with the customer specific safety practices and policies. Injury or equipment damage can occur with the Tool not placed and energized circuits on. Place the Tool in the tool stand, turn off and discharge all energized circuits, purge all pressurized connections, and verify all circuits are de-energized before performing maintenance or repair(s) on the Tool Changer or modules.

6.1 Troubleshooting Procedures

Refer to the following table for trouble shooting information.

Table 6.1—Troubleshooting Procedures

Symptom	Possible Cause	Correction
Unit unable to lock or unlock	Debris caught between the Master and Tool plates	Clean debris from between the Master and Tool plates. Verify mounting hardware is secure and does not protrude above the mating surfaces.
	Ball bearings are not moving freely	Verify ball bearings are moving freely, clean and lubricate as needed (refer to Maintenance section of Tool Changer manual for instructions)
	Master and Tool are within the specified No-Touch zone	Verify Master and Tool are within specified No-Touch zone when attempting to lock (refer to Oper*ations Section of Tool Changer manual for specifications)*
	Air supply not to specifications	Check air supply (refer to Installation section of Tool Changer manual for specifications)
	Signals are mapped incorrectly	Verify signals are mapped and communicating properly (refer to *Section 9—Drawings* for electrical schematic)
	Valve adapter exhaust muffler clogged	Check exhaust port is properly vented (refer to Pneumatic Connection section of Base Tool Changer Manual for valve requirements)
Sensors not operating properly	Sensor cables damage or incorrectly connected	Verify cables are connected correctly and not damaged, replace if damaged (refer to Troubleshooting Section of Tool Changer manual)
	Tool plate is not secured properly or debris is trapped between surfaces	Ensure Tool plate is securely held to Master plate and nothing is trapped between plates
	Air trapped in the unlock (U) air port	Ensure that there is no Air trapped in the unlock (U) air port Refer to Air and Valve adapter section for pneumatic specification and requirements.
	Sensor is malfunctioning	Verify sensors are set correctly (refer to Troubleshooting Section of Tool Changer manual)

Table 6.1—Troubleshooting Procedures		
Symptom	**Possible Cause**	**Correction**
Loss of Communication	Damaged signal cabling	Check/Replace signal cabling upstream and downstream of Tool Changer modules.
	Worn or damaged contact pins	Inspect module contact pins for debris/wear/damage. Refer to *Section 5.1—Pin Block Inspection and Cleaning*. V-ring seal damaged and allow debris in contact pins. Replace V-ring seal, refer to *Section 6.2.1—Seal Replacement*.
	Product upstream and downstream of Tool Changer failed or damaged	Check product upstream and downstream of Tool Changer for failure. This failure can falsely “appear” to be caused by the Tool Changer or affect Tool Changer performance.
Power or signal(s) malfunctioning	Object trapped between modules.	Remove object, then re-attempt coupling.
	Servo module contact pin contamination.	Ensure that the spring pins on the Master side can move freely and are not bound by debris. Clean the spring pins to restore free operation. Clean the Tool side module contacts. Refer to *Section 5.1—Pin Block Inspection and Cleaning*. Inspect the seal, replace if damaged. Refer to *Section 6.2.1—Seal Replacement*.
	Contact pin separation due to air supply to the Tool Changer.	Ensure that the Tool Changer has proper pneumatic connections and air is supplied to proper specification. Refer to the Tool Changer section of this manual for air supply requirements.
	Coupling/uncoupling Tool Changer under load.	Revise operating procedures to only couple/uncouple with power disconnected and discharged. Field replacement of the module contacts is not possible.
	Cable damage: pinched, torn, or fatigued cables.	Examine cables for damage, perform a continuity test on cables and replace any damaged cables.
	Servo module damaged.	Refer to *Section 6.1.1—Servo Module, Drive, or Motor Troubleshooting Procedure*.
	Drive or motor damaged.	Refer to *Section 6.1.1—Servo Module, Drive, or Motor Troubleshooting Procedure*.

6.1.1 Servo Module, Drive, or Motor Troubleshooting Procedure



DANGER: This module has a voltage of 50V or greater; always remove power before contacting the module. Arcing and damage occur if power is not removed from the module during maintenance or service. Always remove power before attaching or disconnecting cables, separating or inserting the mating couplers, or making any contact with the Tool Changer or Utility Coupler.

Complete the following steps in accordance with the customer's energy control and electrical safety practices or programs for isolating hazardous energy sources (i.e. electricity, air, etc.). For troubleshooting and servo motor problems, refer to the following sequence:

1. Examine all of the cables, cable connectors, and power sources for problems and correct as necessary.
2. Use a set of test cables (power and signal) to bypass the servo modules and directly connect the drive to the motor:
   a. If the motor does not operate properly with test cables, the problem is in the drive or motor. Troubleshoot these components using that manufacturer's procedures.
   b. If the motor operates properly, go to the next step.
3. Use the test cables from step *2* to connect between the servo drive and ATI master servo module. Use a second set of test cables to connect the Tool servo module to the motor:
   a. If the motor operates properly, the problem is in the original cables, which must be repaired or replaced.
   b. If the motor does not operate properly, the problem is in the servo module:
      i. Examine the servo modules for damage to their electrical connectors and contact pins. Clean all accessible surfaces. Ensure that the spring pins on the Master side can move freely and are not bound by debris. Clean the spring pins to restore operation.
      ii. If the previous steps fail to restore proper operation, contact ATI for service.

6.2 Service Procedures

Component replacement and adjustment procedures are provided in the following section:

6.2.1 Seal Replacement

Parts required: *Refer to Section 7.1—Master Module Serviceable Parts.*

The seal protects the electrical connection between the Master and Tool module. Replace the seal if it becomes worn or damaged.

1. Place the Tool in a secure location.
2. Uncouple the Master and Tool plates.
3. Turn off and de-energize all energized circuits (for example: electrical, pneumatic, and hydraulic circuits).
4. To remove the existing seal, pinch the edge of the seal and pull the seal away from the pin block on the Master module.
5. To install a new seal, stretch the new seal over the shoulder of the pin block.
6. Push the seal hub down against the pin block.
7. Safely resume normal operation.

Figure 6.1—V-ring Seal Replacement

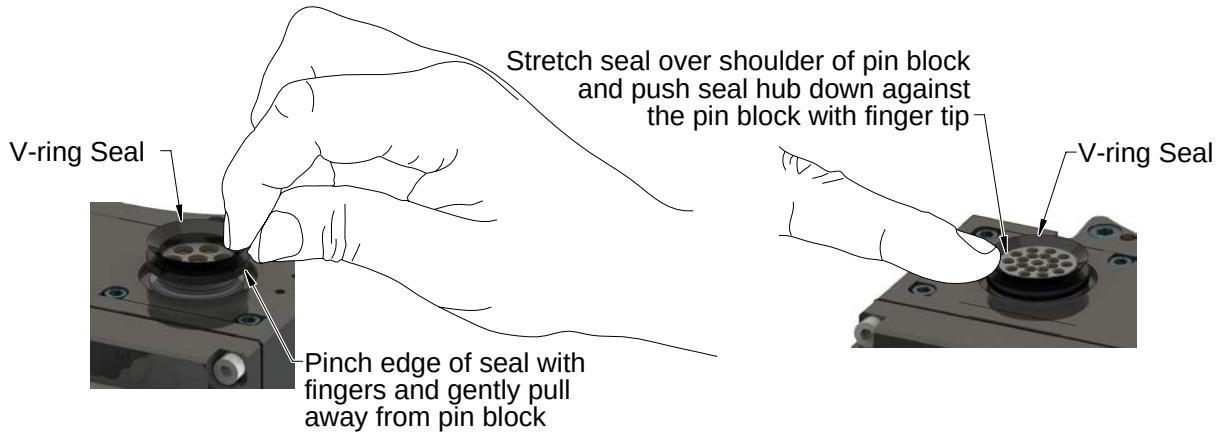

7. Serviceable Parts

7.1 Master Module Serviceable Parts

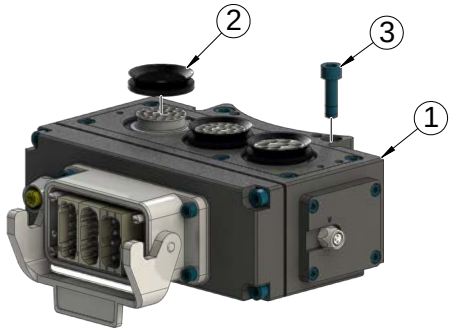

Table 7.1—SC32 Master Module			
Item No.	**Qty**	**Part Number**	**Description**
1	1	9121-SC32-M	SC32 Harting Master Module w/ Redundant Wiring
2	3	4010-0000030-01	V-ring Seal
3	2	3500-1066020-15A	M6 x 20 socket head cap screws, Class 12.9 blue dyed Magni-565, ND Microspheres Epoxy, Yellow

7.2 Tool Module Serviceable Parts

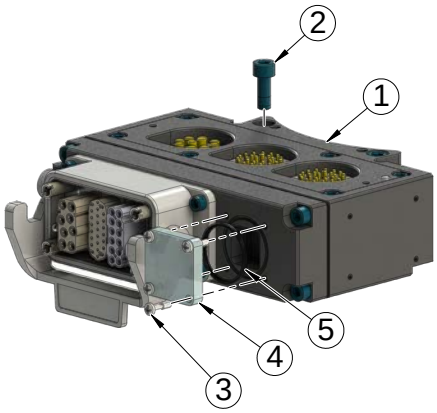

Table 7.2—SC25 Tool Module			
Item No.	**Qty**	**Part Number**	**Description**
1	1	9121-SC25-T	SC25 Harting Tool Module w/ Redundant Wiring
2	2	3500-1066020-15A	M6 x 20 Socket Head Cap Screw, Class 12.9, blue dyed Magini-565, ND Microspheres Epoxy, Yellow
3	4	3500-9957012-21	Pan Head M3 Captive Screw
4	1	3700-20-2696	Window
5	1	3410-0001092-01	O-ring

7.3 Accessories

Table 7.3—Accessories			
Item No.	**Qty**	**Part Number**	**Description**
*	*	3690-0000064-60	Brush, Blue Nylon All Purpose (Contact Pin Cleaning)

8. Specifications

Table 8.1—SC32 Master Module Specifications	
9121-SC32-M	SC32 Harting Master Module w/ Redundant Wiring, Supports Servo Power and Encoder Signals, PROFIBUS/DeviceNet Pass Thru, Supports L/U/R1/R2 Sensors and Integrated Valve, Supports TSI on the Tool
Interface Connector(s)	Harting 10B Connector (8-pin servo power EE male insert, 25-pin HD servo signal male insert, and 12-pin DD field signal bus male insert) 5-pin M12 female terminating resistor connector Integrated Tool Changer I/O: (4X) M8 3-pin female connector supporting Tool Changer Locked, Unlocked, and Ready-to-Lock Proximity sensor in series. 3-pin M8 female valve connector.
Electrical Rating	Power: 15A, 500V (Harting Block c) Signal: 3A, 24V (Harting Block b) PROFIBUS/DeviceNet Pass Through: 3A, 24V (Harting Block a)
	Tool Changer Current Draw: Unswitched Power: 220mA @ 24VDC: Master and Tool with Locked, RTL 1, and RTL 2 sensors Switched Power: 250mA @ 24VDC (solenoid valve) (only when Locking or Unlocking Tool Changer). Tool Changer Control: Lock, Unlock, and Ready-to-Lock Sensors: 10-30VDC operational voltage, 150mA Operational Current.
Weight	3.10 lbs (1.41 kg)

Table 8.2—SC25 Tool Module Specifications	
9121-SC25-T	SC25 Harting Tool Module w/ Redundant Wiring, Supports Servo Power and Encoder Signals, PROFIBUS/DeviceNet Pass Thru, 0-9 Tool-ID, TSI on Tool
Interface Connector(s)	Harting 10B Connector (8-pin servo power EE female insert, 25-pin HD servo signal female insert, and 12-pin DD field signal bus female insert) 4-pin female M12 connector for TSI
Electrical Rating	Power: 15A, 500V (Harting Block c) Signal: 3A, 24V (Harting Block b) PROFIBUS/DeviceNet Pass Through: 3A, 24V (Harting Block a) TSI: 30V, 1 A Tool-ID: 24V, 100 mA
Tool-ID	10 Tool-ID values available (0-9), Factory Setting = 1
Weight	2.75 lbs (1.25 kg)

9. Drawings

Drawings are available on the *ATI website* or by contacting an ATI representative.