Table of Contents

D. Fluid/Air Modules **D-2**

FH12-M/T, AP5-T—Fluid/Air Module **D-2**

1. Product Overview **D-2**

2. Installation **D-3**

2.1 Module Installation **D-3**

2.2 Module Removal **D-4**

3. Operation **D-5**

4. Maintenance **D-6**

5. Troubleshooting and Service Procedures **D-7**

5.1 Troubleshooting **D-7**

5.2 Service Procedures **D-8**

5.2.1 Master Side Self-Sealing Valve D-8

5.2.2 Tool Side Self-Sealing Valve D-11

6. Serviceable Parts **D-14**

7. Specifications **D-14**

8. Drawings **D-15**

D. Fluid/Air Modules

FH12-M/T, AP5-T—Fluid/Air Module

1. Product Overview

Fluid/air modules provide fluid and air utility, and are attached to the Master and Tool plates. When the Tool Changer is coupled, the Master module passes the fluid/air supply to the Tool module for use by the customer tooling. Significant forces are encountered when using these modules. Assistance from the robot may be required to overcome these forces when coupling the Tool Changer.

NOTICE: The Master and Tool modules contain self-sealing valves. Do not use self-sealing valves for vacuum utility.

Table 1.1—Fluid/Air Modules

Module	Fluid/Air Customer Connections	Valves	Material	Seals
FH12-M	(4) G 1/2 (BSPP)	(4) self-sealing check	Stainless Steel	Buna-N
FH12-T	(4) G 1/2 (BSPP)	(4) self-sealing check	Stainless Steel	Buna-N
AP5-T	(1) G 1/2 (BSPP)	(1) self-sealing check	Anodized Aluminum	Buna-N

Figure 1.1—Fluid/Air Modules

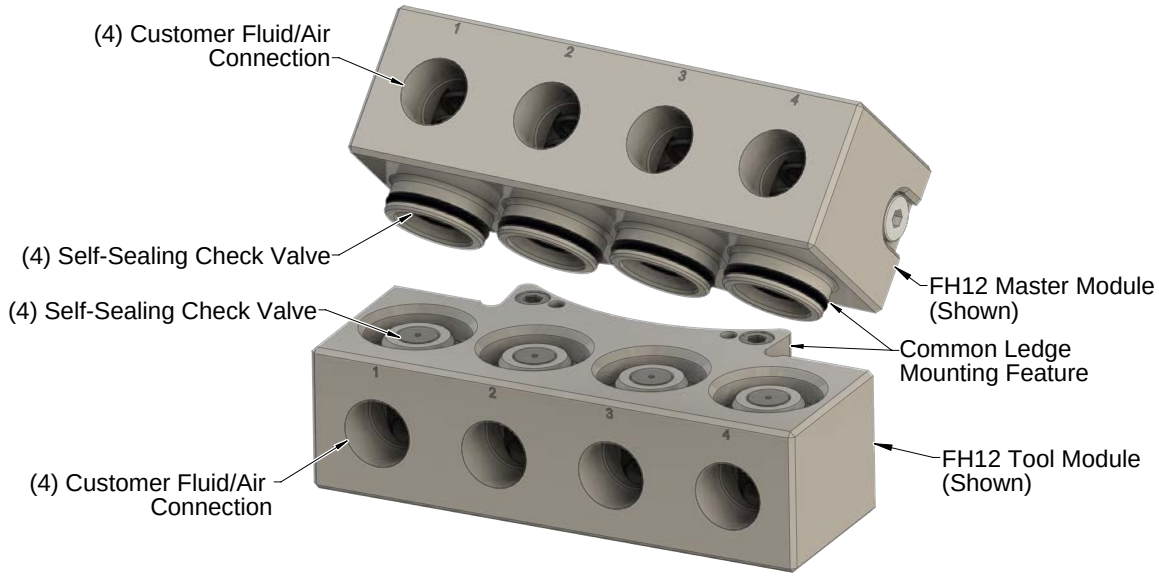

2. Installation

The fluid/air modules are typically installed by ATI prior to shipment. Use the following steps to install or remove fluid/air modules.

WARNING: Do not perform maintenance or repair(s) on the Tool Changer or modules unless the Tool is safely supported or placed in the tool stand, all energized circuits (for example: electrical, air, water, etc.) are turned off, pressurized connections are purged and power is discharged from circuits in accordance with the customer specific safety practices and policies. Injury or equipment damage can occur with the Tool not placed and energized circuits on. Place the Tool in the tool stand, turn off and discharge all energized circuits, purge all pressurized connections, and verify all circuits are de-energized before performing maintenance or repair(s) on the Tool Changer or modules.

CAUTION: Thread locker applied to fasteners must not be used more than once. Fasteners might become loose and cause equipment damage. Always apply new thread locker when reusing fasteners.

2.1 Module Installation

Refer to *Figure 2.1*

Tools required: *5 mm hex key, torque wrench*

Supplies required: *clean rag, Loctite® 242*

1. Place the Tool in a secure location.
2. Uncouple the Master and Tool plates.
3. Turn off and de-energize all energized circuits (for example: electrical, pneumatic, and hydraulic circuits).
4. Wipe down the mounting surfaces with a clean rag.
5. Place the module into the appropriate location on the Tool Changer or Utility Coupler body. Align the module with the Tool Changer using the dowels in the bottom of the ledge feature.
6. Apply Loctite 242 to the supplied M6 socket head cap screws. Using a 5 mm hex key, install the (2) M6 socket head cap screws securing the module to the Tool Changer or Utility Coupler and tighten to 89 in-lbs (10.0 Nm).
7. Ensure the air connectors are clean and connect to the module.
8. Safely resume normal operation.

Figure 2.1—Installation and Removal of the Module

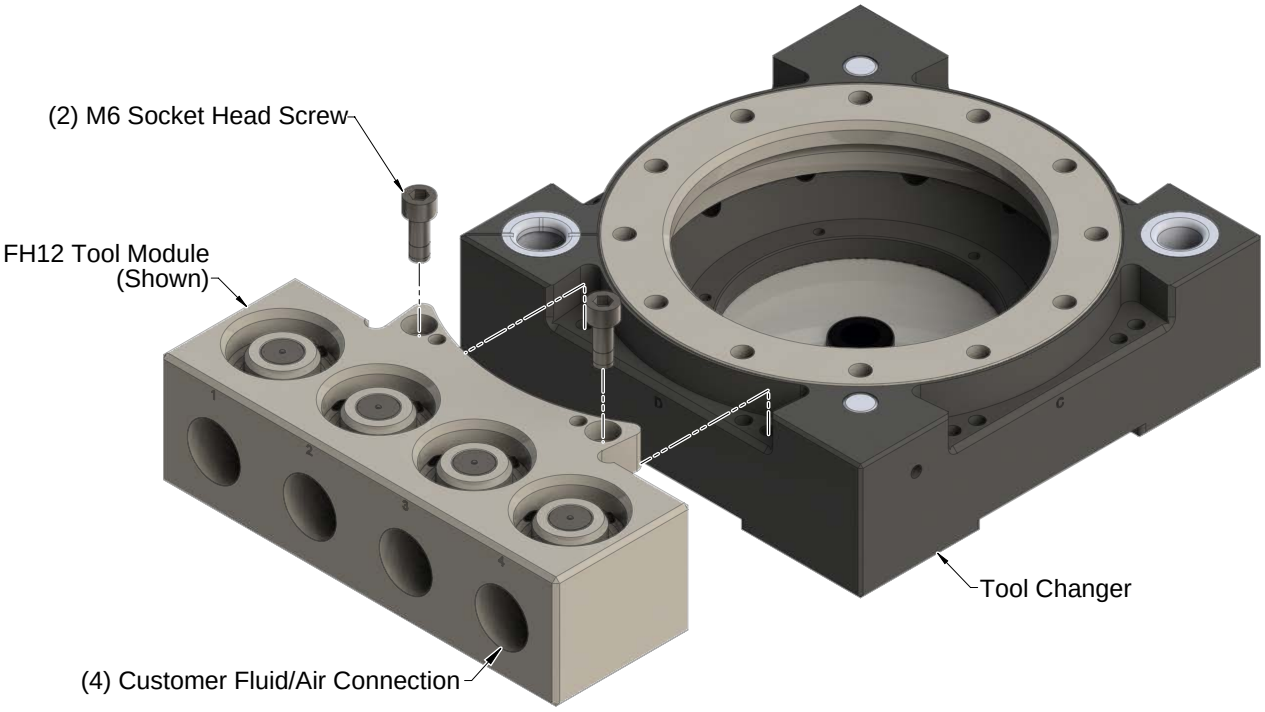

2.2 Module Removal

Tools required: *5 mm hex key*

Supplies required: *clean rag, paint marker*

1. Place the Tool in a secure location.
2. Uncouple the Master and Tool plates.
3. Turn off and de-energize all energized circuits (for example: electrical, pneumatic, and hydraulic circuits).

NOTICE: Debris can be expelled at high velocity during the purge, take all required safety precautions.

4. All customer plumbing connections to the module must be purged.
   a. Verify that the supply lines are turned off.
   b. Cover the valves with a rag for safety.
   c. Manually actuate the self-sealing valves to purge the line pressure.
5. Use a paint marker to indicate where the module is to be re-installed.
6. Disconnect air plumbing to the module.
7. Remove the (2) M6 socket head cap screws using a 5 mm hex key.
8. Remove the module from the Tool Changer or Utility Coupler.

3. Operation

Fluid/air modules pass fluid/air utilities from the Master to the Tool for use by the customer's tooling.

Self-sealing valves prevent fluid/air circuits from discharging during tool changes.

The compressibility of gasses makes it unnecessary to isolate and discharge lines during a tool change. However, liquids are incompressible and therefore coupling lines while pressurized is to be avoided. Liquid displaced by mating coupler components increases pressure and fluid velocities such that seals can be damaged. These problems become more pronounced as the operating pressure is increased.

In all liquid coupling applications, take the following steps:

- Install connections to the ports on the fluid/air modules using flexible hoses, which are able to absorb pressure spikes and pulses. Do not use highly reinforced hoses or hard pipe.
- Turn off the supply pump to the circuit and discharge pressure in the lines prior to a tool change.
- Accumulators can be installed on both the Master and Tool side plumbing. This is particularly important on the Tool side, also with the pump turned off and Master side pressure discharged.
- During routine maintenance of the Tool Changer, the fluid/air modules should be inspected and re-lubricated. Water and most solvents will wash away lubricants necessary to prolong seal life.
- Ensure that fluids are near a neutral pH, minimize particle size.



CAUTION: Failure to follow these steps will result in premature seal failure, jetting of fluid from the couplers during tool changes, and significant pressure pulses in customer tooling.

4. Maintenance

Perform maintenance to maximize the operational life of the module.

WARNING: Do not perform maintenance or repair(s) on the Tool Changer or modules unless the Tool is safely supported or placed in the tool stand, all energized circuits (for example: electrical, air, water, etc.) are turned off, pressurized connections are purged and power is discharged from circuits in accordance with the customer specific safety practices and policies. Injury or equipment damage can occur with the Tool not placed and energized circuits on. Place the Tool in the tool stand, turn off and discharge all energized circuits, purge all pressurized connections, and verify all circuits are de-energized before performing maintenance or repair(s) on the Tool Changer or modules.

A preventive maintenance schedule and checklist are provided in the following table:

Table 4.1—Preventive Maintenance Schedule

Inspection Schedule	Action Required
Weekly	Clean and inspect
6 months or 500,000 cycles	Seal replacement
Checklist	
Weekly Maintenance:	
☐ Clean mating surfaces.	
☐ Inspect the drain holes in the mating surfaces of the Tool module. Refer to *Figure 4.1*.	
☐ Inspect modules for Fluid/Air leaks. Replace components as necessary.	
6 months or 500,000 cycle Maintenance:	
☐ Remove and replace self-sealing valve seals in both the Master and Tool Module. During seal replacement inspect valve stem and dowel pin for straightness. During seal replacement re-lubricate bores. Refer to *Section 5.2.1—Master Side Self-Sealing Valve* and *Section 5.2.2—Tool Side Self-Sealing Valve*.	
☐ Inspect the mounting fasteners for tightness, tighten if loose refer to *Section 2.1—Module Installation*.	

Figure 4.1—Inspect and Clean Drain Holes in Tool Module

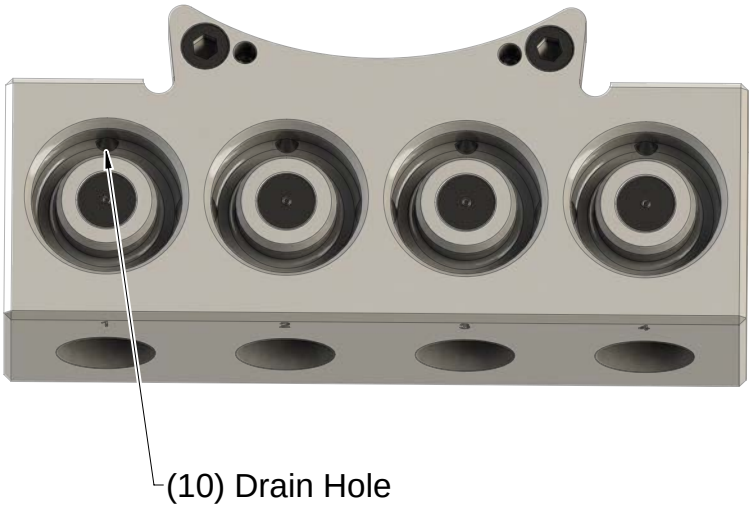

5. Troubleshooting and Service Procedures

The following section provides troubleshooting information to help diagnose conditions with the Tool Changer or air module and service procedures to help resolve these conditions.

WARNING: Do not perform maintenance or repair(s) on the Tool Changer or modules unless the Tool is safely supported or placed in the tool stand, all energized circuits (for example: electrical, air, water, etc.) are turned off, pressurized connections are purged and power is discharged from circuits in accordance with the customer specific safety practices and policies. Injury or equipment damage can occur with the Tool not placed and energized circuits on. Place the Tool in the tool stand, turn off and discharge all energized circuits, purge all pressurized connections, and verify all circuits are de-energized before performing maintenance or repair(s) on the Tool Changer or modules.

5.1 Troubleshooting

Refer to the following table for troubleshooting information:

Table 5.1—Troubleshooting

Symptom	Possible Cause	Correction
Fluid/air leakage	Damaged/worn seals	Replace seals. Refer to *Section 5.2.1—Master Side Self-Sealing Valve* and *Section 5.2.2—Tool Side Self-Sealing Valve.*
	Debris blocking valve seal	Clean in and around valve components. Ensure fluid/air stream is free of large particulates, filter as necessary.
	Bent stem	Replace stem. Check module attachment to Tool Changer. Check robot program and ensure parallel approach trajectory during Tool Changer coupling. Refer to *Section 5.2.1—Master Side Self-Sealing Valve* and *Section 5.2.2—Tool Side Self-Sealing Valve.*
	Corrosion	Consult ATI for assistance.
Fluid spray during uncoupling	Surge/water hammer	Decrease pressure differential between supply and return lines or install pressure compensation system (e.g.; accumulator or surge suppressor as close as possible to spraying port). Consult ATI for assistance.
Reduced flow	Air hose supply/return lines or connections damaged or blocked	Inspect supply/return hoses and connections for damage or blockage, clean/repair/replace as necessary.
	Valve blockage	Inspect valve components and clean/repair as necessary. Refer to *Section 5.2.1—Master Side Self-Sealing Valve* and *Section 5.2.2—Tool Side Self-Sealing Valve.*
Modules won't couple	Debris between Tool Change Master and Tool plates or modules	Clean debris from between Master and Tool plates and modules.
	Bent stem, dowel pin	Replace stem, dowel pins as necessary. Check module attachment to Tool Changer. Check robot program and ensure parallel approach trajectory during Tool Changer coupling. Refer to *Section 5.2.1—Master Side Self-Sealing Valve* and *Section 5.2.2—Tool Side Self-Sealing Valve.*

5.2 Service Procedures

Component replacement and adjustment procedures are provided in the following section.

5.2.1 Master Side Self-Sealing Valve

Parts required: *Refer to Section 8—Drawings*

Tools required: *2.5 mm hex key, torque wrench*

Supplies required: *Clean rag, Magnalube G lubricant, Loctite 7649 and 222*

Refer to *Figure 5.1*

1. Place the Tool in a secure location.
2. Uncouple the Master and Tool plates.
3. Turn off and de-energize all energized circuits (e.g. electrical, air, water, etc.).

NOTICE: Debris can be expelled at high velocity during the purge, take all required safety precautions.

4. Purge and disconnect all customer plumbing connections to the module.
   a. Turn the supply lines off.
   b. Cover the valves with a rag for safety.
   c. Manually actuate the module's self-sealing valves to purge the line pressure. Note: Debris can be expelled at high velocity during the purge, take all required safety precautions.
5. Depending on the type of service or repair, connections to the module might also need to be disconnected.
6. Remove the valve stem using a 2.5 mm hex key. Do not strip the hex on the valve stem during removal.
7. Remove the check valve piston and spring. Clean any lubrication from the check valve piston, valve stem, spring, and bore in the module housing using a clean rag.
8. Inspect the valve stem for straightness, and replace, if bent.
9. Inspect the o-rings and u-cup seal on the valve stem and check valve piston for wear and damage. Replace components that are damaged or worn.
10. Inspect the spring in the assembly and replace if damaged or worn.
11. Inspect the o-ring on the outside of the bore.
12. Clean the mating surfaces of the module.

Figure 5.1—Master Self-Sealing Valve

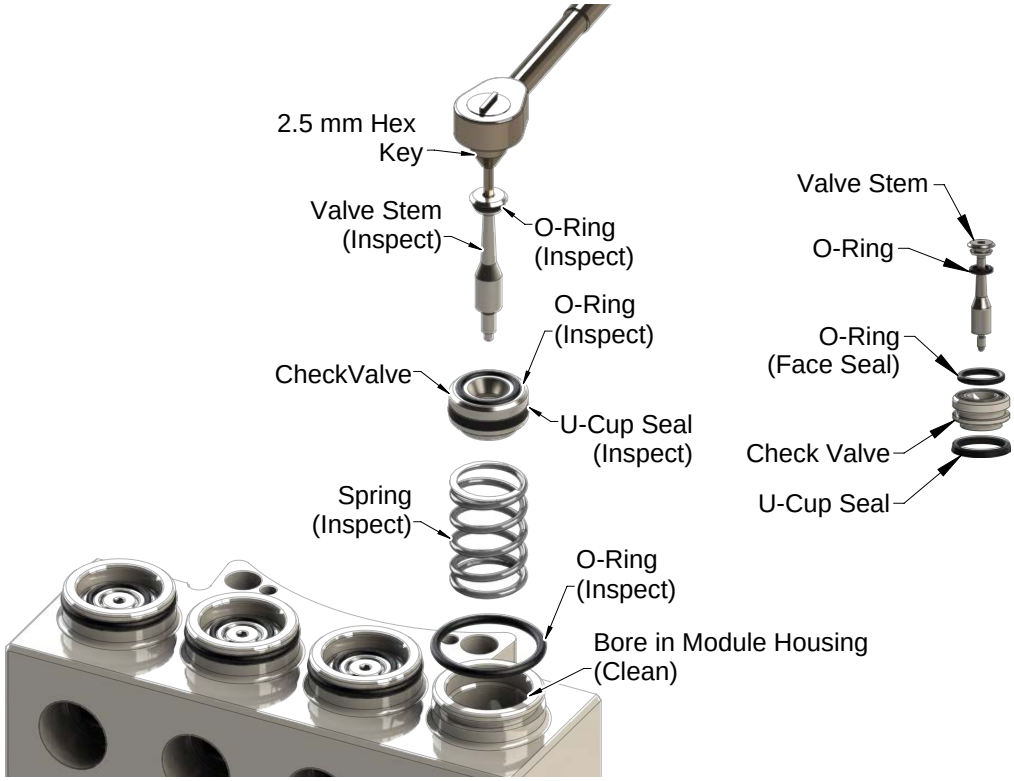

13. Lubricate the bore in the module housing with Magnalube G (Teflon/Petroleum based grease).
14. Install and lubricate the o-ring on the outside of the bore in the module housing with Magnalube G (Teflon/Petroleum based grease).

NOTICE: Do not lubricate the o-ring face seal until after installation. Lubricating the o-ring before installation can cause the o-ring to blow out during coupling and uncoupling.

15. If replacing seals, lubricate the valve stem o-ring and the check valve piston u-cup seal with Magnalube G (Teflon/Petroleum based grease).
16. Install the o-ring on the valve stem.
17. Install the u-cup seal on the check valve. Do not get lubrication in the face seal groove in the check valve.
18. Install the non-lubricated o-ring (face seal) into the check valve.
19. Install the spring into the bore in the module housing, seat the check valve on the spring.
20. If the threaded end of the valve stem does not have pre-applied adhesive, apply Loctite 7649 primer and then Loctite 222 or similar thread locker to the threaded end of the valve stem. If the module housing is stainless steel, also add Loctite 7649 primer to the housing threads.

Figure 5.2—Master Self-Sealing Valve Installation

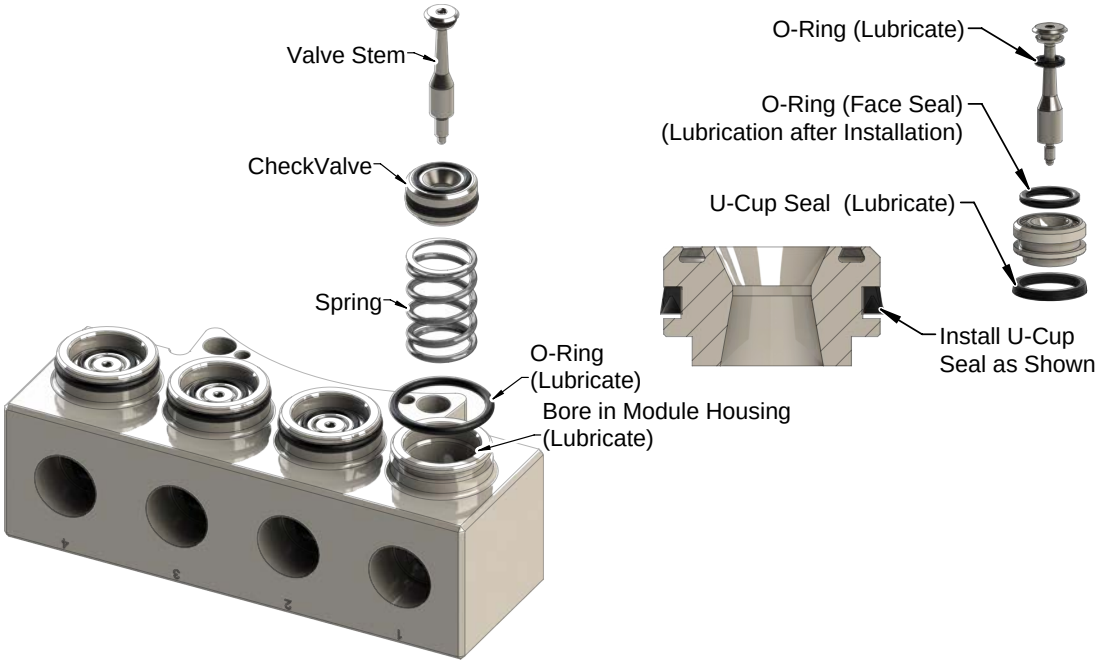

21. Install the valve stem. The check valve piston must be pushed down flush with the mating surface of the Master housing in order to install the threaded end of the valve stem. Do not damage the u-cup seal around the check valve piston. A small, flat-head screwdriver can be used to ensure that the u-cup seal is fully located in the recess and not folded over itself prior to screwing in the valve stem. Tighten the stem to 10 in-lbs (1.1 Nm).
22. Lubricate the installed o-ring (face seal) with Magnalube G (Teflon/Petroleum based grease).
23. Safely resume normal operation.

5.2.2 Tool Side Self-Sealing Valve

Parts required: *Refer to Section 8—Drawings*

Tools required: *10 mm hex key, Torque wrench*

Supplies required: *Clean rag, Magnalube G lubricant*

1. Place the Tool in a secure location.
2. Uncouple the Master and Tool plates.
3. Turn off and de-energize all energized circuits (for example: electrical, pneumatic, and hydraulic circuits).

NOTICE: Debris can be expelled at high velocity during the purge, take all required safety precautions.

4. All customer plumbing connections to the module must be purged.
   a. Verify that the supply lines are turned off.
   b. Cover the valves with a rag for safety.
   c. Manually actuate the self-sealing valves to purge the line pressure.
5. If required disconnect connections to the module.

NOTICE: You might need to remove the Tool side module to access the plug.

6. Remove the plug assembly from the bottom of the air module using a 10 mm hex key.
7. Remove the spring and valve assembly from the housing.

Figure 5.3—Tool Self-Sealing Valve (Disassembly)

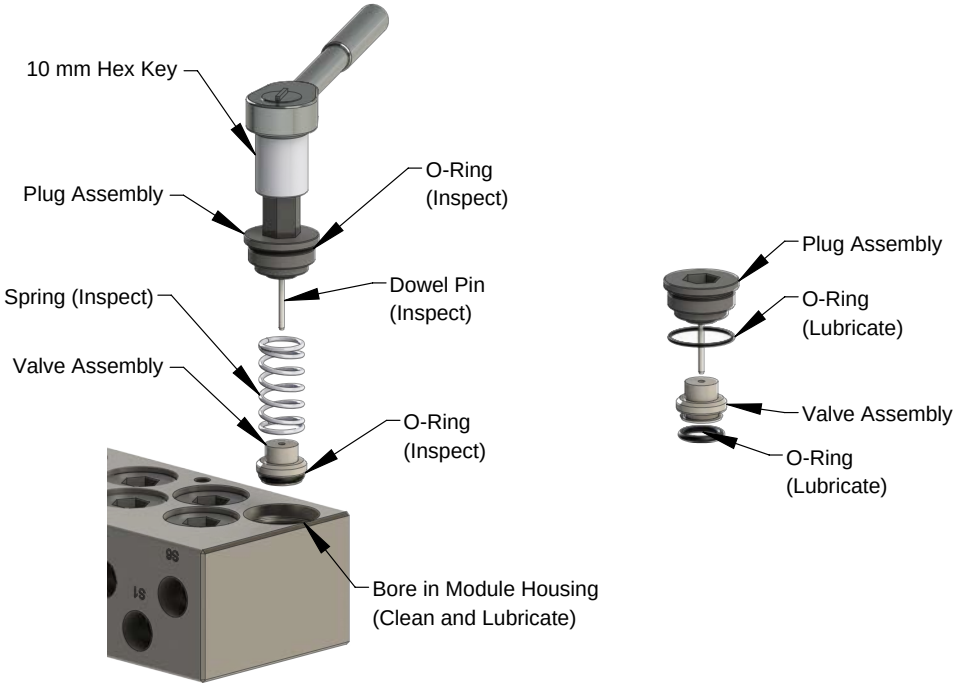

8. Clean all lubrication from the plug assembly, valve assembly, spring, and bore in the housing using a clean rag.
9. Inspect the dowel pin that is contained in the plug assembly for straightness. Replace the plug assembly if the dowel pin is bent.
10. Inspect the O-rings on the plug and valve assemblies, replace if worn or damaged.
11. Inspect the spring in the assembly and replace if worn or damaged.

12. If replacing the O-rings, lubricate both new O-rings with Magnalube G (Teflon/Petroleum based grease).
13. Install the O-rings on the plug assembly and the valve assembly.

Figure 5.4—Tool Self-Sealing Valve (Assembly)

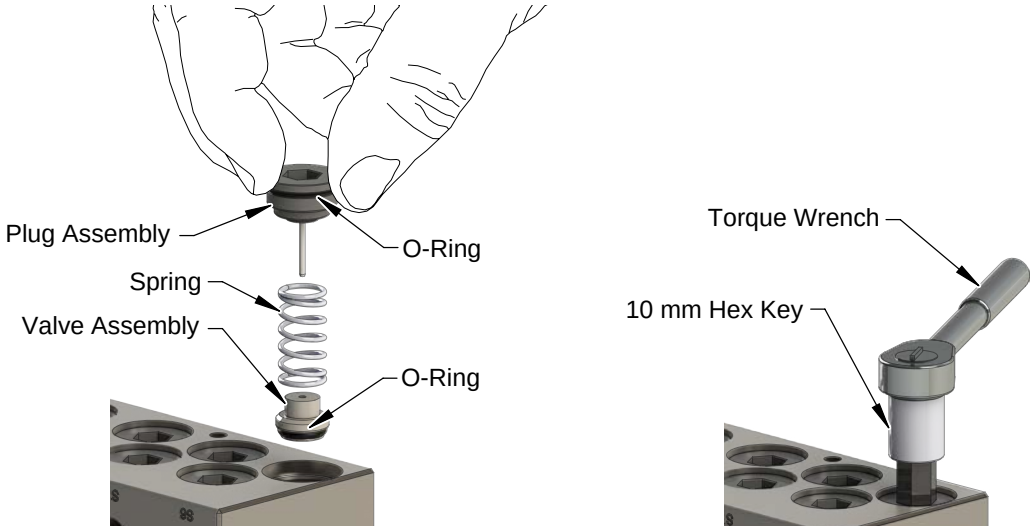

14. Install the check valve piston, make sure it is seated properly in the housing.
15. Install the spring into the housing, make sure it is installed over the step on the check valve.

> **CAUTION:** Do not use excess force when installing the plug assembly into the housing. Using excessive force can damage the O-ring and strip the threads on the plug assembly. Thread the plug assembly into the Tool housing by hand, until several threads are engaged into the housing. Then use a 10 mm hex key to complete the installation. Torque the plug to 30 in-lbs (3.39 Nm).

16. Carefully install the plug assembly aligning the dowel pin into the check valve piston. Thread the plug assembly into the housing by hand until several threads are engaged in the housing.
17. Tighten the plug assembly using a 10 mm hex key to 30 in-lbs (3.39 Nm).
18. Verify the check valve piston is seated properly in the housing.
19. Safely resume normal operation.

6. Serviceable Parts

See drawings in *Section 8—Drawings* of this manual.

7. Specifications

Table 7.1—FH12 Module Specifications	
9121-FH12-M	Stainless Steel Fluid/Air Module with (4) G1/2 (BSPP) Self-Sealing Ports, 3/8 Valve Components, Nipple Port with Radial Seal, Master Side
9121-FH12-T	Stainless Steel Fluid/Air Module with (4) G1/2 (BSPP) Self-Sealing Ports, 3/8 Valve Components, C-bore for Nipple Port, Tool Side
Materials of Construction	Various - Stainless Steel valve components and housing, Buna-N seals
Weight:	
Master Module	6.4 lbs (2.90 kg)
Tool Module	5.0 lbs (2.27 kg)
Self-sealing Valves:	
Quantity	4
Air Pressure	Maximum pressure of 100 psi (6.9 bar)
Cv, Min	1.6
Customer Port Connection	G 1/2 (BSPP)

Table 7.2—AP5 Module Specifications	
9121-AP5-T	Air Module with (1) G1/2 (BSPP) Self-Sealing Port, 3/8 Valve Components, C-bore for Nipple Port, Tool Side
Materials of Construction	Various - Stainless Steel valve components, aluminum housing, Buna-N seals
Weight:	
Tool Module	2.0 lbs Est. (0.91 kg Est)
Self-sealing Valves:	
Quantity	1
Air Pressure	Maximum pressure of 100 psi (6.9 bar)
Cv, Min	1.6
Customer Port Connection	G 1/2 (BSPP)

8. Drawings

Drawings are available on the *ATI website* or by contacting an ATI representative.