Table of Contents

D. Vacuum Modules 2
V112A-E 2
1. Product Overview 2
2. Installation 3
    2.1 Installation 3
    2.2 Removal 3
3. Operation 3
4. Maintenance 3
    4.1 Master-Side 3
5. Troubleshooting 4
6. Recommended Spare Parts 4
7. Specifications 4
8. Drawings 5

D. Vacuum Modules

V112A-E

1. Product Overview

Modules providing vacuum service are attached to the Master and Tool Plates. Refer to the table and figure below for a description of the specific modules being presented in this section.

V112A-M-E	(1)1-1/2" BSPP "G" vacuum module with radial port
V112A-T-E	(1)1-1/2" BSPP "G" vacuum module with radial ports

Table 1.1—Vacuum Modules

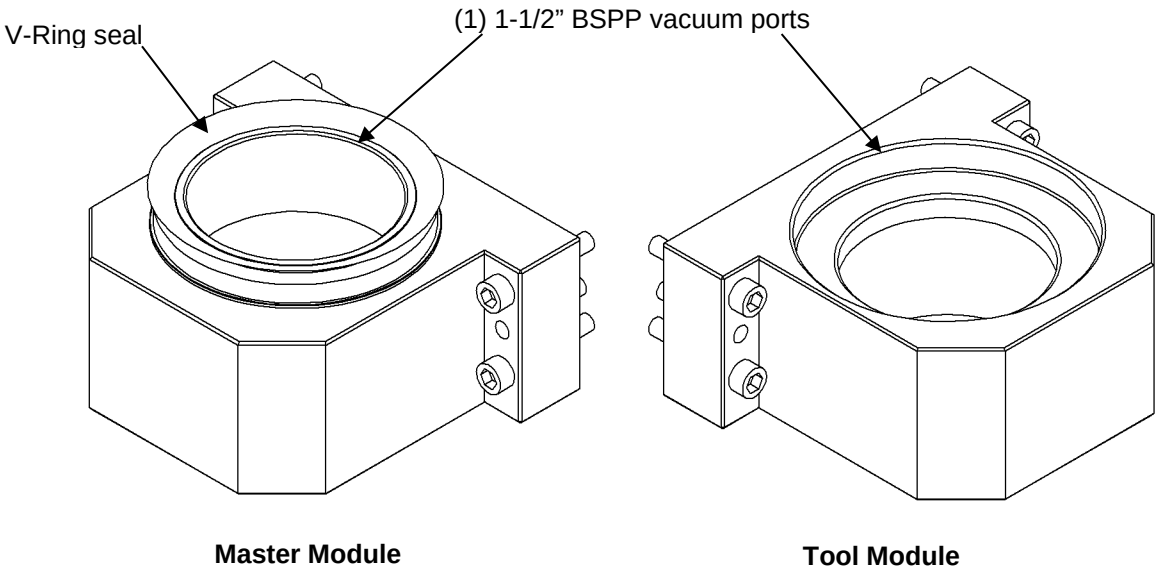

Figure 1.1—Vacuum Module (V112A-M-E and V112A-T-E)

2. Installation

The vacuum modules are typically installed by ATI prior to shipment. The steps below outline the field installation or removal as required.

DANGER: Power and air should always be removed prior to maintenance or repair.

2.1 Installation

It may be necessary to clean the mounting surface on the tool changer prior to installing the module in order to remove any debris that may be present.

Align the module to the holes in the tool changer mounting surface using the socket flat head cap screws that are provided with the module. Push the module up flush with the tool changer surface. Apply Loctite-242® (or similar) thread locker to the socket flat head cap screws and tighten using a hex key.

Connect customer plumbing to the module.

2.2 Removal

All customer plumbing connections to the module need to be purged and disconnected.

Remove the socket flat head cap screws and pull the module off the tool changer.

3. Operation

The vacuum modules are designed to pass vacuum from the Master to the Tool for use by the customer's tooling.

4. Maintenance

Once installed the operation of the vacuum module is generally trouble free. Periodically the condition of the v-ring should be checked. Replace if damaged or degraded. Any contamination in or around the mating surfaces of the modules should be removed with industrial contact cleaner. During inspection, ensure that the fasteners attaching the modules to the tool changer are secure.

The modules may be field serviced as needed. The following describes how to perform service.

4.1 Master-Side

DANGER: Power and air should always be removed prior to maintenance or repair.

The v-ring seal can be replaced by pulling the v-ring off of the retaining groove. Replace with part number 4010-0000046-01.

5. Troubleshooting

Problem	Cause	Remedy
Leakage	Worn v-ring	Replace v-ring
Poor vacuum	Vacuum port blockage	Inspect modules and supply lines for blockage, clean/repair as necessary.
Modules wont couple	Loose mounting fasteners	Check module attachment to tool changer.

6. Recommended Spare Parts

See drawings in Section 8.

7. Specifications

Vacuum/Air Modules	**V112A-M-E, V112A-T-E**	
Weight	0.85 lbs (0.39 kg) 0.80 lbs (0.36 kg)	V112A-M-E V112A-T-E
Materials of Construction	Various	Housing - Anodized Aluminum Seal - Nitrile (Buna-N)
Vacuum Port (qty) Size		BSPP “G” Ports
	(1) 1-1/2” (38.1mm) (1) 1-1/2” (38.1mm)	V112A-M-E V112A-T-E

8. Drawings

Drawings are available on the ATI website or by contacting an ATI representative.