Table of Contents

F. High-Current Modules F-2
PBx—High-Current Module F-2
1. Product Overview F-2
2. Installation F-4
2.1 Module Cable Installation F-4
2.2 Module Installation F-7
2.3 Module Removal F-7
3. Operation F-8
4. Maintenance F-9
5. Troubleshooting and Service Procedures F-10
5.1 Troubleshooting F-10
5.1.1 Troubleshooting Sequence F-11
5.2 Service Procedures F-12
5.2.1 Master Module Contact Tip Replacement F-12
5.2.2 Tool Module Contact Tip and Wave Spring Replacement F-13
5.2.3 Module Contact Base Replacement F-14
5.2.4 V-ring Seal Replacement F-17
6. Serviceable Parts F-18
7. Specifications F-18
7.1 PB2 Specifications F-18
7.2 PB3 Specifications F-19
7.3 PB4 Specifications F-19
7.4 PB5 Specifications F-20
8. Drawings F-21

F. High-Current Modules

PBx—High-Current Module

1. Product Overview

The high-current modules used by the spot-welding Tool Changer are designed to carry high-current from a power supply to customer tooling. They consist of the rhodium-plated copper contacts.

Table 1.1PB—High-Current Modules

Model	Contacts	Amps	Volts
PB2	2	200	600
PB3	2	200	
PB4	1	200	
PB5	1	150	

Power must be off when coupling and uncoupling. The installation of over-current protection in the primary power supply circuit is recommended.



DANGER: This module has a voltage of 50V or greater; always remove power before contacting the module. Arcing and damage occur if power is not removed from the module during maintenance or service. Always remove power before attaching or disconnecting cables, separating or inserting the mating couplers, or making any contact with the Tool Changer or Utility Coupler.



CAUTION: To avoid damage to the contacts, never uncouple the unit without first disconnecting and discharging the power that passes through these pins. This is especially true when using high voltage circuits.

The high-current modules use patented, cone-mating technology to transfer current from the Master to the Tool. The mating conical surfaces provide a large contact area, excellent alignment capability, and enable efficient coupling/uncoupling without high spring forces or excessive wear. If required, the contact tips on either the Master or Tool can be replaced without removing the wiring.

The contact tips on the Master side are recessed below the surface and contain a central insulated post. The modules were designed so that the finger of an average human adult cannot touch the metallic parts. The center contact is designed to engage first and break last and is intended for use as a ground contact.

The high current tool module provides compliant motion in the power contacts, ATI requires the use of high-flex type with fine stranding cables and proper strain relief to allow for motion.

Figure 1.1 —PBx Modules

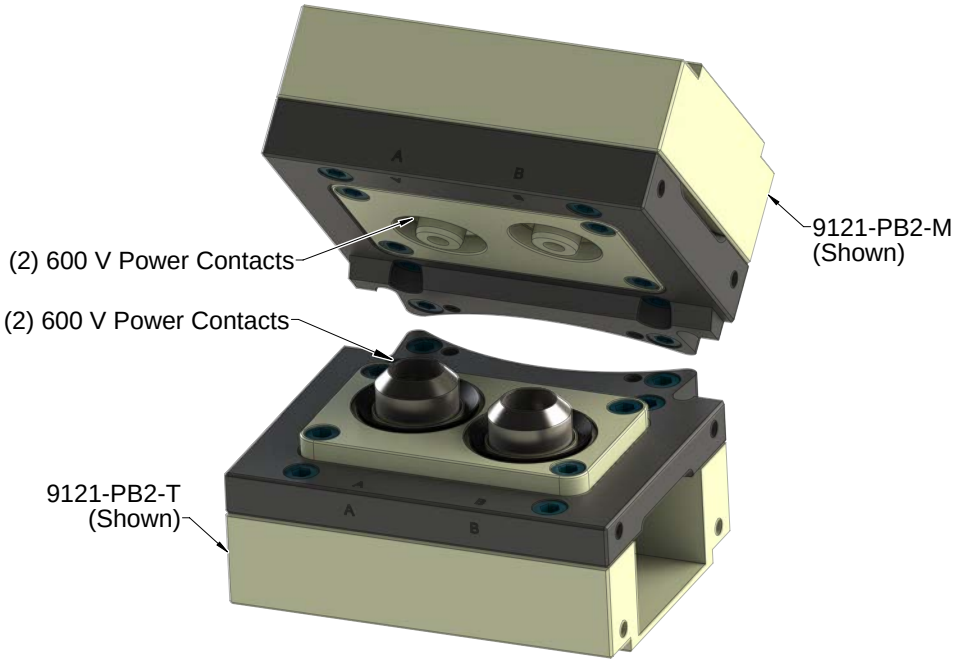

A fitting plate is required to support a customer supplied strain relief fitting to grip the customer supplied cables.

Figure 1.2—Fitting Plate

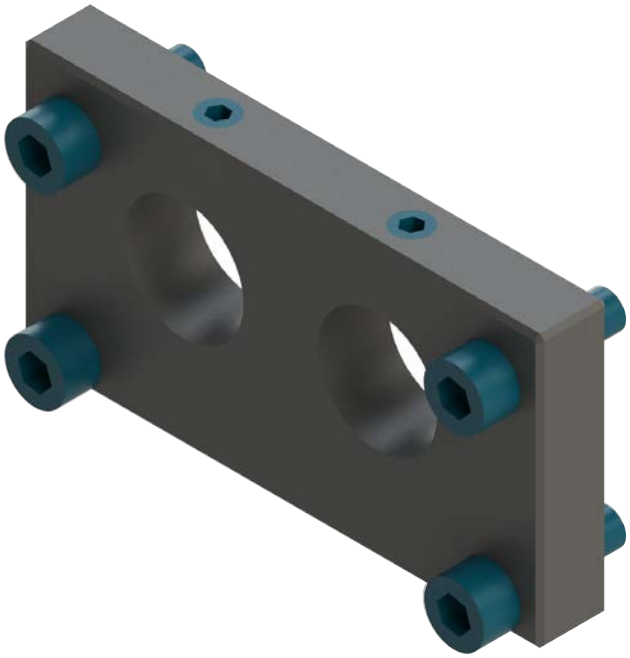

2. Installation

The PBx modules have (2) high-current electrical contacts. A fitting plate may be specified at the time of the order to support a customer supplied strain relief fitting. Once the fitting plate is installed on the modules, the prepared cable ends are fed through the strain relief and into the modules where the conductors are attached to the contact bases. The center contact is designed to engage first and break last and is intended for use as a ground contact. For ease of cable installation, it is recommended that the modules be removed from the Tool Changer.

The high-current modules are typically installed by ATI prior to shipment. The following steps outline installation or removal as required. These steps also detail connecting cables to the contacts.

DANGER: This module has a voltage of 50V or greater; always remove power before contacting the module. Arcing and damage occur if power is not removed from the module during maintenance or service. Always remove power before attaching or disconnecting cables, separating or inserting the mating couplers, or making any contact with the Tool Changer or Utility Coupler.

WARNING: Do not perform maintenance or repair(s) on the Tool Changer or modules unless the Tool is safely supported or placed in the tool stand, all energized circuits (for example: electrical, air, water, etc.) are turned off, pressurized connections are purged and power is discharged from circuits in accordance with the customer specific safety practices and policies. Injury or equipment damage can occur with the Tool not placed and energized circuits on. Place the Tool in the tool stand, turn off and discharge all energized circuits, purge all pressurized connections, and verify all circuits are de-energized before performing maintenance or repair(s) on the Tool Changer or modules.

CAUTION: Do not use stiff, heavy stranded cables which can inhibit operation of the high current module. Stiff cables can prevent compliant motion of the contacts and cause an intermittent or improper power connection. Operation of the high current module requires the customer supplied cables to be high-flex type with fine stranding and sufficient strain relief to allow free cable motion.

CAUTION: Thread locker applied to fasteners must not be used more than once. Fasteners might become loose and cause equipment damage. Always apply new thread locker when reusing fasteners.

2.1 Module Cable Installation

Tools required: *4 mm and 5 mm Allen® wrenches (hex key), 13/16 wrench, torque wrench, wire stripper*

1. If already installed on the Tool Changer, remove the (2) M6 socket head cap screws that secure the module to the Tool Changer and lift the module assembly off the Tool Changer body.
2. Insert the customer supplied strain relief fitting (with lock nut) into the fitting plate.
3. Orient the strain relief fitting as desired and tighten the (2) M8 set screws against the strain fitt'sing threads using a 4 mm Allen wrench.
4. Use an appropriate tool and tighten the strain relief lock nut to the front face of the fitting plate, which provides more fitting retention than the set screws alone.
5. To access the inside of the housings, remove the (4) M6 socket head screws that secure the module cover to the mounting plate using a 5 mm Allen wrench. Remove the cover.

Figure 2.1—Module, Fitting Plate, and Strain Relief

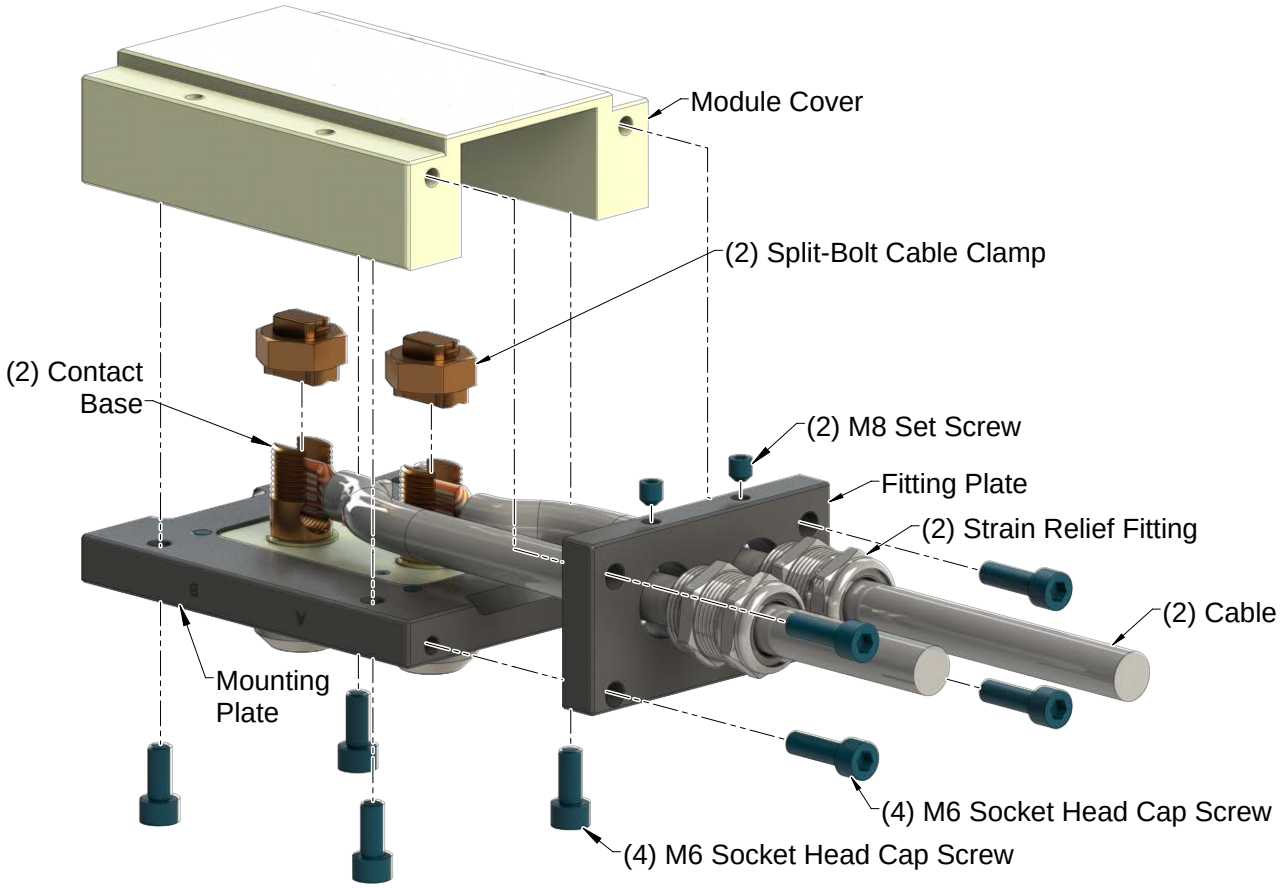

6. Use (2) of the M6 socket head screws to attach the fitting plate to the desired end of the module mounting plate. Leave these screws slightly loose at this time.

Figure 2.2—Cable Orientation

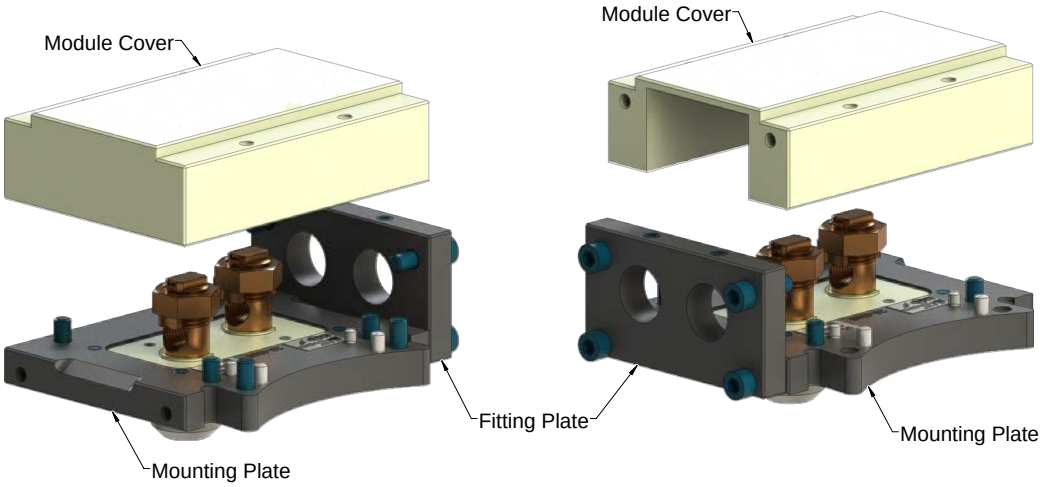

CAUTION: Do not use stiff, heavy stranded cables which can inhibit operation of the high current module. Stiff cables can prevent compliant motion of the contacts and cause an intermittent or improper power connection. Operation of the high current module requires the customer supplied cables to be high-flex type with fine stranding and sufficient strain relief to allow free cable motion.

7. Feed the cable(s) through the customer supplied strain relief fitting and prepare the cable ends by stripping the insulation back approximately 3/4" (19 mm) using wire strippers. Be careful not cut individual strands while stripping the cable insulation.

Figure 2.3—Wire Stripping and Clamping



8. To attach the cables to the contact bases, remove the split-bolt nuts from the contact bases.

Figure 2.4—Module, Fitting Plate, and Strain Relief

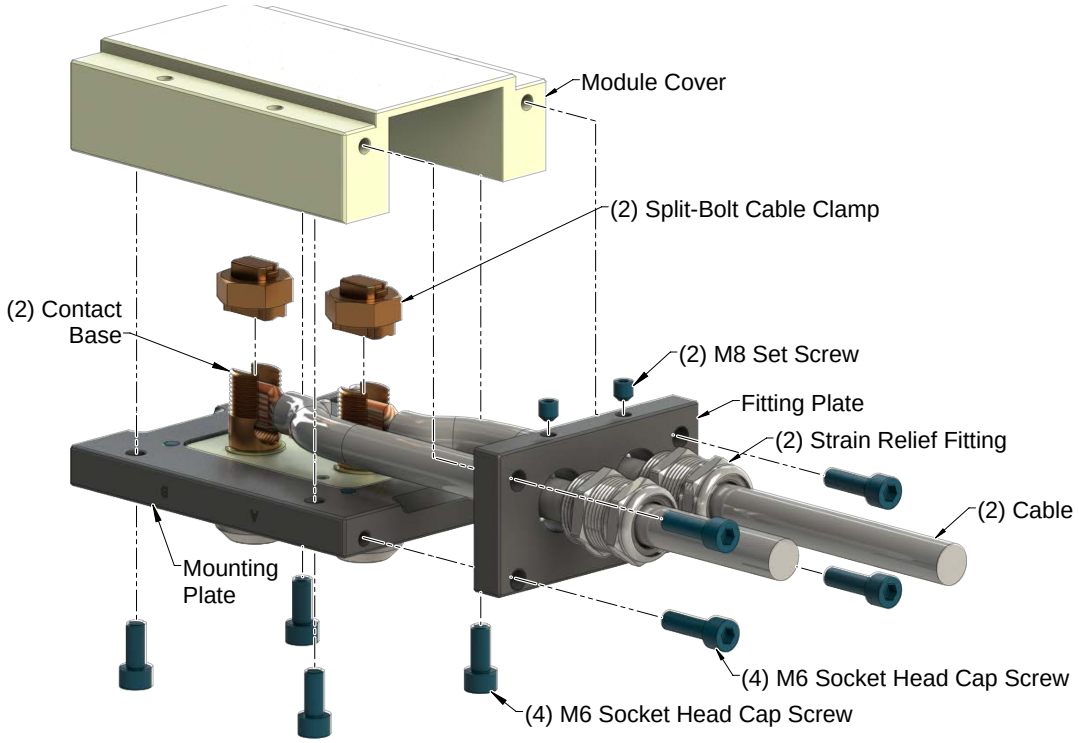

9. Insert each prepared cable end into the appropriate contact base and replace the split-bolt nut. Make sure that no loose wire filaments are protruding from the contact bases. Also, ensure that the clamping lugs are not clamped on the cable insulation and the entire clamp lug is contacting the copper wire. Tighten to 90 in-lbs (10 Nm) using a 13/16 wrench.

NOTICE: When routing cables inside the module, be sure that the cables and cable insulation do not contact the other contact bases. Contact could cause short or damage to cable insulation.

10. Install the module cover to the mounting plate with the open end toward the fitting plate.
11. Loosely install the (2) M6 socket head cap screws that secure the fitting plate to the module cover.
12. Install the (4) M6 socket head cap screws that secure the module cover to the mounting plate using a 5 mm Allen wrench. Tighten to 45 in-lbs (5.0 Nm).
13. Tighten the (4) M6 socket head cap screws that secure the fitting plate to the module to 45 in-lbs (5.0 Nm).
14. Install the module onto the Tool Changer. Refer to *Section 2.2—Module Installation*.

2.2 Module Installation

Tools required: *5 mm Allen wrench (hex key), torque wrench*

Supplies required: *Clean rag, Loctite® 242 (If the fasteners do not have pre-applied adhesive)*

1. Clean the mating surfaces.
2. Using the ledge feature, place the module into the appropriate location on the Tool Changer body. Align the module with the Tool Changer using the dowels in the bottom of the ledge feature. Refer to *Figure 2.5*.
3. If the fasteners do not have pre-applied adhesive, apply Loctite 242 to the (2) M6 socket head cap screws.
4. Install the (2) M6 socket head screws that secure the module to the Tool Changer using a 5 mm Allen wrench. Tighten to 70 in-lbs (7.9 Nm).
5. After the procedure is complete, resume normal operation.

Figure 2.5—Module Installation

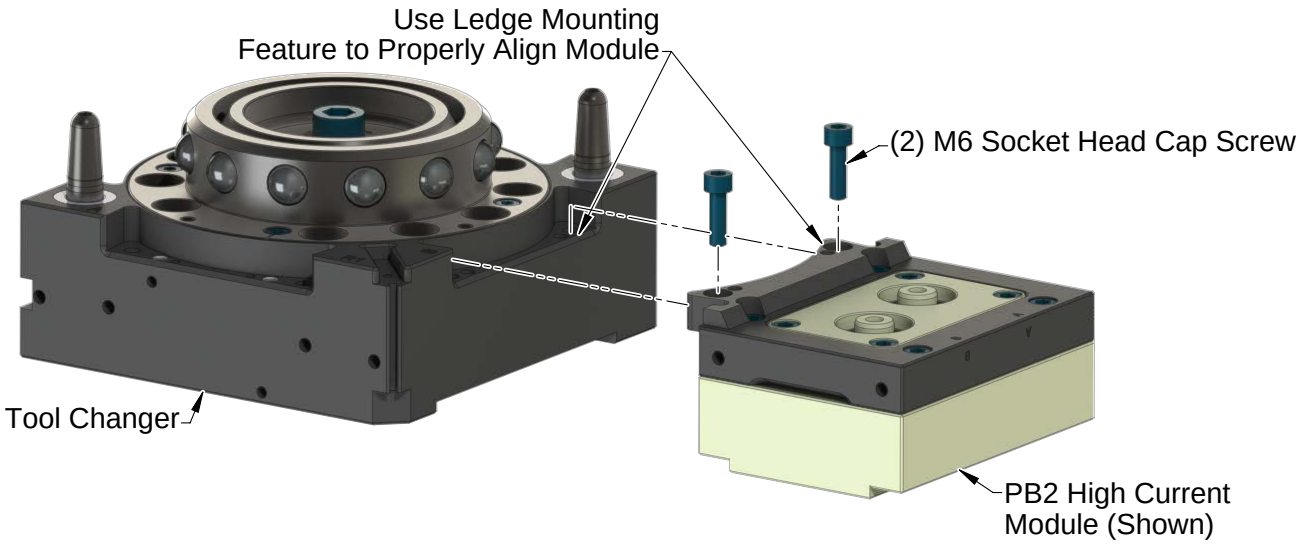

2.3 Module Removal

Tools required: *5 mm Allen wrench (hex key)*

1. Place the Tool in a secure location.
2. Uncouple the Master and Tool plates.
3. Turn off and de-energize all energized circuits (e.g. electrical, air, water, etc.).
4. Prior to removing the module, use a marker pen to scribe a line or indication between the Tool Changer and module body as a reminder where the module is to be re-installed.
5. Depending upon the service or repair being done, utilities and connections to the module may or may not need to be disconnected.
6. Remove the socket head cap screws and lift the module from the Tool Changer. Refer to *Figure 2.5*.

3. Operation

High-current modules are designed to carry large currents to various industrial devices, to provide a separable joint in the power wiring. To maximize the service life of these components, the following points must be observed:



WARNING: The contacts are not a switch. For safety and to prevent equipment damage, disconnect and drain all power before coupling or uncoupling the Tool Changer or Utility Coupler.



CAUTION: Do not couple or uncouple the high-current modules unless electrical power has been disconnected and discharged both upstream and downstream from the modules. Arcing and contact damage will occur. Remove power and discharge both upstream and downstream modules before coupling or uncoupling modules.



CAUTION: Improper cable routing can result in wires and cables being pinched in the joint between the Tool Changer plates and premature failure of the electrical connectors. Properly route and secure all cables, particularly on the Master side.



CAUTION: Always protect the un-used Tool modules when not coupled to a Master module. Dust, debris, and weld spatter can contaminate the contact tips, which can cause arcing and a significant decrease in contact life.



CAUTION: Do not use stiff, heavy stranded cables which can inhibit operation of the high current module. Stiff cables can prevent compliant motion of the contacts and cause an intermittent or improper power connection. Operation of the high current module requires the customer supplied cables to be high-flex type with fine stranding and sufficient strain relief to allow free cable motion.

4. Maintenance

Under normal conditions, no special maintenance is necessary; however, it is recommended that periodic inspections be performed to assure long-lasting performance and verify that unexpected damage has not occurred. Refer to the list below for periodic maintenance items.



DANGER: This module has a voltage of 50V or greater; always remove power before contacting the module. Arcing and damage occur if power is not removed from the module during maintenance or service. Always remove power before attaching or disconnecting cables, separating or inserting the mating couplers, or making any contact with the Tool Changer or Utility Coupler.



WARNING: Do not perform maintenance or repair(s) on the Tool Changer or modules unless the Tool is safely supported or placed in the tool stand, all energized circuits (for example: electrical, air, water, etc.) are turned off, pressurized connections are purged and power is discharged from circuits in accordance with the customer specific safety practices and policies. Injury or equipment damage can occur with the Tool not placed and energized circuits on. Place the Tool in the tool stand, turn off and discharge all energized circuits, purge all pressurized connections, and verify all circuits are de-energized before performing maintenance or repair(s) on the Tool Changer or modules.

If the Tool Changer or Utility Coupler is used in dirty environments (for example: welding or deburring applications), limit the exposure of the Tool Changer or Utility Coupler. Idle Tool assemblies should be covered to prevent debris from settling on the mating surface. Also, the Master assembly should be exposed for only a short period of time during Tool change and down time. Perform the following visual inspection monthly:

- Inspect that mounting fasteners are tight, and If loose, tighten to the proper torque. Refer to *Section 2.2—Module Installation.*
- Cable connections should be inspected during maintenance periods, to ensure they are secure. Loose connections should be cleaned and re-tightened . Inspect cable sheathing for damage, repair or replace damaged cabling. Loose connections or damaged cabling are not expected and may indicate improper routing and/or strain relieving.
- Inspect the Master and Tool contact tips for pin damage, debris or darkened pins. Refer to *Section 5.2.1—Master Module Contact Tip Replacement* and *Section 5.2.2—Tool Module Contact Tip and Wave Spring Replacement*.
- Inspect seal for wear, abrasion, and cuts. If worn or damaged, replace. Refer to *Section 5.2.4—V-ring Seal Replacement.*

5. Troubleshooting and Service Procedures

The following section provides troubleshooting and service information to help diagnose conditions and repair the high-current module.

DANGER: This module has a voltage of 50V or greater; always remove power before contacting the module. Arcing and damage occur if power is not removed from the module during maintenance or service. Always remove power before attaching or disconnecting cables, separating or inserting the mating couplers, or making any contact with the Tool Changer or Utility Coupler.

WARNING: Do not perform maintenance or repair(s) on the Tool Changer or modules unless the Tool is safely supported or placed in the tool stand, all energized circuits (for example: electrical, air, water, etc.) are turned off, pressurized connections are purged and power is discharged from circuits in accordance with the customer specific safety practices and policies. Injury or equipment damage can occur with the Tool not placed and energized circuits on. Place the Tool in the tool stand, turn off and discharge all energized circuits, purge all pressurized connections, and verify all circuits are de-energized before performing maintenance or repair(s) on the Tool Changer or modules.

5.1 Troubleshooting

The high-current modules provide a separable joint in the cabling between power sources and industrial devices. Failure of the industrial devices to operate for any reason must be diagnosed electrically.

Table 5.1—Troubleshooting

Symptom	Possible Cause	Correction
Power intermittently functioning or not functioning at all	Object trapped between modules	Remove the object, then re-attempt coupling.
	Contact Contamination due to environment	Ensure that the spring loaded contacts on the Tool-side can move freely and are not bound by debris. Clean the spring pins to restore free operation. Clean Tool-side module contacts, refer to *Section 5.2.2—Tool Module Contact Tip and Wave Spring Replacement*. Inspect seal, replace If damaged refer to *Section 5.2.4—V-ring Seal Replacement*
	Contact Pin Separation	Any contamination on the contacts should be removed using a stiff nylon brush.
		Air supplied to Tool Changer insufficient, Improper valve used. Refer to Tool Changer manual for pneumatic requirements.
	Module Contact Damage due to Coupling/Uncoupling under load.	Revise operating procedures to only couple/uncouple with power disconnected and discharged. Replace module contacts, refer to *Section 5.2.1—Master Module Contact Tip Replacement* and *Section 5.2.2—Tool Module Contact Tip and Wave Spring Replacement* for Tool module
	Rigid customer cable connection to module termination	Change to high-flex, fine strand cables to terminate to high current module. Route and properly restrain cables to allow for motion on the Tool side.
	Cable damage - Pinched, torn, or fatigued cables, contact base, or contact spring worn out or damaged.	Inspect cables and contact base for damage, test cables, test contact springs, refer to *Section 5.1.1—Troubleshooting Sequence.* To replace contact bases or spring, refer to *Section 5.2.3—Module Contact Base Replacement*

5.1.1 Troubleshooting Sequence



DANGER: This module has a voltage of 50V or greater; always remove power before contacting the module. Arcing and damage occur if power is not removed from the module during maintenance or service. Always remove power before attaching or disconnecting cables, separating or inserting the mating couplers, or making any contact with the Tool Changer or Utility Coupler.

The following sequence is recommended for troubleshooting primary current problems:

1. First examine all the cables, cable connectors, and power sources for problems and correct as necessary.
2. Use a known good cable to bypass the modules and directly connect the supply to the load.
3. If the load does not operate properly with known good cables, the problem is in the supply or load. Troubleshoot these components using that manufacturer's procedures.
4. If the load operates properly, use the known good cables from the step 2 to connect between the supply and Master module. Use a second set of the known good cables to connect the Tool module to the load.
5. If the load operates properly, the problem is in the old cables, which must be repaired or replaced.
6. If the load does not operate properly, the problem is in the high-current modules.
7. Externally, examine the modules for loose, missing, or damaged contacts replacing and tightening as necessary.
8. Remove the covers from the modules and insure that the cables have not come loose from the contact bases. Re-secure the cables as necessary. Refer to the cable installation section.
9. Use a hardwood dowel or other non-metallic, soft rod to push axially on the tool side contacts to verify free axial motion. If the springs under these contacts do not allow axial motion of the contacts, replace the springs accordingly as outlined above in the maintenance section.

If the above steps fail to restore proper operation contact ATI for service.

5.2 Service Procedures

The following service procedures provide instructions for component replacement.

5.2.1 Master Module Contact Tip Replacement

Parts required: *Refer to Section 8—Drawings*

Tools required: *2.5 mm or 3 mm hex key, torque wrench*

Supplies required: *Non-hardening, conductive silver bearing grease (ATI #0290-70-0000-50-008, McMaster-Carr #1219K57, AI Technology #ELGR8501 or equivalent)*

Removal:

1. Place the Tool in a secure location.
2. Uncouple the Master and Tool plates.
3. Turn off and de-energize all energized circuits (for example: electrical, pneumatic, and hydraulic circuits).
4. Remove the M3 or M4 socket head cap screw from the center of the insulator post using a 2.5 mm or 3 mm hex key.
5. Remove the insulator post and the Master contact tip. Discard the contact tip.

Figure 5.1—Master Module Contact Tip Replacement

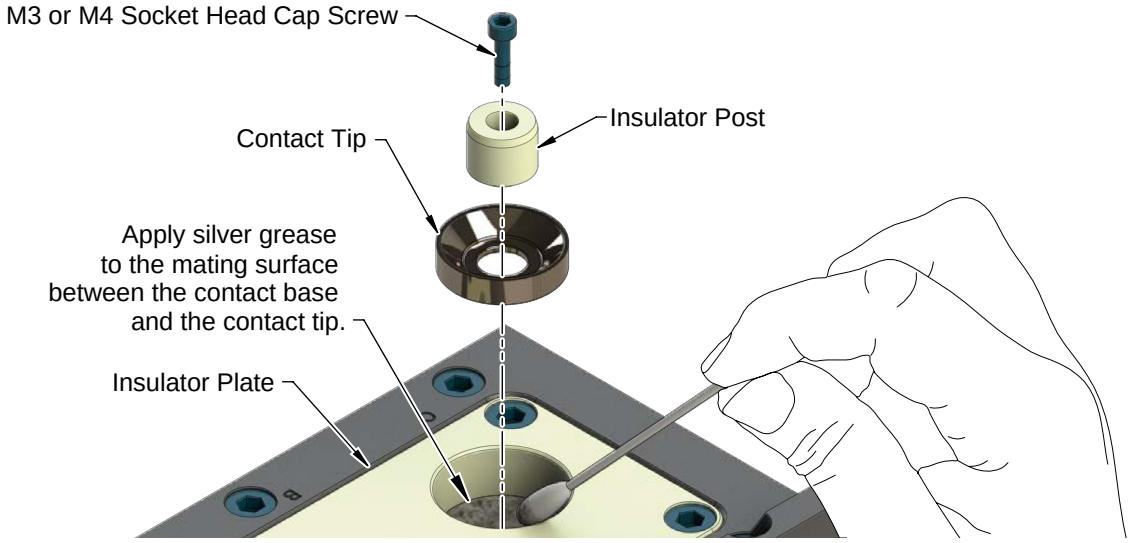

Installation:

NOTICE: Always replace Master and Tool contact tips at the same time (as pairs). Failure to change both halves of a mating pair will result in decreased life of the new component.

6. Apply a liberal amount of non-hardening, conductive silver bearing grease (ATI #0290-70-0000-50-008, McMaster-Carr #1219K57, AI Technology #ELGR8501 or equivalent) with a volume resistivity of 0.001 ohm-cm minimum to the mating surface between the contact base and the new contact tip. Insert the new contact tip into the insulator plate and reinstall the center insulator post.
7. For a M3 socket head cap screw, insert the screw into the insulator post and secure using a 2.5 mm hex key. Tighten to 10 in-lbs (1.1 Nm). For a M4 socket head cap screw, insert the screw into the insulator post and secure using a 3 mm hex key. Tighten to 12 in-lbs (1.36 Nm).
8. Safely resume normal operation.

.

5.2.2 Tool Module Contact Tip and Wave Spring Replacement

Parts required: *Refer to Section 8—Drawings*

Tools required: *2.5 mm hex key, torque wrench*

Supplies required: *Non-hardening, conductive silver bearing grease (ATI #0290-70-0000-50-008, McMaster-Carr #1219K57, AI Technology #ELGR8501 or equivalent)*

Removal:

1. Place the Tool in a secure location.
2. Uncouple the Master and Tool plates.
3. Turn off and de-energize all energized circuits (for example: electrical, pneumatic, and hydraulic circuits).
4. Remove the M3 socket head cap screw from the center of the Tool contact tip using a 2.5 mm hex key.
5. Remove the Tool contact tip and wave spring from the insulator plate and discard.

Figure 5.2—Tool Module Contact Tip and Wave Spring Replacement

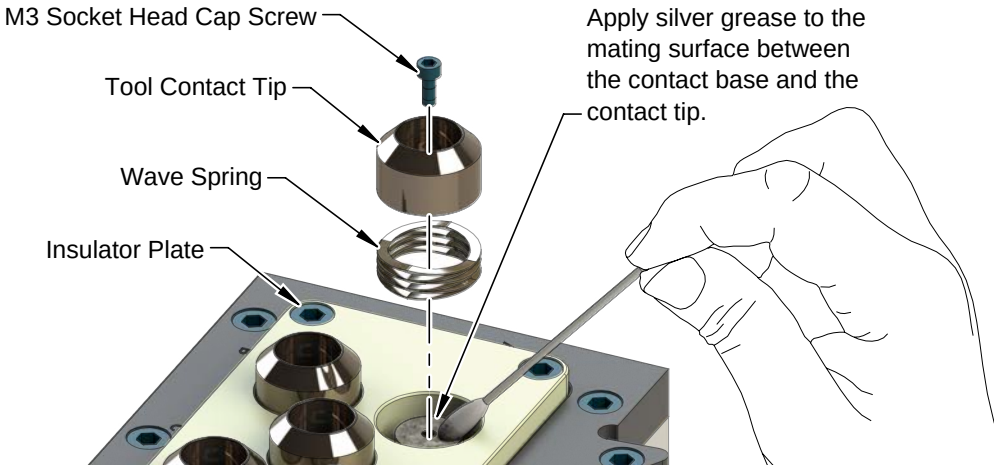

Installation:

NOTICE: Always replace Master and Tool contact tips at the same time (as pairs). Failure to change both halves of a mating pair will result in decreased life of the new component.

6. Apply a liberal amount of non-hardening, conductive silver bearing grease (ATI #0290-70-0000-50-008, McMaster-Carr #1219K57, AI Technology #ELGR8501 or equivalent) with a volume resistivity of 0.001 ohm-cm minimum to the mounting surface between the contact tip and the contact base.
7. Insert the new wave spring and contact tip into the insulator plate.
8. Insert the M3 socket head cap screw into the Tool contact tip and secure using a 2.5 mm hex key. Tighten to 10 in-lbs (1.1 Nm).
9. Safely resume normal operation.

5.2.3 Module Contact Base Replacement

Parts required: *Refer to Section 8—Drawings*

Tools required: *2.5 mm and 5 mm Allen wrench (hex key), 13/16 wrench, torque wrench*

1. Place the Tool in a secure location.
2. Uncouple the Master and Tool plates.
3. Turn off and de-energize all energized circuits (e.g. electrical, air, water, etc.).
4. Remove the module from the Tool Changer. Refer to *Section 2.3—Module Removal*.
5. Remove the contact tip from the contact base to be replaced. Refer to *Section 5.2.1—Master Module Contact Tip Replacement* and *Section 5.2.2—Tool Module Contact Tip and Wave Spring Replacement*.
6. To access the inside of the housings, remove the (4) M6 socket head cap screws that secure the fitting plate to the module cover and mounting block using a 5 mm Allen wrench.
7. Remove the (4) M6 socket head cap screws that secure the module cover to the mounting plate using a 5 mm Allen wrench. Remove the module cover.
8. Remove the (2) split-bolt cable clamps from the contact bases using a 13/16 wrench.
9. Remove the fitting plate and cables from the contact bases.
10. Remove the (4) M6 socket head cap screws that secure the insulator block to the mounting plate using a 5 mm Allen wrench.
11. Remove the insulator block from the mounting plate.

Figure 5.3—Removing the Insulator Block

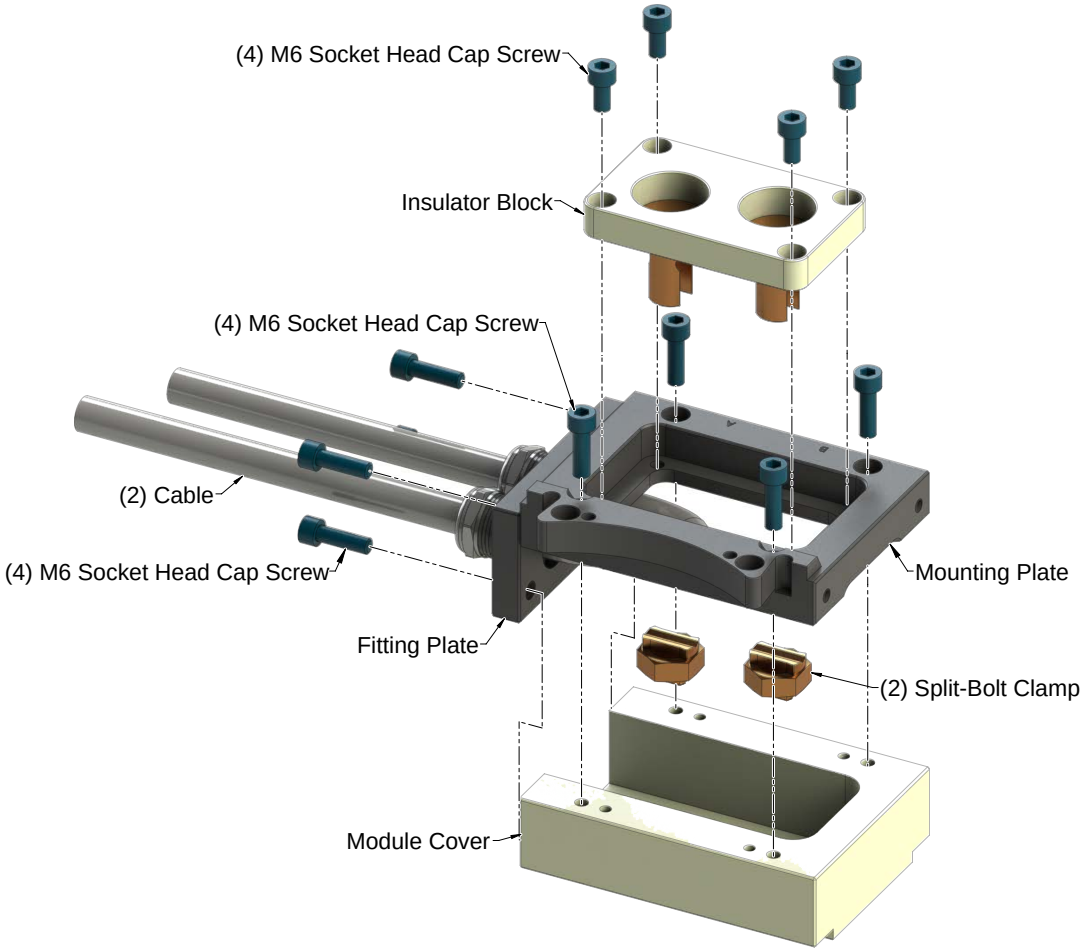

12. Remove the C-clip from the contact base being replaced. Refer to *Figure 5.4*.
13. Remove the M4 set screw that secures the dowel pin into the contact base using a 2.5 mm Allen wrench.
14. Tilt the insulator block to the side that allow the dowel pin to slide out.
15. Remove the contact base after the dowel pin has been completely removed.

Figure 5.4—Contact Base Replacement

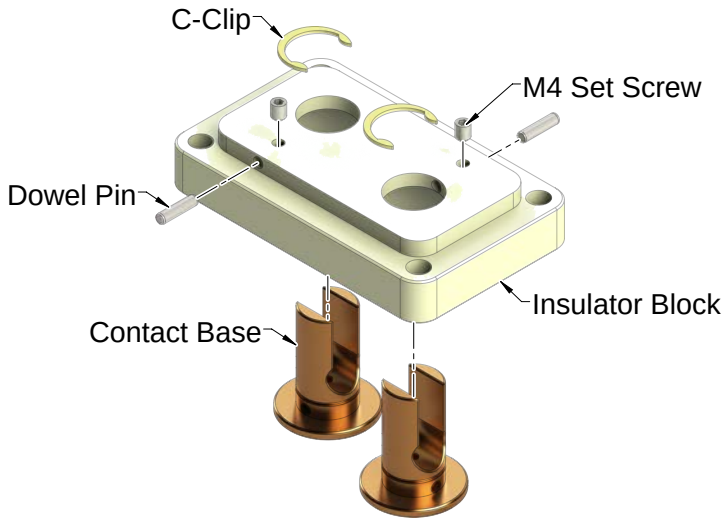

16. Install the new contact base into the insulator block in the correct orientation. Refer to *Figure 5.4*.
17. Install the dowel pin into the insulator block and that allow the dowel pin to slide into the corresponding hole in the contact base.
18. Apply Loctite 222 to the M4 set screw and install the to secure the dowel pin in place using a 2.5 mm Allen wrench. Note: the M4 set screw should flush with the surface of the insulator block when installed completely.
19. Install the C-clip onto the new contact base.
20. Install the insulator block into the mounting plate and secure with the (4) M6 socket head cap screws using a 5 mm Allen wrench. Tighten to 45 in-lbs (5.0 Nm).
21. Install the cables to the appropriate split-bolt contact bases.
22. Install the (3) split-bolt cable clamps to the split-bolt contact bases using a 13/16 wrench. Tighten securely [torque to 90 in-lbs (10 Nm) max.] after you have made sure that no loose wire filaments are protruding. Ensure that the clamping lug does not clamp on the cable insulation and that the entire clamp lug is contacting the copper wire.
23. Install the module cover onto the mounting plate.
24. Loosely install the (4) M6 socket head cap screws that secure the module cover and mounting plate to the fitting plate using a 5 mm Allen wrench.

Figure 5.5—Installing the Insulator Block

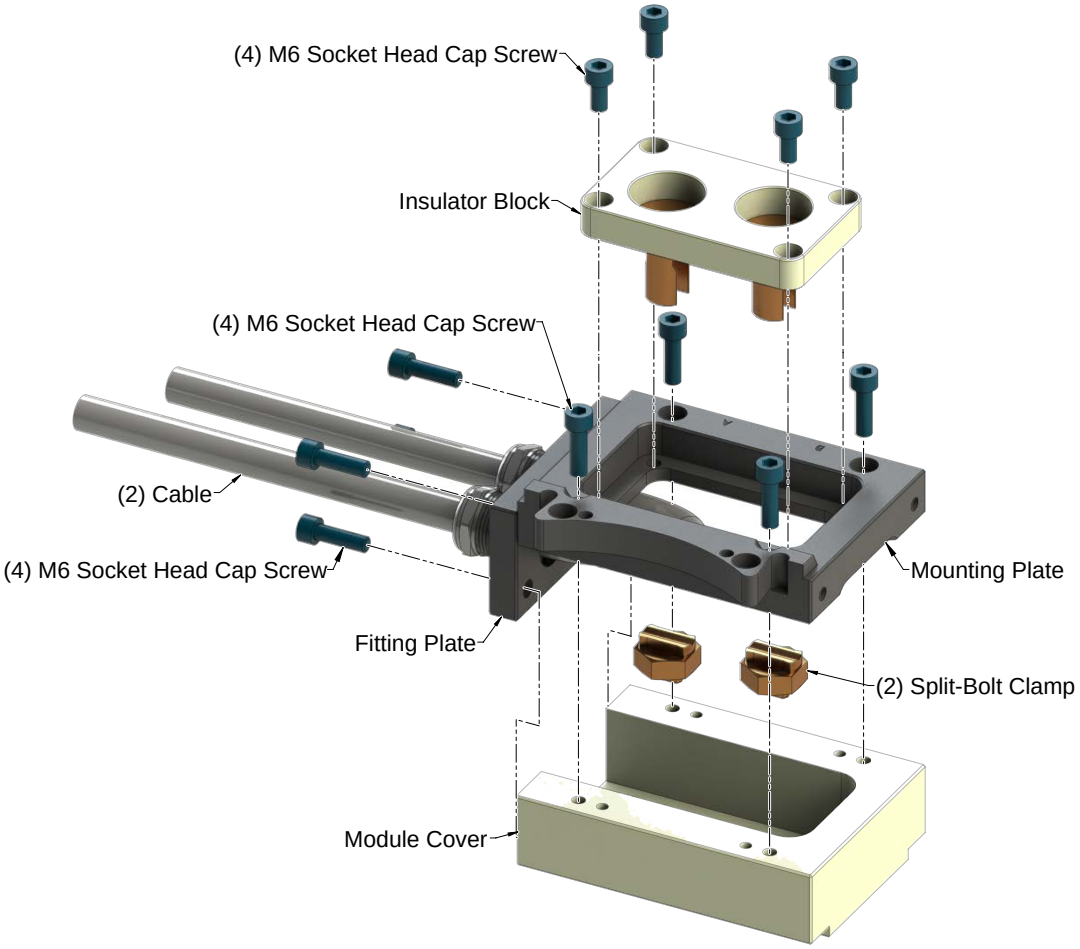

25. Install the (4) M6 socket head cap screws that secure the module cover to the mounting plate using a 5 mm Allen wrench. Tighten to 45 in-lbs (5.0 Nm).
26. Tighten the (4) M6 socket head cap screws that secure the fitting plate to the module to 45 in-lbs (5.0 Nm).

NOTICE: Apply non-hardening, conductive silver bearing grease (ATI 0290-70-0000-50-008, McMaster-Carr #1219K57, AI Technology #ELGR8501 or equivalent) with a volume resistivity of 0.001 ohm-cm or better to the mounting surface between the contact tip and the contact base.

27. Install the contact tip to the contact base to be replaced. Refer to *Section 5.2.1—Master Module Contact Tip Replacement* and *Section 5.2.2—Tool Module Contact Tip and Wave Spring Replacement*.
28. Install the module onto the Tool Changer. Refer to *Section 2.2—Module Installation*.
29. After the procedure is complete, resume normal operation.

5.2.4 V-ring Seal Replacement

Parts required: *Refer to Section 8—Drawings*
The seal protects the electrical connection between the Master and Tool module. Replace the seal if it becomes worn or damaged.

1. Place the Tool in a secure location.
2. Uncouple the Master and Tool plates.
3. Turn off and de-energize all energized circuits (for example: electrical, pneumatic, and hydraulic circuits).
4. To remove the existing seal, pinch the edge of the seal and pull the seal away from the pin block on the Master module.
5. To install a new seal, stretch the new seal over the shoulder of the pin block.
6. Push the seal hub down against the pin block.
7. Safely resume normal operation.

Figure 5.6—V-ring Seal Replacement

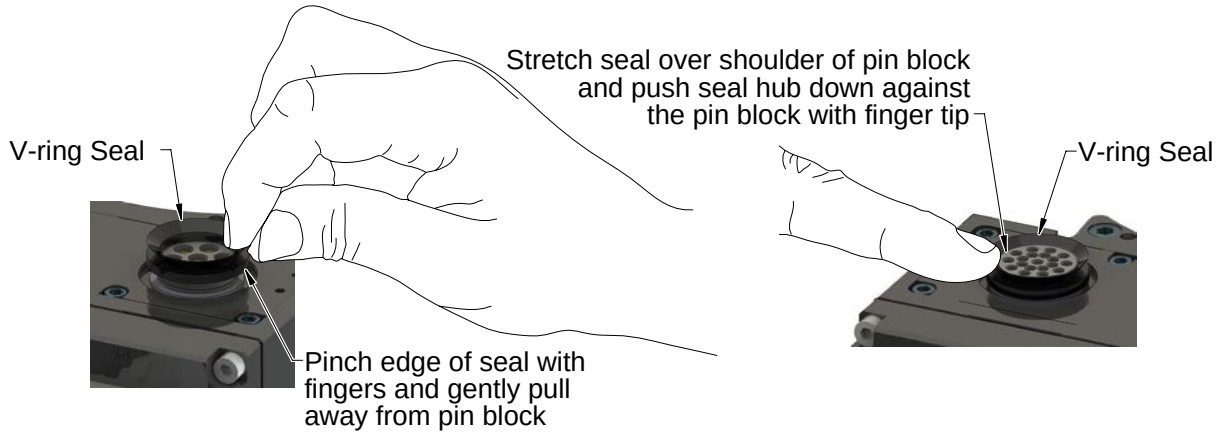

6. Serviceable Parts

Refer to *Section 8—Drawings.*

Table 6.1—Master Module Mounting Fasteners	
Part Number	**Description**
3500-1066020-21A	M6 x 20 Socket Head Cap Screw, SS, ND Microspheres, 0-3 uncoated lead thds. 5-7 coated thds. IFI525

Table 6.2—Tool Module Mounting Fasteners	
Part Number	**Description**
3500-1066016-21A	M6 x 16 Socket Head Cap Screw, DIN 912 A4 S/S (316) ND Ind. Microspheres Epoxy, Yellow. 0-3 uncoated lead thds. 5-7 coated thds.

Table 6.3—Accessories	
Part Number	**Description**
3690-0000064-60	Brush, Blue Nylon All Purpose (Contact Pin Cleaning)

7. Specifications

7.1 PB2 Specifications

Table 7.1—Master Module	
9121-PB2-M	Primary Current Master, (2) contacts, #2 wire, 200 A rating
Interface Connections	(2) Power Contacts
Electrical Rating	200 A, 600 V Max. Plated, conical contacts, No-Touch on the Master side.
Cable Sizes Supported	# 2 thru 00 AWG (Others, Contact ATI) Split-bolt terminals are used to attach the conductor to the contact post.
Weight	2.3 lbs. (1.04 kg)

Table 7.2—Tool Module	
9121-PB2-T	Primary Current Tool, (2) contacts, #2 wire, 200 A rating
Interface Connections	(2) Power Contacts
Electrical Rating	200 A, 600 V Max. Plated, conical contacts, No-Touch on the Master side.
Cable Sizes Supported	# 2 thru 00 AWG High-flex type with fine stranding (Others, Contact ATI) Split-bolt terminals are used to attach the conductor to the contact post.
Weight	2.3 lbs. (1.04 kg)

7.2 PB3 Specifications

Table 7.3—Master Module	
9121-PB3-M	Primary Current Master Mod w/2 1/2 NPT for Cord Grips
Interface Connections	(2) Power Contacts
Electrical Rating	200 A, 600 V Max. Plated, conical contacts, No-Touch on the Master side.
Cable Sizes Supported	# 2 thru 00 AWG (Others, Contact ATI) Split-bolt terminals are used to attach the conductor to the contact post.
Weight	2.3 lbs. (1.04 kg)

Table 7.4—Tool Module	
9121-PB3-T	Primary Current Tool Mod w/2 1/2 NPT for Cord Grips
Interface Connections	(2) Power Contacts
Electrical Rating	200 A, 600 V Max. Plated, conical contacts, No-Touch on the Master side.
Cable Sizes Supported	# 2 thru 00 AWG High-flex type with fine stranding (Others, Contact ATI) Split-bolt terminals are used to attach the conductor to the contact post.
Weight	2.3 lbs. (1.04 kg)

7.3 PB4 Specifications

Table 7.5—Master Module	
9121-PB4-M	Primary Current Master, (1) contacts, #2 wire, 200 A rating
Interface Connections	(1) Power Contacts
Electrical Rating	200 A, 600 V Max. Plated, conical contacts, No-Touch on the Master side.
Cable Sizes Supported	# 2 thru 00 AWG (Others, Contact ATI) Split-bolt terminals are used to attach the conductor to the contact post.
Weight	2.3 lbs. (1.04 kg)

Table 7.6—Tool Module	
9121-PB4-T	Primary Current Tool, (1) contacts, #2 wire, 200 A rating
Interface Connections	(1) Power Contacts
Electrical Rating	200 A, 600 V Max. Plated, conical contacts, No-Touch on the Master side.
Cable Sizes Supported	# 2 thru 00 AWG High-flex type with fine stranding (Others, Contact ATI) Split-bolt terminals are used to attach the conductor to the contact post.
Weight	2.3 lbs. (1.04 kg)

7.4 PB5 Specifications

Table 7.7—Master Module	
9121-PB5-M	Primary Current Master module with (1) Contact, 4 AWG Wire, 150 A Rating
Interface Connections	(1) Power Contacts
Electrical Rating	150 A, 600 V Max. Plated, conical contacts, No-Touch on the Master side.
Cable Sizes Supported	# 4 AWG (Others, Contact ATI) Split-bolt terminals are used to attach the conductor to the contact post.
Weight	2.3 lbs. (1.04 kg)

Table 7.8—Tool Module	
9121-PB5-T	Primary Current Tool module with (1) Contact, 4 AWG Wire, 150 A Rating
Interface Connections	(1) Power Contacts
Electrical Rating	150 A, 600 V Max. Plated, conical contacts, No-Touch on the Master side.
Cable Sizes Supported	# 4 AWG High-flex type with fine stranding (Others, Contact ATI) Split-bolt terminals are used to attach the conductor to the contact post.
Weight	2.3 lbs. (1.04 kg)

8. Drawings

Drawings are available on the *ATI website* or by contacting an ATI representative.