Table of Contents

F. High-Current Modules F-2
PC2—High-Current Module F-2
1. Product Overview F-2
2. Installation F-4
2.1 Module Cable Installation F-4
2.2 Module Installation F-8
2.3 Module Removal F-8
3. Operation F-9
4. Maintenance F-10
5. Troubleshooting and Service Procedures F-11
5.1 Troubleshooting F-11
5.1.1 Troubleshooting Sequence F-12
5.2 Service Procedures F-13
5.2.1 Master Module Contact Tip Replacement F-13
5.2.2 Tool Module Contact Tip and Wave Spring Replacement F-14
5.2.3 Module Contact Base Replacement F-15
5.2.4 Tubular Seal Replacement F-17
6. Serviceable Parts F-18
7. Specifications F-18
8. Drawings F-19

F. High-Current Modules

PC2—High-Current Module

1. Product Overview

The high-current modules are designed to carry high-current from a power supply to customer tooling. They consist of (3) plated copper contacts, each capable of carrying 200 Amps when coupled. The voltage should not exceed 600 Volts. Power must be off when coupling and uncoupling. In addition, the installation of over-current protection in the primary power supply circuit is recommended.

DANGER: This module has a voltage of 50V or greater; always remove power before contacting the module. Arcing and damage occur if power is not removed from the module during maintenance or service. Always remove power before attaching or disconnecting cables, separating or inserting the mating couplers, or making any contact with the Tool Changer or Utility Coupler.

CAUTION: To avoid damage to the contacts, never uncouple the unit without first disconnecting and discharging the power that passes through these pins. This is especially true when using high voltage circuits.

The high-current modules use advanced, patented, cone-mating technology to transfer current from the Master to the Tool. The mating conical surfaces provide a large contact area, excellent alignment capability, and enable efficient coupling/uncoupling without high spring forces or excessive wear. If required, the contact tips on either the Master or Tool can be replaced without removing the wiring.

The contact tips on the Master side are recessed below the surface and contain a central insulated post. The modules were designed so that the finger of an average human adult cannot touch the metallic parts. The center contact is designed to engage first and break last and is intended for use as a ground contact.

The high current tool module provides compliant motion in the power contacts, ATI requires the use of high-flex type with fine stranding cables and proper strain relief to allow for 4 mm of motion as specified in *Section 8—Drawings*.

Figure 1.1 —PC2 Modules



When a PC2-T module is not used on the Tool-side, a 9121-PAD-T may be supplied (per customer request) to protect the Master side power module from dust, debris, and weld spatter.

Figure 1.2—Protective Cover for Tool-side (PAD-T)

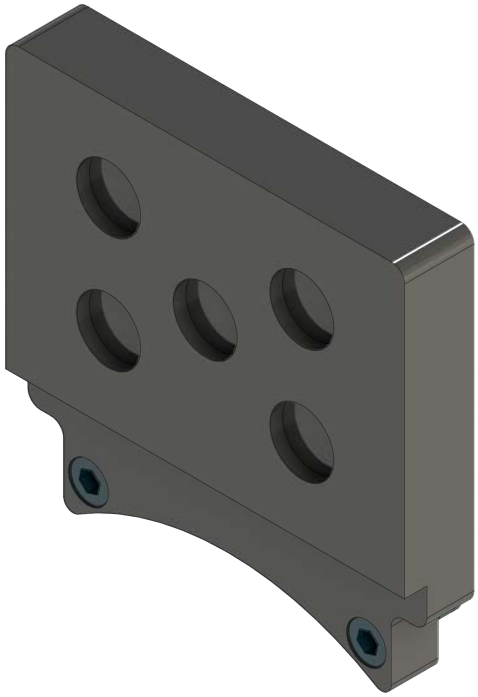

A fitting plate is be required to support a customer supplied strain relief fitting to grip the customer supplied cables many different configuration are available contact ATI for availability. A (9005-20-1396) blank fitting plate is available when cabling to one side or the other is not required.

Figure 1.3—Fitting Plate

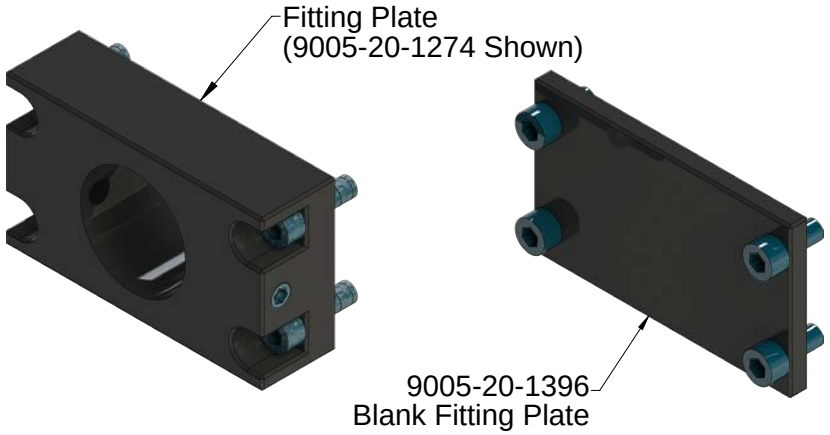

2. Installation

The PC2 modules have (3) high-current electrical contacts. A fitting plate may be specified at the time of the order to support a customer supplied strain relief fitting. Once the fitting plate is installed on the modules, the prepared cable ends are fed through the strain relief and into the modules where the conductors are attached to the contact bases. The center contact is designed to engage first and break last and is intended for use as a ground contact. For ease of cable installation, it is recommended that the modules be removed from the Tool Changer.

The high-current modules are typically installed by ATI prior to shipment. The following steps outline field installation or removal as required. These steps also detail connecting cables to the contacts.



DANGER: This module has a voltage of 50V or greater; always remove power before contacting the module. Arcing and damage occur if power is not removed from the module during maintenance or service. Always remove power before attaching or disconnecting cables, separating or inserting the mating couplers, or making any contact with the Tool Changer or Utility Coupler.



WARNING: Do not perform maintenance or repair(s) on the Tool Changer or modules unless the Tool is safely supported or placed in the tool stand, all energized circuits (for example: electrical, air, water, etc.) are turned off, pressurized connections are purged and power is discharged from circuits in accordance with the customer specific safety practices and policies. Injury or equipment damage can occur with the Tool not placed and energized circuits on. Place the Tool in the tool stand, turn off and discharge all energized circuits, purge all pressurized connections, and verify all circuits are de-energized before performing maintenance or repair(s) on the Tool Changer or modules.



CAUTION: Do not use stiff, heavy stranded cables which can inhibit operation of the high current module. Stiff cables can prevent compliant motion of the contacts and cause an intermittent or improper power connection. Operation of the high current module requires the customer supplied cables to be high-flex type with fine stranding and sufficient strain relief to allow free cable motion.



CAUTION: Thread locker applied to fasteners must not be used more than once. Fasteners might become loose and cause equipment damage. Always apply new thread locker when reusing fasteners.

2.1 Module Cable Installation

Tools required: *2 mm, 4 mm, and 5 mm Allen® wrenches (hex key), 13/16 socket wrench, torque wrench, wire stripper, heat gun,*

Supplies required: *heat shrink*

1. If already installed on the Tool Changer, remove the (2) M6 socket head cap screws that secure the module to the Tool Changer using a 5 mm Allen wrench. Lift the module assembly off the Tool Changer body.
2. Using a 5 mm Allen wrench, remove the (4) M6 socket head cap screws that secure the fitting plate to the cover and the mounting plate. Remove the fitting plate.
3. Using a 5 mm Allen wrench, remove the (6) M6 socket head cap screws that secure the module cover to the mounting plate and remove the module cover.
4. Remove the (5) split-bolt cable clamps using a 13/16 socket wrench.

Figure 2.1—Remove the Module Fitting Plates and Cover

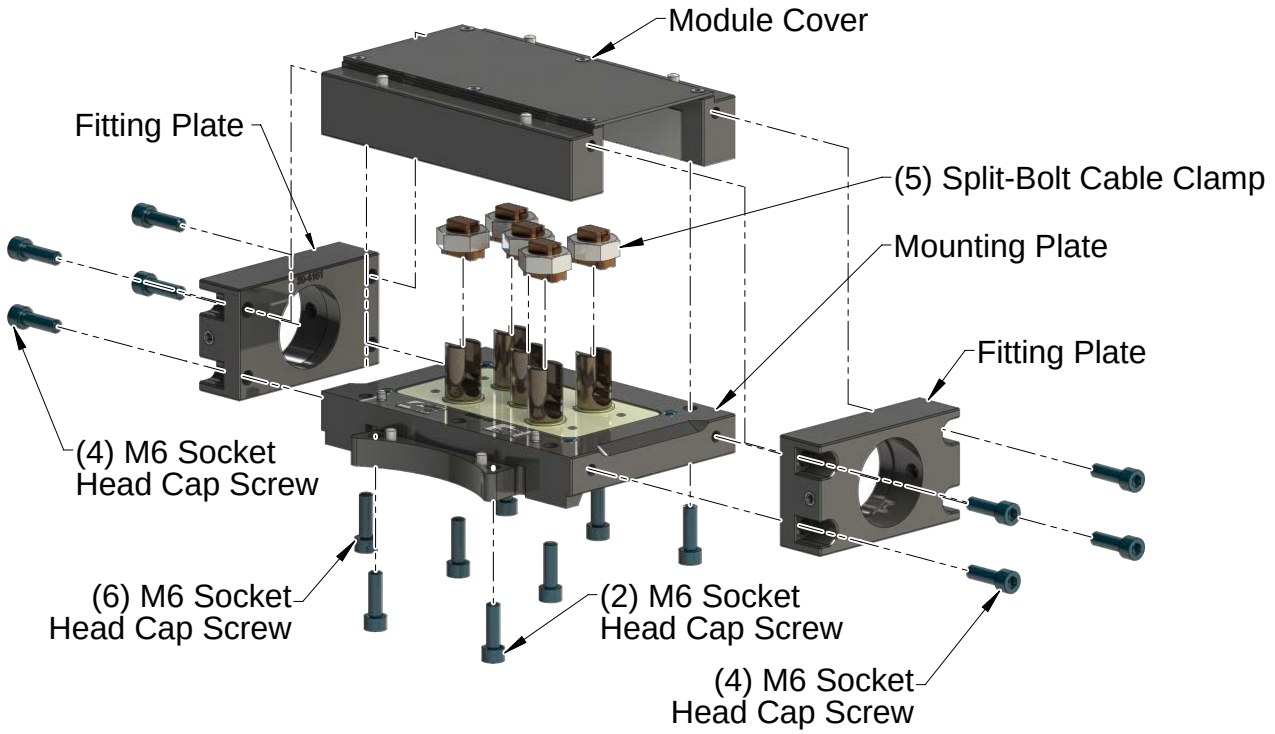

5. Insert the customer supplied strain relief fittings (with lock nut) into the fitting plates.
6. Orient the strain relief fittings as desired and tighten the (2) M8 set screws against the strain fitt'sing threads using a 6 mm Allen wrench.
7. Use an appropriate tool and tighten the strain relief lock nut to the front face of the fitting plate, which provides more fitting retention than the set screws alone.
8. Use (2) of the M6 socket head cap screws to attach each of the fitting plates to the desired end of the mounting plate. Leave these screws slightly loose at this time.

Figure 2.2—Install the Customer Supplied Cables

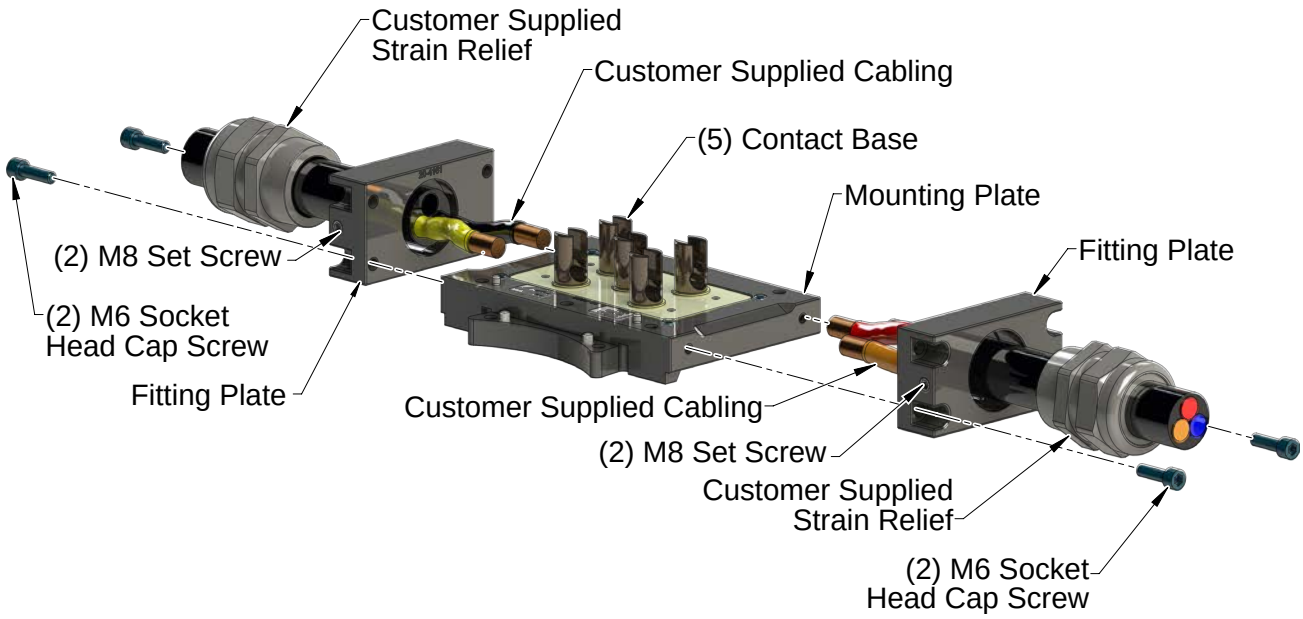

CAUTION: Do not use stiff, heavy stranded cables which can inhibit operation of the high current module. Stiff cables can prevent compliant motion of the contacts and cause an intermittent or improper power connection. Operation of the high current module requires the customer supplied cables to be high-flex type with fine stranding and sufficient strain relief to allow free cable motion.

9. Feed the cable(s) through the customer supplied strain relief fitting(s) and prepare the cable ends by stripping the insulation back approximately 3/4" (19 mm). Be careful not cut individual strands while stripping the cable insulation.

Figure 2.3—Wire Stripping and Clamping

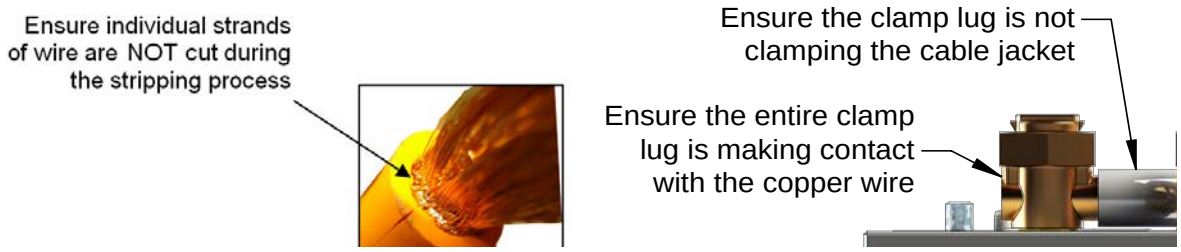

10. Insert each prepared cable end into the appropriate contact base and replace the split-bolt nut. Make sure that no loose wire filaments are protruding from the contact bases. Also, ensure that the clamping lugs are not clamped on the cable insulation and that the entire clamp lug is contacting the copper wire. Tighten to 90 in-lbs (10 Nm) using a 13/16 socket wrench.

NOTICE: When routing cables inside the module, be sure that the cables and cable insulation do not contact the other contact bases. Contact could cause short or damage to cable insulation.

11. Install the module cover to the mounting plate, loosely install the (2) M6 socket head cap screws that secure the fitting plate to the module cover using a 5 mm Allen wrench.
12. Install the (6) M6 socket head cap screws that secure the module cover to the mounting plate and tighten to 45 in-lbs (5.0 Nm).
13. Tighten the (4) M6 socket head cap screws that secure the fitting plate to the module to 45 in-lbs (5.0 Nm) using a 5 mm Allen wrench.
14. Install the module onto the Tool Changer. Refer to *Section 2.2—Module Installation*.

Figure 2.4—Module, Fitting Plate, and Strain Relief

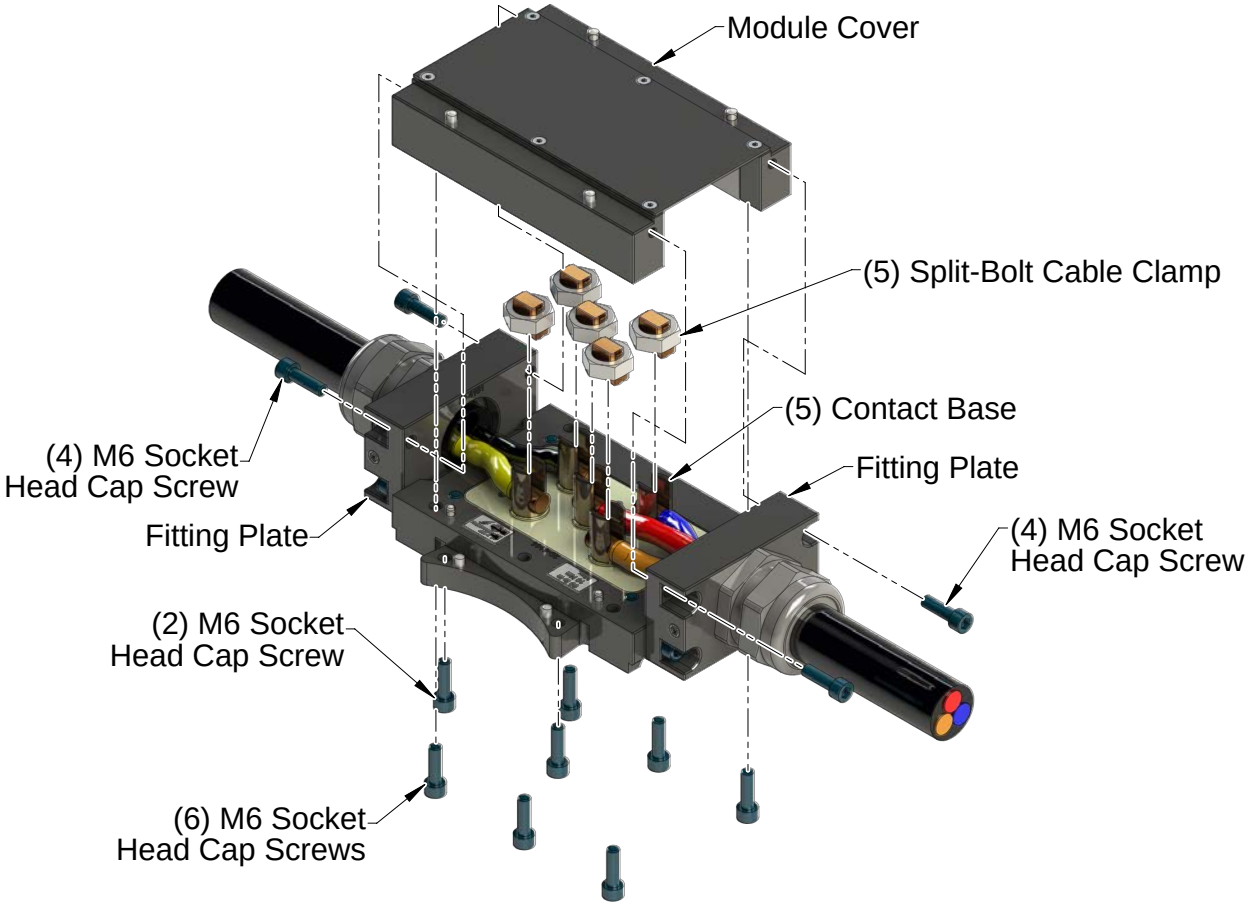

2.2 Module Installation

Tools required: *5 mm Allen wrench (hex key)*

Supplies required: *Clean rag, Loctite® 242*

1. Clean the mating surfaces.
2. Using the ledge feature, place the module into the appropriate location on the Tool Changer body. Align the module with the Tool Changer using the dowels in the bottom of the ledge feature. Refer to *Figure 2.5*.
3. Apply Loctite 242 to the supplied M6 socket head cap screws.
4. Install the (2) M6 socket head cap screws that secure the module to the Tool Changer and tighten to 70 in-lbs (7.9 Nm) using a 5 mm Allen wrench.
5. Connect the power connections to the module. Ensure that the connectors are cleaned prior to being secured.
6. After the procedure is complete, resume normal operation.

Figure 2.5—Module Installation

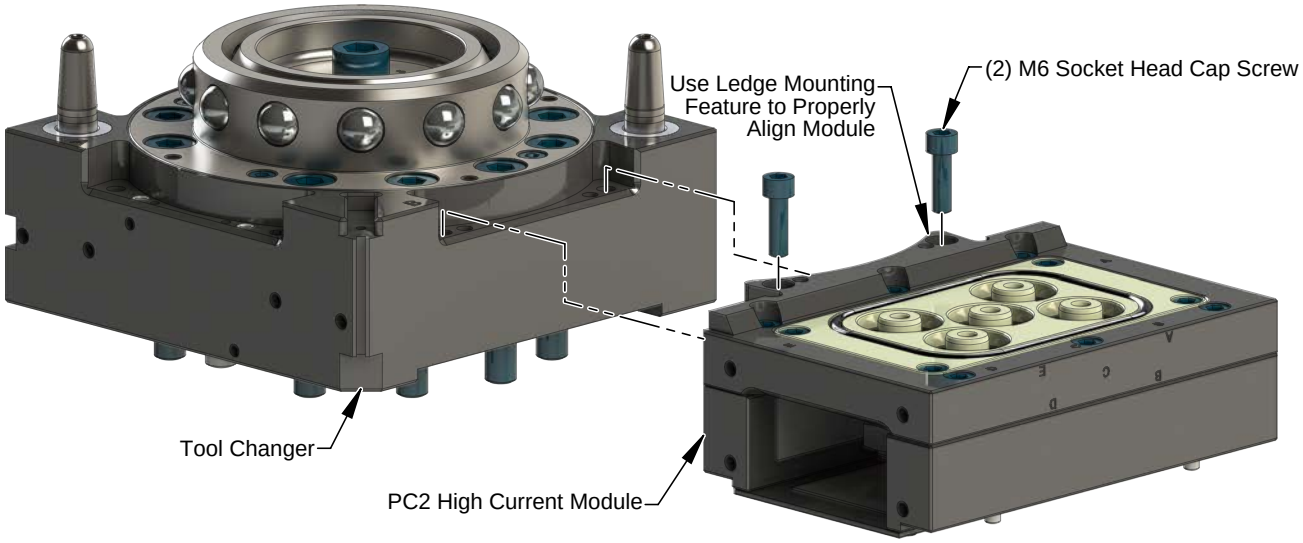

2.3 Module Removal

Tools required: *5 mm Allen wrench (hex key)*

1. Place the Tool in a secure location.
2. Uncouple the Master and Tool plates.
3. Turn off and de-energize all energized circuits (e.g. electrical, air, water, etc.).
4. Prior to removing the module, use a marker pen to scribe a line or indication between the Tool Changer and module body as a reminder where the module is to be re-installed.
5. Depending upon the service or repair being done, utilities and connections to the module may or may not need to be disconnected.
6. Remove the socket head cap screws and lift the module from the Tool Changer.

3. Operation

High-current modules carry large currents to various industrial devices and provide a separable joint in the power wiring. To maximize the service life of these components, the following points must be observed:

WARNING: The contacts are not a switch. For safety and to prevent equipment damage, disconnect and drain all power before coupling or uncoupling the Tool Changer or Utility Coupler.

CAUTION: Do not couple or uncouple the high-current modules unless electrical power has been disconnected and discharged both upstream and downstream from the modules. Arcing and contact damage will occur. Remove power and discharge both upstream and downstream modules before coupling or uncoupling modules.

CAUTION: Improper cable routing can result in wires and cables being pinched in the joint between the Tool Changer plates and premature failure of the electrical connectors. Properly route and secure all cables, particularly on the Master side.

CAUTION: Always protect the un-used Tool modules when not coupled to a Master module. Dust, debris, and weld spatter can contaminate the contact tips, which can cause arcing and a significant decrease in contact life.

CAUTION: Do not use stiff, heavy stranded cables which can inhibit operation of the high current module. Stiff cables can prevent compliant motion of the contacts and cause an intermittent or improper power connection. Operation of the high current module requires the customer supplied cables to be high-flex type with fine stranding and sufficient strain relief to allow free cable motion.

4. Maintenance

Once installed, the operation of the high-current current modules is generally trouble-free. Periodically, the condition of the contacts should be checked. Any contamination on the contacts should be removed using a stiff nylon brush. During inspection, ensure that the fasteners attaching the modules to the Tool Changer bodies are secure.

The modules may be field serviced as needed. The following list describes how to perform various operations.



DANGER: This module has a voltage of 50V or greater; always remove power before contacting the module. Arcing and damage occur if power is not removed from the module during maintenance or service. Always remove power before attaching or disconnecting cables, separating or inserting the mating couplers, or making any contact with the Tool Changer or Utility Coupler.



WARNING: Do not perform maintenance or repair(s) on the Tool Changer or modules unless the Tool is safely supported or placed in the tool stand, all energized circuits (for example: electrical, air, water, etc.) are turned off, pressurized connections are purged and power is discharged from circuits in accordance with the customer specific safety practices and policies. Injury or equipment damage can occur with the Tool not placed and energized circuits on. Place the Tool in the tool stand, turn off and discharge all energized circuits, purge all pressurized connections, and verify all circuits are de-energized before performing maintenance or repair(s) on the Tool Changer or modules.

- Inspect that mounting fasteners are tight, and if loose, tighten to the proper torque. Refer to *Section 2.2—Module Installation.*
- Cable connections should be inspected during maintenance periods, to ensure they are secure. Loose connections should be cleaned and re-tightened . Inspect cable sheathing for damage, repair or replace damaged cabling. Loose connections or damaged cabling are not expected and may indicate improper routing and/or strain relieving.
- Inspect the Master and Tool contact tips for pin damage, debris or darkened pins. Refer to *Section 5.2.1—Master Module Contact Tip Replacement* and *Section 5.2.2—Tool Module Contact Tip and Wave Spring Replacement*.
- Inspect seal for wear, abrasion, and cuts. If worn or damaged, replace. Refer to *Section 5.2.4—Tubular Seal Replacement.*

5. Troubleshooting and Service Procedures

The following section provides troubleshooting and service information to help diagnose conditions and repair the high-current module.

DANGER: This module has a voltage of 50V or greater; always remove power before contacting the module. Arcing and damage occur if power is not removed from the module during maintenance or service. Always remove power before attaching or disconnecting cables, separating or inserting the mating couplers, or making any contact with the Tool Changer or Utility Coupler.

WARNING: Do not perform maintenance or repair(s) on the Tool Changer or modules unless the Tool is safely supported or placed in the tool stand, all energized circuits (for example: electrical, air, water, etc.) are turned off, pressurized connections are purged and power is discharged from circuits in accordance with the customer specific safety practices and policies. Injury or equipment damage can occur with the Tool not placed and energized circuits on. Place the Tool in the tool stand, turn off and discharge all energized circuits, purge all pressurized connections, and verify all circuits are de-energized before performing maintenance or repair(s) on the Tool Changer or modules.

5.1 Troubleshooting

The high-current modules provide a separable joint in the cabling between power sources and industrial devices. Failure of the industrial devices to operate for any reason must be diagnosed electrically.

Table 5.1—Troubleshooting

Symptom	Possible Cause	Correction
Power intermittently functioning or not functioning at all	Object trapped between modules	Remove the object, then re-attempt coupling.
	Contact Contamination due to environment	Ensure that the spring loaded contacts on the Tool-side can move freely and are not bound by debris. Clean the spring pins to restore free operation. Clean Tool-side module contacts, refer to *Section 5.2.2—Tool Module Contact Tip and Wave Spring Replacement*. Inspect seal, replace If damaged refer to *Section 5.2.4—Tubular Seal Replacement*
	Contact Pin Separation	Any contamination on the contacts should be removed using a stiff nylon brush.
		Air supplied to Tool Changer insufficient, Improper valve used. Refer to Tool Changer manual for pneumatic requirements.
	Module Contact Damage due to Coupling/Uncoupling under load.	Revise operating procedures to only couple/uncouple with power disconnected and discharged. Replace module contacts, refer to *Section 5.2.1—Master Module Contact Tip Replacement* and *Section 5.2.2—Tool Module Contact Tip and Wave Spring Replacement* for Tool module
	Rigid customer cable connection to module termination	Change to high-flex, fine strand cables to terminate to high current module. Route and properly restrain cables to allow for 4 mm of motion on the Tool side.
	Cable damage - Pinched, torn, or fatigued cables, contact base, or contact spring worn out or damaged.	Inspect cables and contact base for damage, test cables, test contact springs, refer to *Section 5.1.1—Troubleshooting Sequence*

5.1.1 Troubleshooting Sequence



DANGER: This module has a voltage of 50V or greater; always remove power before contacting the module. Arcing and damage occur if power is not removed from the module during maintenance or service. Always remove power before attaching or disconnecting cables, separating or inserting the mating couplers, or making any contact with the Tool Changer or Utility Coupler.

The following sequence is recommended for troubleshooting primary current problems:

1. First examine all the cables, cable connectors, and power sources for problems and correct as necessary.
2. Use a known good cable to bypass the modules and directly connect the supply to the load.
3. If the load does not operate properly with known good cables, the problem is in the supply or load. Troubleshoot these components using that manufacturer's procedures.
4. If the load operates properly, use the known good cables from the step 2 to connect between the supply and Master module. Use a second set of the known good cables to connect the Tool module to the load.
5. If the load operates properly, the problem is in the old cables, which must be repaired or replaced.
6. If the load does not operate properly, the problem is in the high-current modules.
7. Externally, examine the modules for loose, missing, or damaged contacts replacing and tightening as necessary.
8. Remove the covers from the modules and insure that the cables have not come loose from the contact bases. Re-secure the cables as necessary. Refer to the cable installation section.
9. Use a hardwood dowel or other non-metallic, soft rod to push axially on the tool side contacts to verify free axial motion. If the springs under these contacts do not allow axial motion of the contacts, replace the springs accordingly as outlined above in the maintenance section.

If the above steps fail to restore proper operation contact ATI for service.

5.2 Service Procedures

The following service procedures provide instructions for component replacement.

5.2.1 Master Module Contact Tip Replacement

Parts required: *Refer to Section 8—Drawings.*

Tools required: *2.5 mm or 3 mm hex key, torque wrench*

Supplies required: *Non-hardening, conductive silver bearing grease (ATI #0290-70-0000-50-008, McMaster-Carr #1219K57, AI Technology #ELGR8501 or equivalent)*

Removal:

1. Place the Tool in a secure location.
2. Uncouple the Master and Tool plates.
3. Turn off and de-energize all energized circuits (for example: electrical, pneumatic, and hydraulic circuits).
4. Remove the M3 or M4 socket head cap screw from the center of the insulator post using a 2.5 mm or 3 mm hex key.
5. Remove the insulator post and the Master contact tip. Discard the contact tip.

Figure 5.1—Master Module Contact Tip Replacement

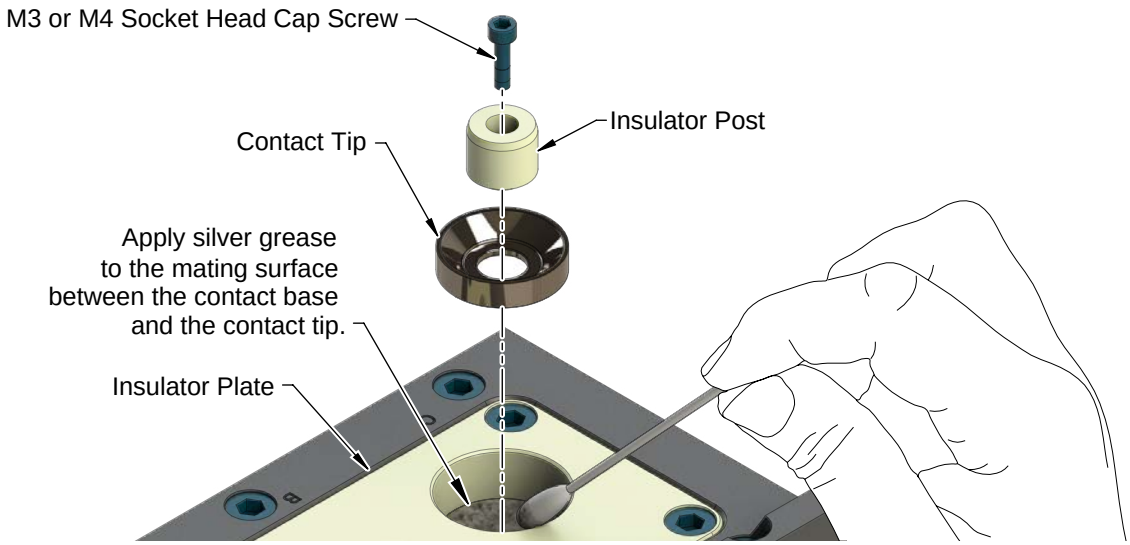

Installation:

NOTICE: Always replace Master and Tool contact tips at the same time (as pairs). Failure to change both halves of a mating pair will result in decreased life of the new component.

6. Apply a liberal amount of non-hardening, conductive silver bearing grease (ATI #0290-70-0000-50-008, McMaster-Carr #1219K57, AI Technology #ELGR8501 or equivalent) with a volume resistivity of 0.001 ohm-cm minimum to the mating surface between the contact base and the new contact tip. Insert the new contact tip into the insulator plate and reinstall the center insulator post.
7. For a M3 socket head cap screw, insert the screw into the insulator post and secure using a 2.5 mm hex key. Tighten to 10 in-lbs (1.1 Nm). For a M4 socket head cap screw, insert the screw into the insulator post and secure using a 3 mm hex key. Tighten to 12 in-lbs (1.36 Nm).
8. Safely resume normal operation.

.

5.2.2 Tool Module Contact Tip and Wave Spring Replacement

Parts required: *Refer to Section 8—Drawings.*

Tools required: *2.5 mm hex key, torque wrench*

Supplies required: *Non-hardening, conductive silver bearing grease (ATI #0290-70-0000-50-008, McMaster-Carr #1219K57, AI Technology #ELGR8501 or equivalent)*

Removal:

1. Place the Tool in a secure location.
2. Uncouple the Master and Tool plates.
3. Turn off and de-energize all energized circuits (for example: electrical, pneumatic, and hydraulic circuits).
4. Remove the M3 socket head cap screw from the center of the Tool contact tip using a 2.5 mm hex key.
5. Remove the Tool contact tip and wave spring from the insulator plate and discard.

Figure 5.2—Tool Module Contact Tip and Wave Spring Replacement

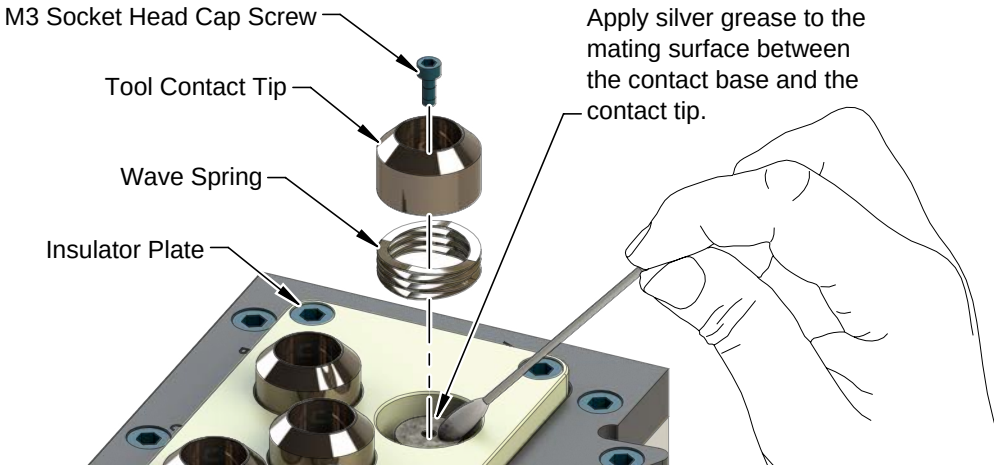

Installation:

NOTICE: Always replace Master and Tool contact tips at the same time (as pairs). Failure to change both halves of a mating pair will result in decreased life of the new component.

6. Apply a liberal amount of non-hardening, conductive silver bearing grease (ATI #0290-70-0000-50-008, McMaster-Carr #1219K57, AI Technology #ELGR8501 or equivalent) with a volume resistivity of 0.001 ohm-cm minimum to the mounting surface between the contact tip and the contact base.
7. Insert the new wave spring and contact tip into the insulator plate.
8. Insert the M3 socket head cap screw into the Tool contact tip and secure using a 2.5 mm hex key. Tighten to 10 in-lbs (1.1 Nm).
9. Safely resume normal operation.

5.2.3 Module Contact Base Replacement

Parts required: *Refer to Section 8—Drawings.*

Tools required: *3 mm or 5 mm Allen wrench (hex key), 13/16 socket wrench, torque wrench*

1. Place the Tool in a secure location.
2. Uncouple the Master and Tool plates.
3. Turn off and de-energize all energized circuits (e.g. electrical, air, water, etc.).
4. Remove the module from the Tool Changer. Refer to *Section 2.3—Module Removal*.
5. Using a 5 mm Allen wrench, remove the (4) M6 socket head cap screws that secure the fitting plate to the module cover.
6. Using a 5 mm Allen wrench, remove the (6) M6 socket head cap screws that secure the module cover to the mounting plate and remove the module cover.
7. Remove the (5) split-bolt cable clamps from the contact bases using a 13/16 socket wrench.

Figure 5.3—Remove the Module Cover and Split-Bolt Cable Clamps

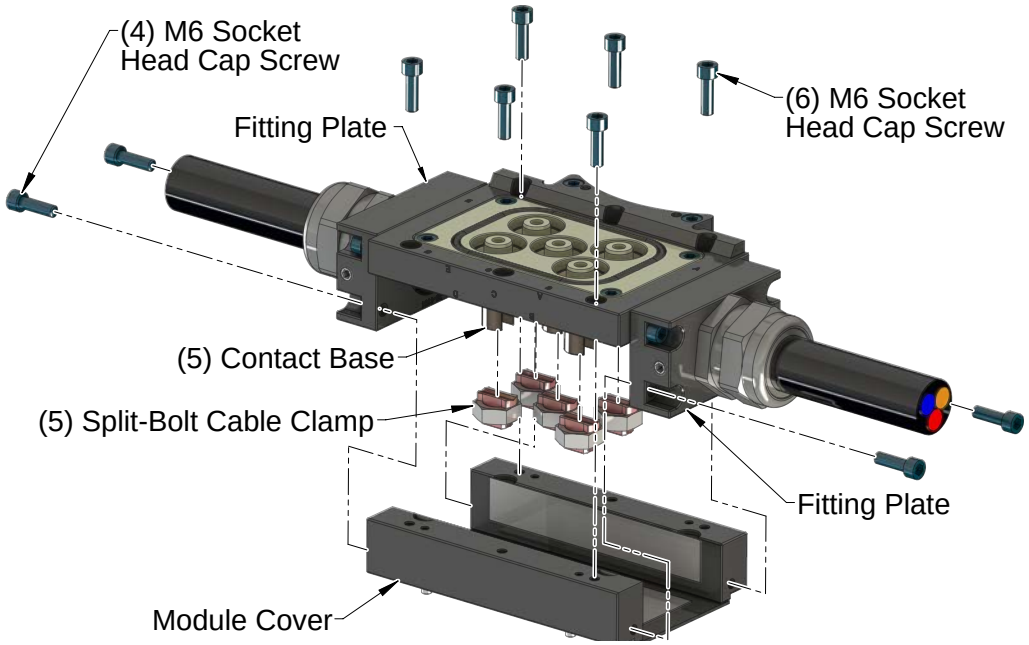

8. Remove the contact tips and springs from the contact base to be replaced. Refer to *Section 5.2.1—Master Module Contact Tip Replacement* and *Section 5.2.2—Tool Module Contact Tip and Wave Spring Replacement*.
9. Using a 5 mm Allen wrench, remove the (4) M6 socket head cap screws that secure the insulator block to the mounting plate.
10. Remove the insulator block from the mounting plate. Refer to *Figure 5.4*.
11. Remove the C-clip from the contact base being replaced.
12. Remove the M4 set screw that secures the dowel pin into the contact base using a 3 mm Allen wrench.
13. Tilt the insulator block to the side that allow the dowel pin to slide out.
14. Remove the contact base after the dowel pin has been completely removed.
15. Install the new contact base into the insulator block in the correct orientation. Refer to *Figure 5.4*.
16. Install the dowel pin into the insulator block and that allow the dowel pin to slide into the corresponding hole in the contact base.

Figure 5.4—Removing Insulator Block and Contact Bases

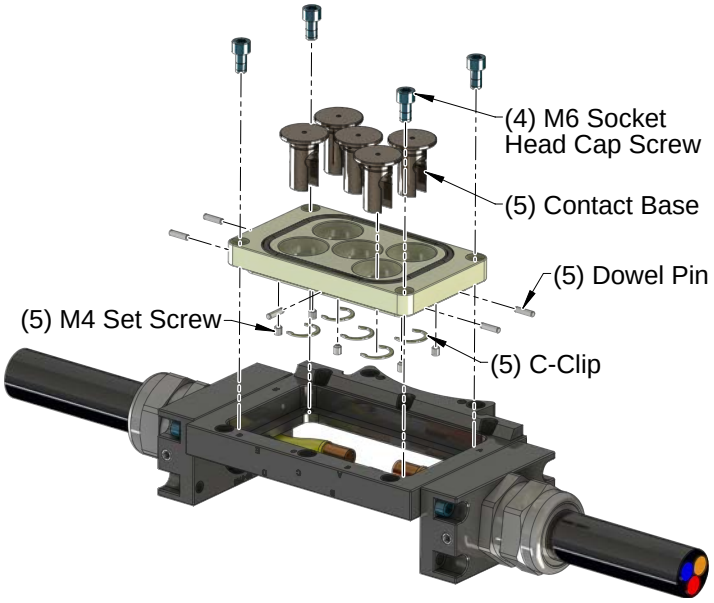

17. Apply Loctite 222 to the M4 set screw and install to secure the dowel pin in place. Note: the M4 set screw should flush with the surface of the insulator block when installed completely using a 3 mm Allen wrench.
18. Install the C-clip onto the new contact base.

> **CAUTION:** Do not use stiff, heavy stranded cables which can inhibit operation of the high current module. Stiff cables can prevent compliant motion of the contacts and cause an intermittent or improper power connection. Operation of the high current module requires the customer supplied cables to be high-flex type with fine stranding and sufficient strain relief to allow free cable motion.

19. Install the insulator block into the mounting plate and guide the cables into the appropriate contact bases.
20. Install the (4) M6 socket head cap screws to secure the insulator block to the mounting plate and tighten to 45 in-lbs (5.0 Nm) using a 5 mm Allen wrench.
21. Install the cables to the appropriate split-bolt contact bases.
22. Install the (5) split-bolt cable clamps to the split-bolt contact bases. Tighten securely [torque to 90 in-lbs (10 Nm) max.] using a 13/16 socket wrench after you have made sure that no loose wire filaments are protruding. Ensure that the clamping lug does not clamp on the cable insulation and that the entire clamp lug is contacting the copper wire.
23. Install the contact tip to the contact base to be replaced. Refer to *Section 5.2.1—Master Module Contact Tip Replacement* and *Section 5.2.2—Tool Module Contact Tip and Wave Spring Replacement*.
24. Install the module cover onto the mounting plate.
25. Loosely install the (4) M6 socket head cap screws that secure the module cover to the fitting plate.
26. Install the (6) M6 socket head cap screws that secure the module cover to the mounting plate and tighten to 45 in-lbs (5.0 Nm) using a 5 mm Allen wrench.
27. Tighten the (4) M6 socket head cap screws that secure the fitting plate to the module to 45 in-lbs (5.0 Nm) using a 5 mm Allen wrench.
28. Install the module onto the Tool Changer. Refer to *Section 2.2—Module Installation*.
29. After the procedure is complete, resume normal operation.

5.2.4 Tubular Seal Replacement

The tubular seal protects the electrical connection between the Master and Tool module. If the seal becomes worn or damaged, it needs to be replaced.

Parts required: *Refer to Section 8—Drawings.*

1. Place the Tool in a secure location.
2. Uncouple the Master and Tool plates.
3. Turn off and de-energize all energized circuits (e.g. electrical, air, water, etc.).
4. To replace the tubular seal on the Tool module, use a small screwdriver or similar to gently pry the seal out of the its retention groove.
5. To install a new seal, place it over the empty groove in the Tool side insulator plate and press the seal in place.
6. After the procedure is complete, resume normal operation.

Figure 5.5—Seal Replacement

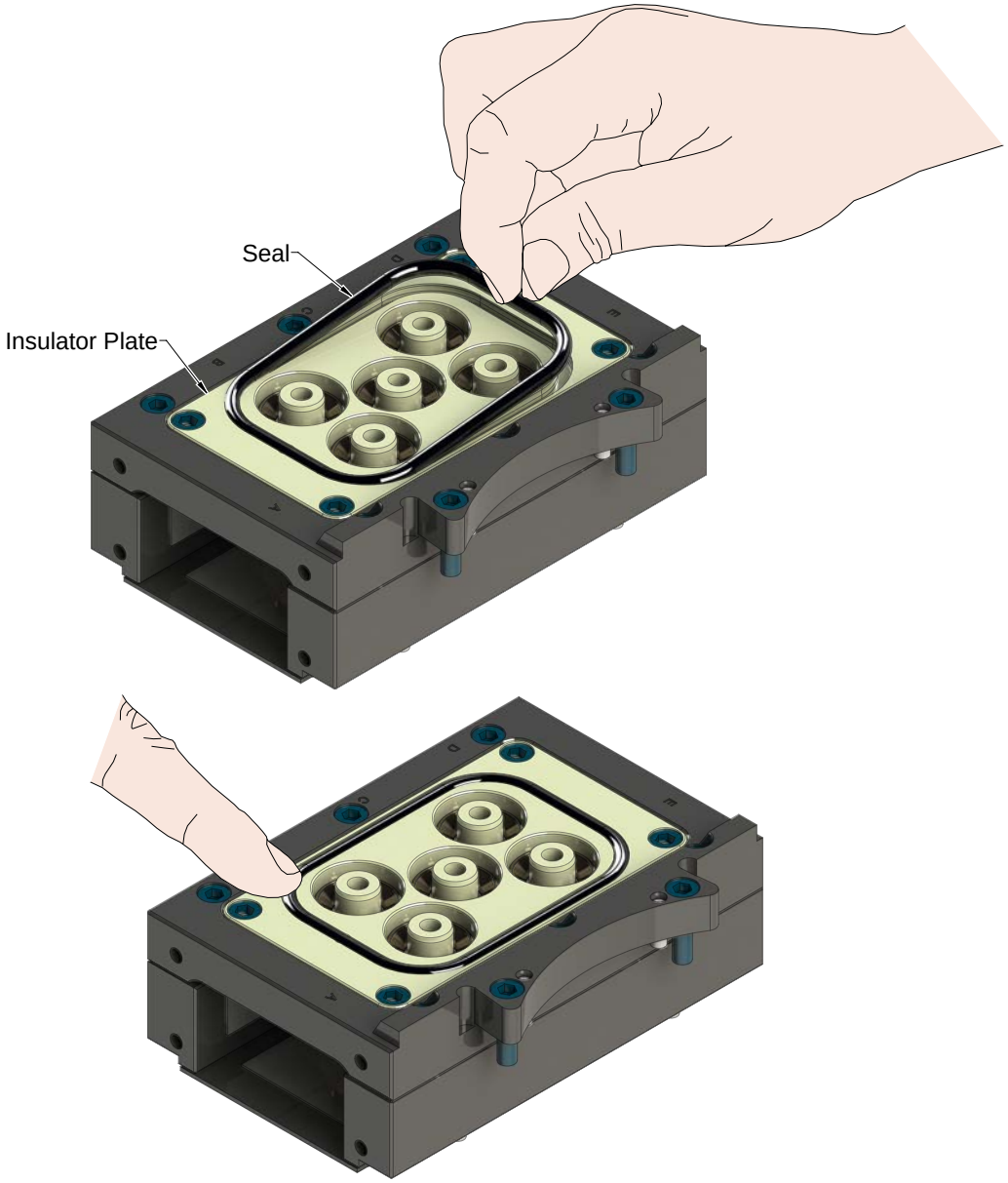

6. Serviceable Parts

Refer to *Section 8—Drawings.*

Table 6.1—Master Module Mounting Fasteners	
Part Number	**Description**
3500-1066020-21A	M6 x 20 Socket Head Cap Screw, SS, ND Microspheres, 0-3 uncoated lead thds. 5-7 coated thds. IFI525

Table 6.2—Tool Module Mounting Fasteners	
Part Number	**Description**
3500-1066016-21A	M6 x 16 Socket Head Cap Screw, DIN 912 A4 S/S (316) ND Ind. Microspheres Epoxy, Yellow. 0-3 uncoated lead thds. 5-7 coated thds.

Table 6.3—Special Tools	
Part Number	**Description**
3690-0000064-60	Brush, Blue Nylon All Purpose (Contact Pin Cleaning)

7. Specifications

Table 7.1—Master module	
9121-PC2-M	Primary Current module with (5) contacts, #2 wire, 200 A rating - Master Side
Interface Connections	(5) Power Contacts
Electrical Rating	Pass through Motor Current: 200 A, 600 V Max. Plated, conical contacts, No-Touch on the Master side.
Cable Sizes Supported	# 4 Thru #2 AWG (Others, Contact ATI) Split-bolt terminals are used to attach the conductor to the contact post.
Weight	3.6 lbs (1.6 kg)

Table 7.2—Tool module	
9121-PC2-T	Primary Current module with (5) contacts, #2 wire, 200 A rating - Tool Side
Interface Connections	(5) Power Contacts
Electrical Rating	Pass through Motor Current: 200 A, 600 V Max. Plated, conical contacts, No-Touch on the Master side.
Cable Sizes Supported	# 4 Thru #2 AWG High-flex type with fine stranding (Others, Contact ATI) Split-bolt terminals are used to attach the conductor to the contact post.
Weight	3.6 lbs (1.6 kg)

Table 7.3—Tool Side cover	
9121-PAD-T	Primary Current Protective Bracket for Tool Side
Weight	TBD lbs (TDB kg)

8. Drawings

Drawings are available on the *ATI website* or by contacting an ATI representative.