Table of Contents

F. High-Current Modules F-2
PG0—High Current Module F-2
1. Product Overview F-2
2. Installation F-3
2.1 Cable Installation F-3
2.2 Cable Removal F-5
2.3 Module Installation and Removal F-6
2.3.1 Module Installation on Tool Changers with a Ledge Mount F-6
2.3.2 Module Removal on Tool Changers with a Ledge Mount F-6
2.3.3 Module Installation on Tool Changers with a Flat Mount F-7
2.3.4 Module Removal on Tool Changers with a Flat Mount F-8
3. Operation F-9
4. Maintenance F-10
5. Troubleshooting and Service Procedures F-11
5.1 Troubleshooting F-11
5.1.1 Troubleshooting Sequence F-12
5.2 Service Procedures F-13
5.2.1 Master Module Contact Tip Replacement F-13
5.2.2 Tool Module Contact Tip Replacement F-14
5.2.3 Master Module Dust V-Ring Seal Replacement F-15
5.2.4 Master Module Contact Base Replacement F-15
5.2.5 Tool Module Contact Base and Wave Spring Replacement F-16
6. Serviceable Parts F-18
7. Specifications F-18
8. Drawings F-19

F. High-Current Modules

PG0—High Current Module

1. Product Overview

High-current modules are designed to carry high-current from a power supply to customer tooling. They consist of plated contacts, which are capable of carrying 600 Amps when coupled. The voltage should not exceed 800 Volts. Power must be off when coupling and uncoupling. In addition, the installation of over-current protection in the primary power supply circuit is recommended. Refer to *Section 8—Drawings* for more information.

DANGER: This module has a voltage of 50V or greater; always remove power before contacting the module. Arcing and damage occur if power is not removed from the module during maintenance or service. Always remove power before attaching or disconnecting cables, separating or inserting the mating couplers, or making any contact with the Tool Changer or Utility Coupler.

CAUTION: Do not couple or uncouple the high-current modules unless electrical power has been disconnected and discharged both upstream and downstream from the modules. Arcing and contact damage will occur. Remove power and discharge both upstream and downstream modules before coupling or uncoupling modules.

The high-current modules use advanced, patented, cone-mating technology to transfer current from the Master to the Tool. The mating conical surfaces provide a large contact area, excellent alignment capability, and enable efficient coupling/uncoupling without high spring forces or excessive wear. If required, the contact tips on either the Master or Tool can be replaced without removing the wiring.

The contact tip on the Master side are recessed below the surface and contain a central insulated post. The modules were designed so that the finger of an average human adult cannot touch the metallic parts. The interior of the module housings are insulated electrically with a thick, hard anodized coating and high-dielectric paper.

The high current Tool module provides compliant motion in the power contacts. ATI requires the use of high-flex type with fine stranding cables and proper strain relief to allow for free axial motion of the Tool module's contact base.

Figure 1.1—PG0 Modules

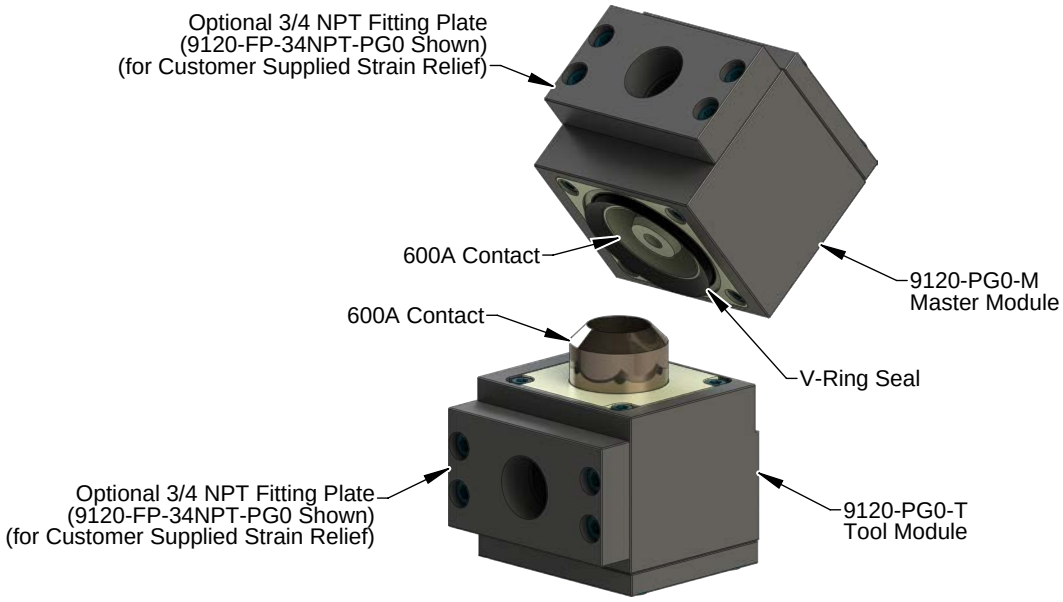

2. Installation

The modules have a high-current electrical contact and can be equipped with an optional 3/4" NPT port fitting plate (9120-FP-34NPT-PG0) in order to support a customer supplied strain relief fitting. Prepared cable ends are fed through the strain relief and into the modules where the conductors are attached to the contact bases. The contact bases can accept up to a #4/0 AWG stranded conductor. For ease of cable installation, it is recommended that the modules be removed from the Tool Changer.

The following steps outline field installation or removal as required. These steps also detail connecting cables to the contacts.

DANGER: This module has a voltage of 50V or greater; always remove power before contacting the module. Arcing and damage occur if power is not removed from the module during maintenance or service. Always remove power before attaching or disconnecting cables, separating or inserting the mating couplers, or making any contact with the Tool Changer or Utility Coupler.

WARNING: Do not perform maintenance or repair(s) on the Tool Changer or modules unless the Tool is safely supported or placed in the tool stand, all energized circuits (for example: electrical, air, water, etc.) are turned off, pressurized connections are purged and power is discharged from circuits in accordance with the customer specific safety practices and policies. Injury or equipment damage can occur with the Tool not placed and energized circuits on. Place the Tool in the tool stand, turn off and discharge all energized circuits, purge all pressurized connections, and verify all circuits are de-energized before performing maintenance or repair(s) on the Tool Changer or modules.

CAUTION: Do not use stiff, heavy stranded cables which can inhibit operation of the high current module. Stiff cables can prevent compliant motion of the contacts and cause an intermittent or improper power connection. Operation of the high current module requires the customer supplied cables to be high-flex type with fine stranding and sufficient strain relief to allow free cable motion.

CAUTION: Thread locker applied to fasteners must not be used more than once. Fasteners might become loose and cause equipment damage. Always apply new thread locker when reusing fasteners.

2.1 Cable Installation

Tools required: *3 mm and 5 mm hex keys, 1 1/8" socket wrench, wire strippers, torque wrench*

1. If already installed on the application, remove the module. Refer to *Section 2.3—Module Installation and Removal*.
2. Remove the (4) M6 socket head cap screws that secure the fitting plate to the housing using a 5 mm hex key.
3. Remove the fitting plate, this will make it easier to install the strain relief. Refer to *Figure 2.1*.
4. Insert the customer supplied strain relief fitting (with lock nut) into the fitting plate and orient the fitting as desired.
5. Use an appropriate tool and tighten the strain relief lock nut to the front face of the adapter plate. Leave the strain relief nut loose.
6. Remove the (4) M5 socket flat head cap screws that secure the housing cover to the housing using a 3 mm hex key.
7. Assemble the fitting plate to the housing, secure with the (4) M6 socket head cap screws using a 5 mm hex key. Tighten to 70 in-lbs (7.9 Nm).

Figure 2.1—Install the Strain Reliefs and Remove the Cover

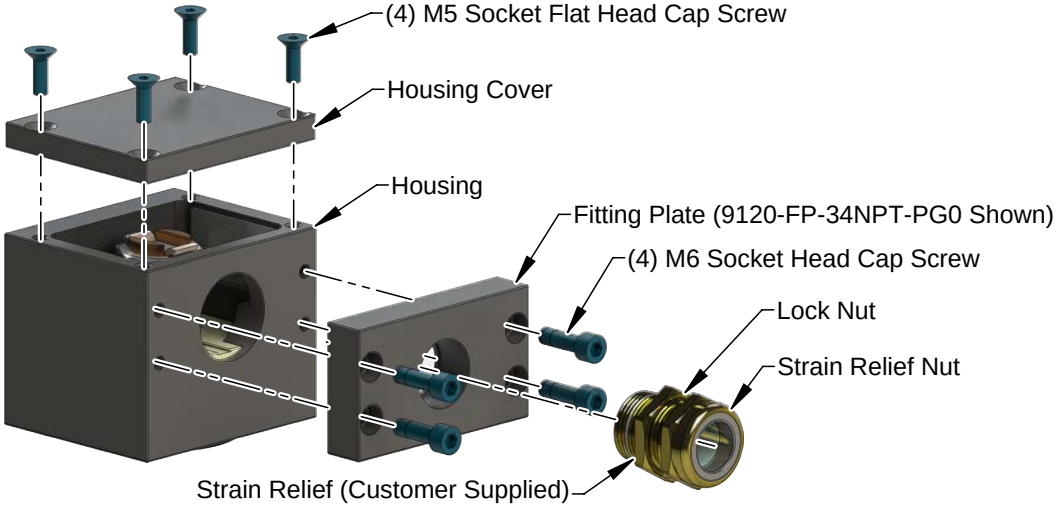

NOTICE: Dimensions given in the cable preparation are suggested lengths only. The customer must determine the proper length for jacket removal and heat shrink tubing based on your specific application.

8. Prepare the cable end by stripping (1-1/8" inches suggested length) of the cable inner and outer jacket. Refer to *Figure 2.2* and *Figure 2.3*.

NOTICE: Ensure individual strands of wire are NOT cut while removing the cable jack.

Figure 2.2—Wire Stripping

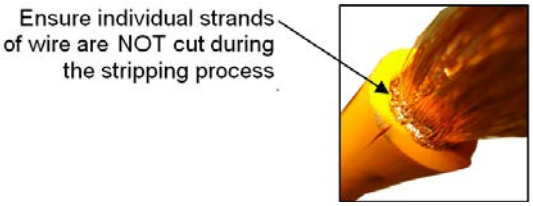

9. Remove the split-bolt cable clamp using a 1 1/8" socket wrench. Refer to *Figure 2.3*.

Figure 2.3—Attach Cable to the PG0 module

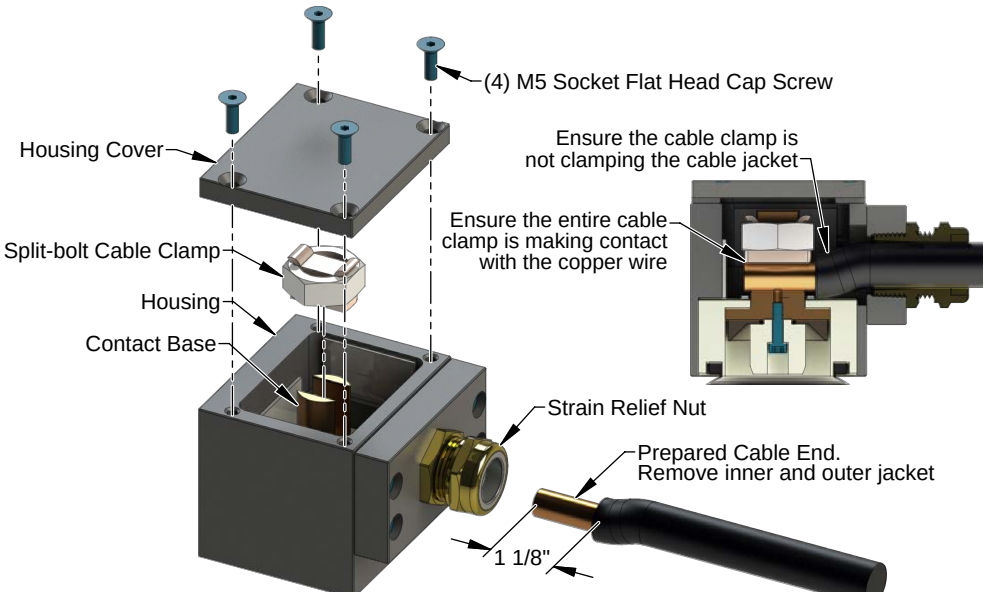

10. Insert the prepared cable end through the customer supplied strain relief fitting and the contact base.
11. Thread the split-bolt cable clamp on the contact base. Tighten securely using a 1 1/8” socket wrench. Torque to 110 in-lbs (12.4 Nm). After you have made sure that no loose wire filaments are protruding.
12. Tighten the strain relief nut.
13. Assemble the housing cover to the housing and secure it with the (4) M5 socket flat head cap screws using a 3 mm hex key. Tighten to 12 in-lbs (1.35 Nm).
14. Install the module to the application. Refer to *Section 2.3—Module Installation and Removal*.

2.2 Cable Removal

Tools required: *13 mm hex key*

1. Remove the module from the application. Refer to *Section 2.3—Module Installation and Removal*.
2. To access the inside of the housings, remove the (4) M5 socket flat head cap screws that secure the housing cover to the housing.
3. Loosen the strain relief nuts.
4. Remove the split-bolt cable clamps holding the cables to the contact base using a 1 1/8” socket wrench.
5. Pull the cable out through the strain relief.
6. To install a new cable, refer to *Section 2.1—Cable Installation* and start with step *8*.

Figure 2.4—Cable Removal

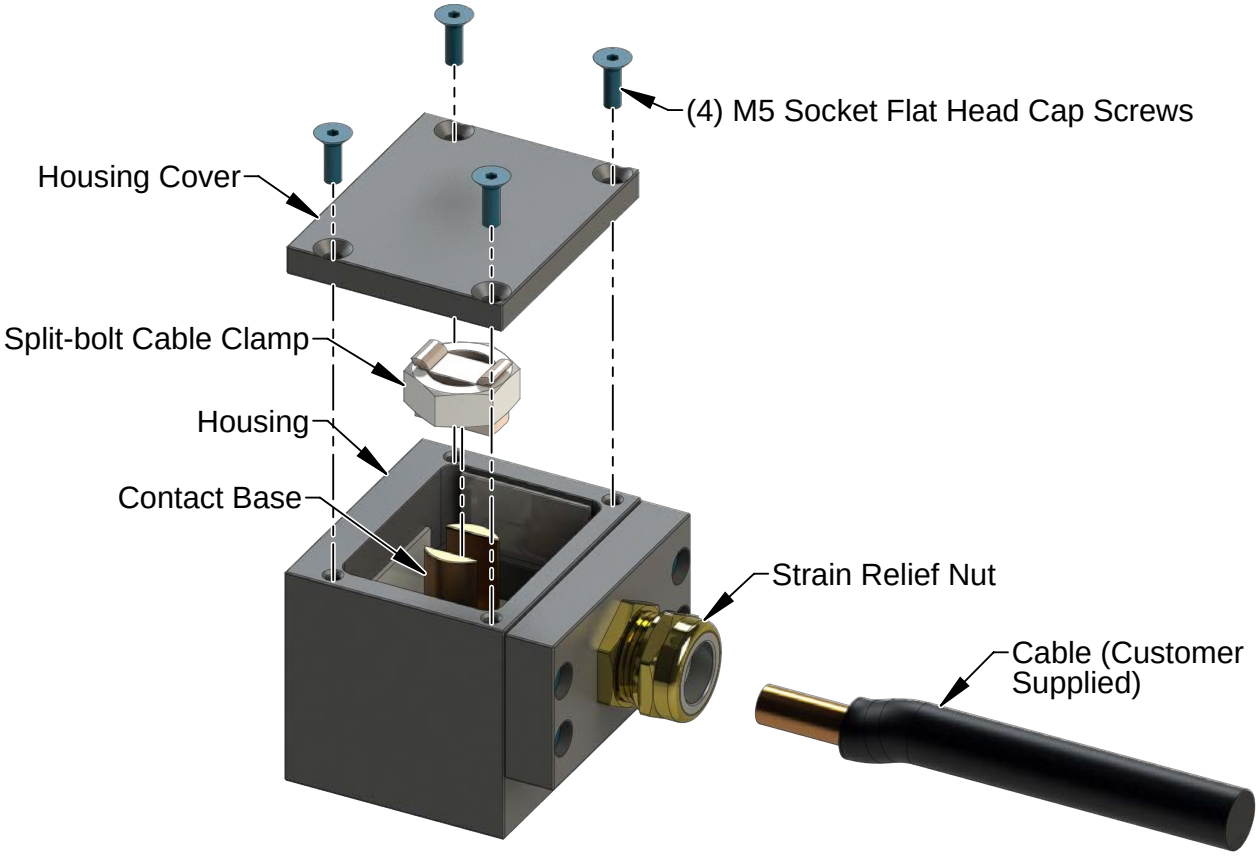

2.3 Module Installation and Removal

The modules require an adapter plate to mount to the Tool Changer. The PG0 module can be ordered with the appropriate adapter plate. Contact an ATI sales representative for compatible Tool Changer models and adapter plates available.

The PG0 modules can be installed on Tool Changes with a ledge mount or flat mounting.

Section 2.3.1—Module Installation on Tool Changers with a Ledge Mount
Section 2.3.2—Module Removal on Tool Changers with a Ledge Mount
Section 2.3.3—Module Installation on Tool Changers with a Flat Mount
Section 2.3.4—Module Removal on Tool Changers with a Flat Mount

2.3.1 Module Installation on Tool Changers with a Ledge Mount

Tools required: *4 mm and 5 mm hex keys, torque wrench*

Supplies required: *Clean rag, Loctite 222 and 242*

1. Clean the mounting surfaces.
2. Align the PG0 module to the ledge mount adapter using the dowel pins.
3. Apply Loctite 222 to the supplied (4) M5 socket head cap screws. Secure the PG0 module to the ledge mount adapter with the (4) M5 socket head cap screws using a 4 mm hex key. Tighten to 55 in-lbs (6.2 Nm)
4. Apply Loctite 242 to the supplied (2) M6 socket head cap screws. Install the ledge mount adapter to the Tool Changer with the (2) M6 socket head cap screws using a 5 mm hex key. Tighten to 70 in-lbs (7.9 Nm).
5. If the installation is complete, the modules may be placed into normal operation.

Figure 2.5—Tool Changers with Ledge Mount Adapter and Module Installation

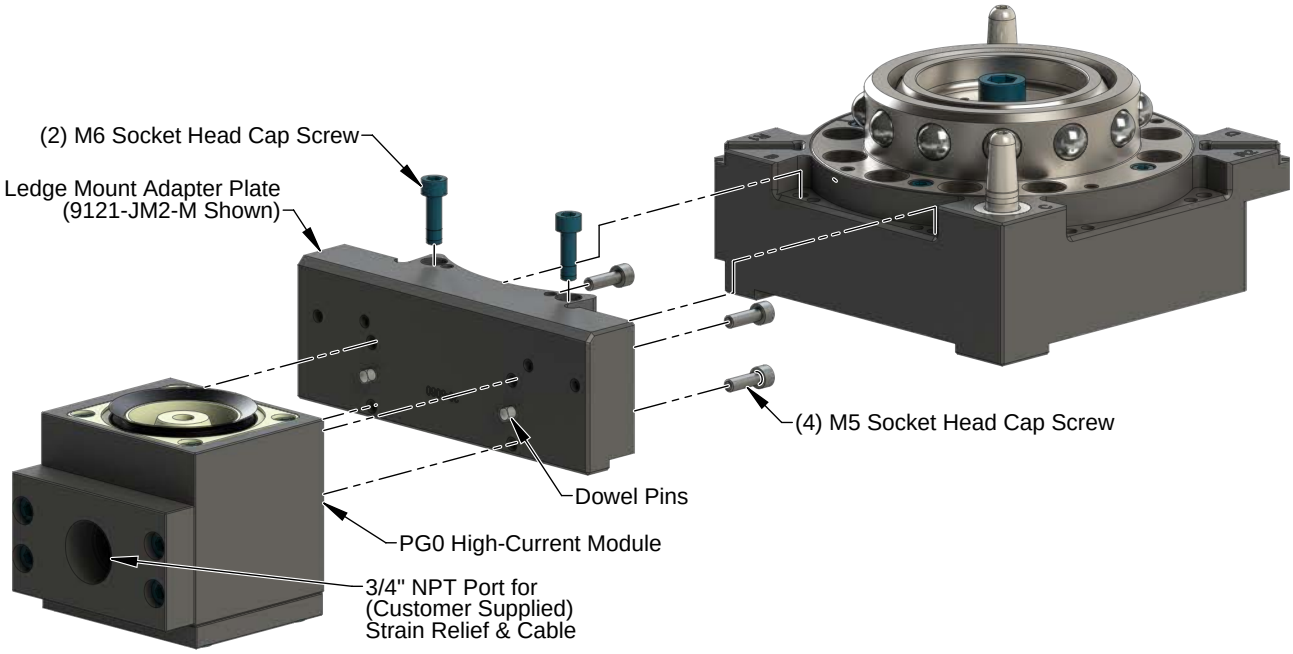

2.3.2 Module Removal on Tool Changers with a Ledge Mount

Tools required: *4 mm and 5 mm hex keys*

1. Place the Tool in a secure location.
2. Uncouple the Master and Tool plates.
3. Turn off and de-energize all energized circuits (e.g. electrical, air, water, etc.).

4. Prior to removing the module, use a marker pen to scribe a line or indication between the Tool Changer or Utility Coupler and module body as a reminder where the module is to be re-installed.
5. Remove the (2) M6 socket head cap screws using a 5 mm hex key and lower the module and ledge mount adapter until it clears the guide pin.
6. Remove the (4) M5 socket head cap screws using a 4 mm hex key and remove the module from the ledge mount adapter.

2.3.3 Module Installation on Tool Changers with a Flat Mount

Tools required: *3 mm hex key, torque wrench*

Supplies required: *Clean rag, Loctite 222*

1. Clean the mounting surfaces.
2. Align adapter plate 2 to the desired Tool Changer flat using the (2) dowel pins.
3. Apply Loctite 222 to the supplied (4) M4 socket head cap screws. Secure adapter plate 2 to the Tool Changer flat with the (4) M4 socket head cap screws using a 3 mm hex key. Tighten to 25 in-lbs (2.8 Nm)
4. Align the PG0 modules to adapter plate 1 using the (2) dowel pins.
5. Apply Loctite 222 to the supplied (4) M5 socket flat head cap screws. Secure the PG0 module to adapter plate 1 with the (4) M5 socket flat head cap screws using a 3 mm hex key. Tighten to 27 in-lbs (3.0 Nm).
6. Align the adapter plate 1 and PG0 module to adapter plate 2 using the (2) dowel pins.
7. Apply Loctite 222 to the supplied (4) M4 socket head cap screws. Secure the adapter plate 1 and PG0 module to adapter plate 2 with the (4) M4 socket head cap screws using a 3 mm hex key. Tighten to 25 in-lbs (2.8 Nm).
8. If the installation is complete, the modules may be placed into normal operation.

Figure 2.6—Flat Adapter and Module Installation

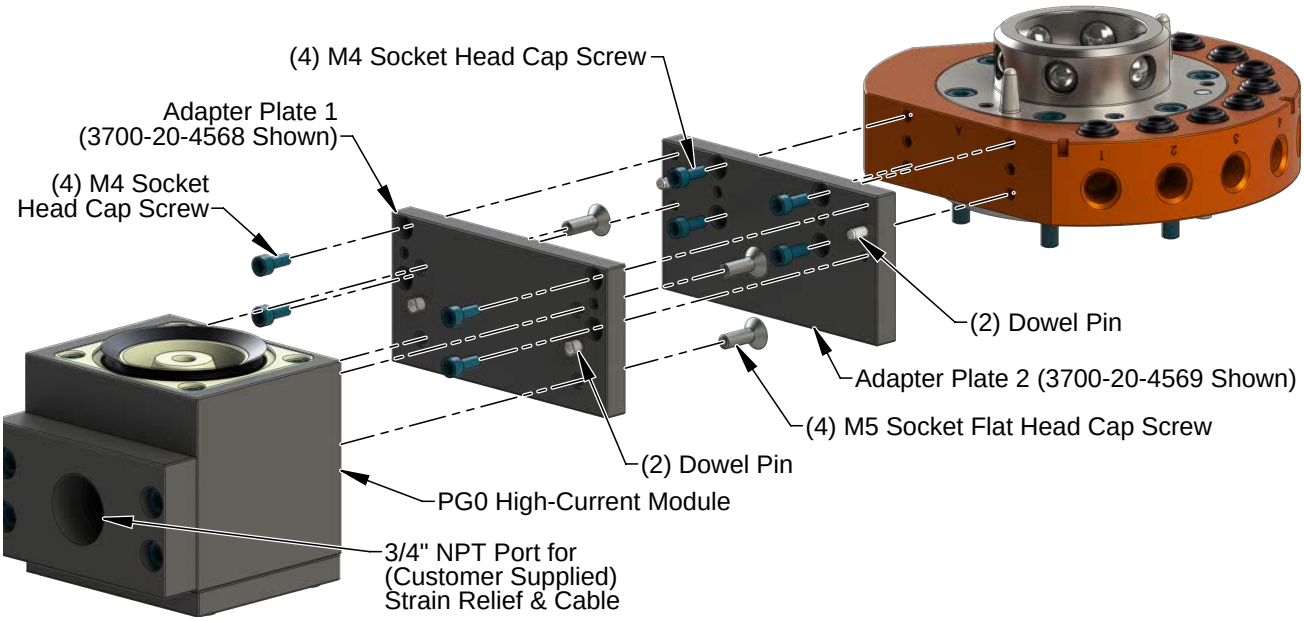

2.3.4 Module Removal on Tool Changers with a Flat Mount

Refer to *Figure 2.6* for removal instruction.

Tools required: *3 mm hex key*

1. Place the Tool in a secure location.
2. Uncouple the Master and Tool plates.
3. Turn off and de-energize all energized circuits (e.g. electrical, air, water, etc.).
4. Prior to removing the module, use a marker pen to scribe a line or indication between the Tool Changer or Utility Coupler and module body as a reminder where the module is to be re-installed.
5. Remove the (4) M4 socket head cap screws that secure adapter plate 1 and the PG0 module to adapter plate 2. Pull adapter plate 1 and the PG0 module straight off adapter plate 2.
6. Remove the (4) M5 socket flat head cap screws that secure the PG0 module to adapter plate 1. Pull the PG0 module straight off adapter plate 1.
7. If needed, remove the (4) M4 socket head cap screws that secure adapter plate 2 to the Tool Changer flat. Pull adapter plate 2 straight off of the Tool Changer flat.

3. Operation

High-current modules are designed to carry large currents to various industrial devices, to provide a separable joint in the power wiring. To maximize the service life of these components, the following points must be observed:

WARNING: The contacts are not a switch. For safety and to prevent equipment damage, disconnect and drain all power before coupling or uncoupling the Tool Changer or Utility Coupler.

CAUTION: Do not couple or uncouple the high-current modules unless electrical power has been disconnected and discharged both upstream and downstream from the modules. Arcing and contact damage will occur. Remove power and discharge both upstream and downstream modules before coupling or uncoupling modules.

CAUTION: Improper cable routing can result in wires and cables being pinched in the joint between the Tool Changer plates and premature failure of the electrical connectors. Properly route and secure all cables, particularly on the Master side.

CAUTION: Always protect the un-used Tool modules when not coupled to a Master module. Dust, debris, and weld spatter can contaminate the contact tips, which can cause arcing and a significant decrease in contact life.

CAUTION: Do not use stiff, heavy stranded cables which can inhibit operation of the high current module. Stiff cables can prevent compliant motion of the contacts and cause an intermittent or improper power connection. Operation of the high current module requires the customer supplied cables to be high-flex type with fine stranding and sufficient strain relief to allow free cable motion.

4. Maintenance

Under normal conditions, no special maintenance is necessary; however, it is recommended that periodic inspections be performed to assure long-lasting performance and verify that unexpected damage has not occurred. Refer to the list below for periodic maintenance items.

DANGER: This module has a voltage of 50V or greater; always remove power before contacting the module. Arcing and damage occur if power is not removed from the module during maintenance or service. Always remove power before attaching or disconnecting cables, separating or inserting the mating couplers, or making any contact with the Tool Changer or Utility Coupler.

WARNING: Do not perform maintenance or repair(s) on the Tool Changer or modules unless the Tool is safely supported or placed in the tool stand, all energized circuits (for example: electrical, air, water, etc.) are turned off, pressurized connections are purged and power is discharged from circuits in accordance with the customer specific safety practices and policies. Injury or equipment damage can occur with the Tool not placed and energized circuits on. Place the Tool in the tool stand, turn off and discharge all energized circuits, purge all pressurized connections, and verify all circuits are de-energized before performing maintenance or repair(s) on the Tool Changer or modules.

If the Tool Changer or Utility Coupler is used in dirty environments (for example: welding or deburring applications), limit the exposure of the Tool Changer or Utility Coupler. Idle Tool assemblies should be covered to prevent debris from settling on the mating surface. Also, the Master assembly should be exposed for only a short period of time during Tool change and down time. Perform the following visual inspection monthly:

- Inspect that mounting fasteners are tight, and if loose, tighten to proper torque. Refer to *Section 2.3—Module Installation and Removal*.
- Inspect the Master and Tool contact tips and springs for any damage or debris. Refer to *Section 5.2.1—Master Module Contact Tip Replacement* and *Section 5.2.2—Tool Module Contact Tip Replacement*.
- Cable connections should be inspected during maintenance periods to ensure they are secure. Loose connections should be cleaned and tightened. Inspect cable sheathing for damage, repair or replace damaged cabling. Loose connections or damaged cabling are not expected and may indicate improper routing and/or strain relieving.
- Inspect V-ring seal for wear, abrasions, and cuts. If worn or damaged, replace. Refer to *Section 5.2.3—Master Module Dust V-Ring Seal Replacement*.

5. Troubleshooting and Service Procedures

The following section provides troubleshooting and service information to help diagnose conditions and repair the high-current module.

DANGER: This module has a voltage of 50V or greater; always remove power before contacting the module. Arcing and damage occur if power is not removed from the module during maintenance or service. Always remove power before attaching or disconnecting cables, separating or inserting the mating couplers, or making any contact with the Tool Changer or Utility Coupler.

WARNING: Do not perform maintenance or repair(s) on the Tool Changer or modules unless the Tool is safely supported or placed in the tool stand, all energized circuits (for example: electrical, air, water, etc.) are turned off, pressurized connections are purged and power is discharged from circuits in accordance with the customer specific safety practices and policies. Injury or equipment damage can occur with the Tool not placed and energized circuits on. Place the Tool in the tool stand, turn off and discharge all energized circuits, purge all pressurized connections, and verify all circuits are de-energized before performing maintenance or repair(s) on the Tool Changer or modules.

5.1 Troubleshooting

High-current modules provide a separable joint in the cabling between power sources and industrial devices. Failure of the industrial devices to operate for any reason must be diagnosed electrically.

Table 5.1—Troubleshooting

Symptom	Possible Cause	Correction
Power intermittently functioning or malfunctioning	Object trapped between modules.	Remove the object, then re-attempt coupling.
	Contact contamination due to environment.	Ensure that the spring loaded contacts on the Tool-side can move freely and are not bound by debris. Clean the spring pins to restore free operation. Clean Tool-side module contacts, refer to *Section 5.2.2—Tool Module Contact Tip Replacement.*
	Contact pin separation.	Any contamination on the contacts should be removed using a stiff nylon brush.
		Air supplied to Tool Changer insufficient, improper valve used. Refer to Tool Changer manual for pneumatic requirements.
	Module contact damage due to coupling/uncoupling under load.	Revise operating procedures to only couple/uncouple with power disconnected and discharged. Replace module contacts, refer to *Section 5.2.1—Master Module Contact Tip Replacement* for the Master module and *Section 5.2.2—Tool Module Contact Tip Replacement* for the Tool module.
	Rigid customer cable connection to module termination.	Change to high-flex, fine strand cables to terminate to high current module. Route and properly restrain cables to allow for 4 mm of motion on the Tool side.
	Cable damage - pinched, torn, or fatigued cables; contact base, or contact spring worn out or damaged.	Inspect cables and contact base for damage, test cables, test contact springs, refer to *Section 5.1.1—Troubleshooting Sequence.*

5.1.1 Troubleshooting Sequence

DANGER: This module has a voltage of 50V or greater; always remove power before contacting the module. Arcing and damage occur if power is not removed from the module during maintenance or service. Always remove power before attaching or disconnecting cables, separating or inserting the mating couplers, or making any contact with the Tool Changer or Utility Coupler.

The following sequence is recommended for troubleshooting primary current problems:

1. First examine all the cables, cable connectors, and power sources for problems and correct as necessary.
2. Use a known good cable to bypass the modules and directly connect the supply to the load.
3. If the load does not operate properly with known good cables, the problem is in the supply or load. Troubleshoot these components using that manufacturer's procedures.
4. If the load operates properly, use the known good cables from the step 2 to connect between the supply and Master module. Use a second set of the known good cables to connect the Tool module to the load.
5. If the load operates properly, the problem is in the old cables, which must be repaired or replaced.
6. If the load does not operate properly, the problem is in the high-current modules.
7. Externally, examine the modules for loose, missing, or damaged contacts replacing and tightening as necessary.
8. Remove the covers from the modules and insure that the cables have not come loose from the contact bases. Re-secure the cables as necessary. Refer to the cable installation section.
9. Use a hardwood dowel or other non-metallic, soft rod to push axially on the tool side contacts to verify free axial motion. If the springs under these contacts do not allow axial motion of the contacts, replace the springs accordingly as outlined above in the maintenance section.

If the above steps fail to restore proper operation contact ATI for service.

5.2 Service Procedures

The following service procedures provide instructions for component replacement.

5.2.1 Master Module Contact Tip Replacement

Refer to *Figure 5.1* for the following instructions, which shows a module similar to PG0.

Parts required: *Refer to Section 8—Drawings*

Tools required: *2.5 mm or 3 mm hex key, torque wrench*

Supplies required: *Non-hardening, conductive silver bearing grease (ATI #0290-70-0000-50-008, McMaster-Carr #1219K57, AI Technology #ELGR8501 or equivalent)*

Removal:

1. Place the Tool in a secure location.
2. Uncouple the Master and Tool plates.
3. Turn off and de-energize all energized circuits (for example: electrical, pneumatic, and hydraulic circuits).
4. Remove the M3 or M4 socket head cap screw from the center of the insulator post using a 2.5 mm or 3 mm hex key.
5. Remove the insulator post and the Master contact tip. Discard the contact tip.

Figure 5.1—Master Module Contact Tip Replacement

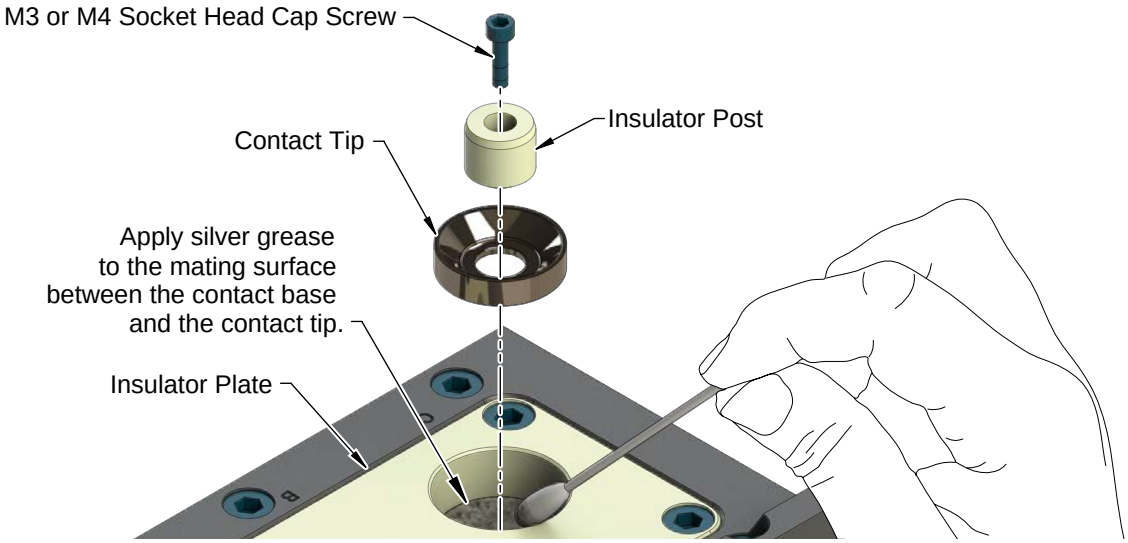

Installation:

> **NOTICE:** Always replace Master and Tool contact tips at the same time (as pairs). Failure to change both halves of a mating pair will result in decreased life of the new component.

6. Apply a liberal amount of non-hardening, conductive silver bearing grease (ATI #0290-70-0000-50-008, McMaster-Carr #1219K57, AI Technology #ELGR8501 or equivalent) with a volume resistivity of 0.001 ohm-cm minimum to the mating surface between the contact base and the new contact tip. Insert the new contact tip into the insulator plate and reinstall the center insulator post.
7. For a M3 socket head cap screw, insert the screw into the insulator post and secure using a 2.5 mm hex key. Tighten to 10 in-lbs (1.1 Nm). For a M4 socket head cap screw, insert the screw into the insulator post and secure using a 3 mm hex key. Tighten to 12 in-lbs (1.36 Nm).
8. Safely resume normal operation.

5.2.2 Tool Module Contact Tip Replacement

Refer to *Figure 5.2* for the following instructions, which shows a module similar to PG0.

Parts required: *Refer to Section 8—Drawings*

Tools required: *2.5 mm or 3 mm hex key, torque wrench*

Supplies required: *Non-hardening, conductive silver bearing grease (ATI 0290-70-0000-50-008, McMaster-Carr #1219K57, AI Technology #ELGR8501 or equivalent)*

Removal:

1. Place the Tool in a secure location.
2. Uncouple the Master and Tool plates.
3. Turn off and de-energize all energized circuits (for example: electrical, pneumatic, and hydraulic circuits).
4. Remove the or M4 socket head cap screw from the center of the Tool contact tip using a 2.5 mm or 3 mm hex key.
5. Remove the Tool contact tip from the contact carrier and discard.

Figure 5.2—Tool Module Contact Tip Replacement

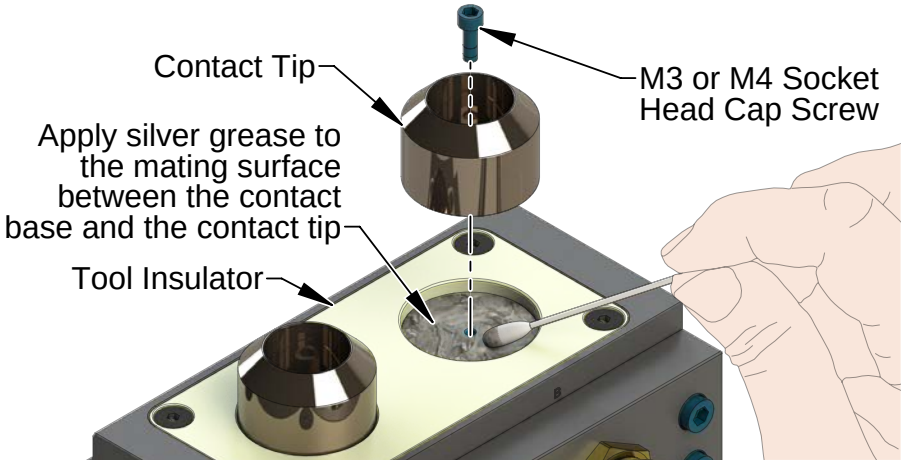

Installation:

> **NOTICE:** Always replace Master and Tool contact tips at the same time (as pairs). Failure to change both halves of a mating pair will result in decreased life of the new component.

6. Apply a liberal amount of non-hardening, conductive silver bearing grease (ATI 0290-70-0000-50-008, McMaster-Carr #1219K57, AI Technology #ELGR8501 or equivalent) with a volume resistivity of 0.001 ohm-cm minimum to the mating surface between the contact base and the new contact tip.
7. Insert the new contact tip into the contact carrier.
8. For a M3 socket head cap screw, insert the screw into the Tool contact tip and secure using a 2.5 mm hex key. Tighten to 10 in-lbs (1.1 Nm). For a M4 socket head cap screw, insert the screw into the Tool contact tip and secure using a 3 mm hex key. Tighten to 12 in-lbs (1.36 Nm).
9. Safely resume normal operation.

5.2.3 Master Module Dust V-Ring Seal Replacement

Parts required: *Refer to Section 8—Drawings*

Tools required: *Small screw driver*

The seal protects the electrical connection between the Master and Tool module. If the seal becomes worn or damaged, replace it.

1. Place the Tool in a secure location.
2. Uncouple the Master and Tool plates.
3. Turn off and de-energize all energized circuits (e.g. electrical, air, water, etc.).
4. To replace the V-Ring dust seal, use a small screwdriver or similar to gently pry the seal out of the retention groove.
5. To install a new seal, place it over the empty groove in the master side insulator plate and press the seal in place.
6. Safely resume normal operation.

Figure 5.3—V-ring Seal Replacement

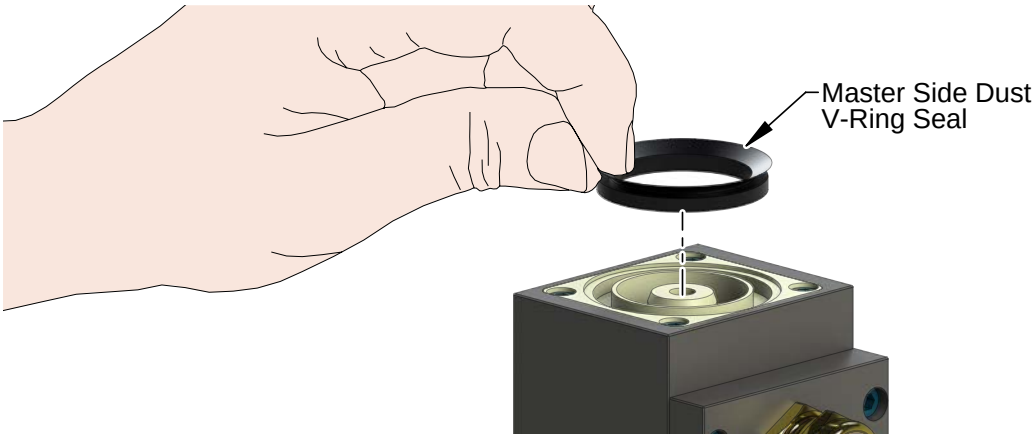

5.2.4 Master Module Contact Base Replacement

Parts required: *Refer to Section 8—Drawings.*

Tools required: *4 mm hex key, 13 mm wrench, torque wrench, snap ring pliers*

Supplies required: *Loctite 222*

1. Place the Tool in a secure location.
2. Uncouple the Master and Tool plates.
3. Turn off and de-energize all energized circuits (e.g. electrical, air, water, etc.).
4. Remove the module from the Tool Changer or Utility Coupler. Refer to *Section 2.3.2—Module Removal on Tool Changers with a Ledge Mount* or *Section 2.3.4—Module Removal on Tool Changers with a Flat Mount*.
5. Remove the cable, refer to *Section 2.2—Cable Removal*.
6. Remove the contact tip components. Refer to *Section 5.2.1—Master Module Contact Tip Replacement* removal section.
7. Remove the (4) M5 socket head cap screws that secure the (fiberglass) master insulator from the master housing using a 4 mm hex key. Refer to *Figure 5.4*.
8. Using snap ring pliers, remove the retaining ring from the back side of the master contact base and set aside.
9. Remove the contact base from the master housing and discard.

Figure 5.4—Replacing the Master Contact Base

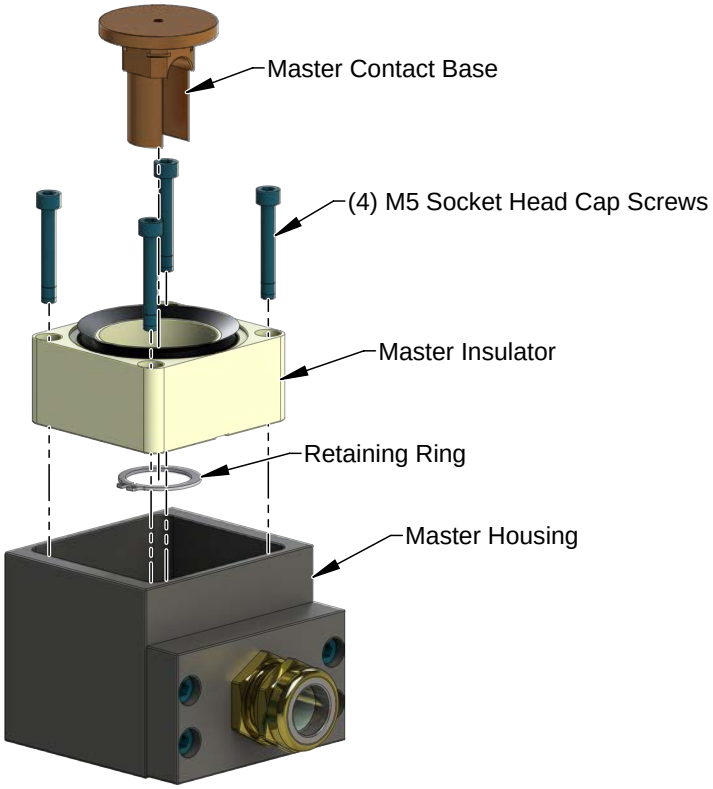

10. Insert new contact base into the master insulator and secure with retaining ring using snap ring pliers.
11. Apply Loctite 222 to the (4) M5 socket head cap screws.
12. Assemble the master insulator to the master housing, secure using the (4) M5 socket head cap screws using a 4 mm hex key. Tighten to 24 in-lbs (2.7 Nm)
13. Install the contact tip components. Refer to *Section 5.2.1—Master Module Contact Tip Replacement* installation section.
14. Install the cable, refer to *Section 2.1—Cable Installation*.
15. Install the module onto the Tool Changer or Utility Coupler. Refer to *Section 2.3.1—Module Installation on Tool Changers with a Ledge Mount* or *Section 2.3.3—Module Installation on Tool Changers with a Flat Mount*.
16. Safely resume normal operation.

5.2.5 Tool Module Contact Base and Wave Spring Replacement

Parts required: *Refer to Section 8—Drawings.*

Tools required: *4 mm hex key, 13 mm wrench, torque wrench, snap ring pliers*

Supplies required: *Loctite 222*

1. Place the Tool in a secure location.
2. Uncouple the Master and Tool plates.
3. Turn off and de-energize all energized circuits (e.g. electrical, air, water, etc.).
4. Remove the module from the Tool Changer or Utility Coupler. Refer to *Section 2.3.2—Module Removal on Tool Changers with a Ledge Mount* or *Section 2.3.4—Module Removal on Tool Changers with a Flat Mount*.
5. Remove the cable, refer to *Section 2.2—Cable Removal*.

6. Remove the contact tip components. Refer to *Section 5.2.2—Tool Module Contact Tip Replacement* removal section.
7. Remove the (4) M5 socket head cap screws that secure the (fiberglass) tool insulator from the tool housing using a 4 mm hex key. Refer to *Figure 5.5*.
8. Using snap ring pliers, remove the retaining ring from the back side of the tool contact base and set aside.
9. Remove the contact base and wave spring from the tool housing.

Figure 5.5—Replacing the Tool Contact Base and Wave Spring

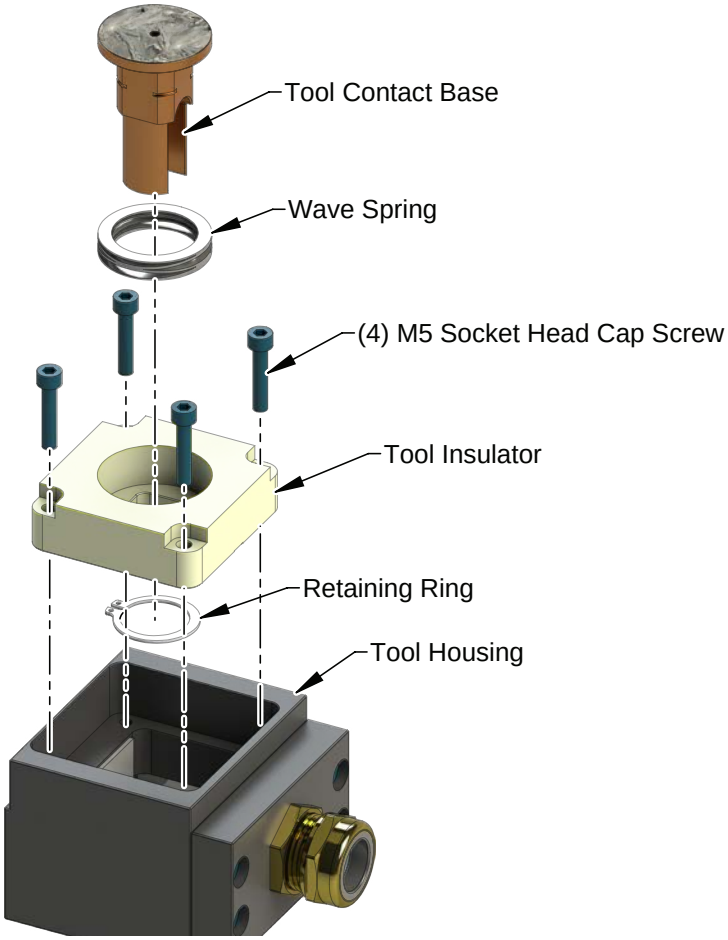

10. Insert the new wave spring on the tool contact base.
11. Insert the new contact base and wave spring into the tool insulator and secure with the retaining ring using snap ring pliers.
12. Apply Loctite 222 to the (4) M5 socket head cap screws.
13. Assemble the tool insulator to the tool housing, secure using the (4) M5 socket head cap screws using a 4 mm hex key. Tighten to 26 in-lbs (2.9 Nm).
14. Install the contact tip components. Refer to *Section 5.2.2—Tool Module Contact Tip Replacement* installation section.
15. Install the cable, refer to *Section 2.1—Cable Installation*.
16. Install the module onto the Tool Changer or Utility Coupler. Refer to *Section 2.3.1—Module Installation on Tool Changers with a Ledge Mount* or *Section 2.3.3—Module Installation on Tool Changers with a Flat Mount*.
17. Safely resume normal operation.

6. Serviceable Parts

Refer to *Section 8—Drawings*.

7. Specifications

Table 7.1—Master Module	
9121-PG0-M	High Current Module
Interface Connections	(1) Power Contact
Electrical Rating	600 A, 800 V Max.
Cable Sizes Supported	#1/0 through #4/0 AWG (Others, Contact ATI) Split-bolt terminals are used to attach the conductor to the contact post.
Weight	TBD lb (TBD kg)

Table 7.2—Tool Module	
9121-PG0-T	High Current Module
Interface Connections	(1) Power Contact
Electrical Rating	600 A, 800 V Max.
Cable Sizes Supported	#1/0 through #4/0 AWG High-flex type with fine stranding (Others, Contact ATI) Split-bolt terminals are used to attach the conductor to the contact post.
Weight	TBD lbs (TBD kg)

8. Drawings

Drawings are available on the *ATI website* or by contacting an ATI representative.