Table of Contents

Glossary of Terms **C-3**

C. Control and Signal Modules **C-4**

DB12-M and DB13-T—DeviceNet Control/Signal Modules **C-4**

1. Product Overview **C-4**

1.1 DB12 Master **C-4**

1.2 DB13 Tool **C-5**

2. Product Information **C-6**

2.1 Master Module Information **C-6**

2.1.1 Setting the DIP Switches on the Master module C-6

2.1.2 MAC ID C-6

2.1.3 Baud Rate C-6

2.1.4 Termination Resistor C-6

2.1.5 Module Status LED C-7

2.1.6 Network Status LED C-8

2.1.7 Using Quick-Connect C-8

2.2 Arc Prevention Circuit **C-9**

2.2.1 Arc Prevention Circuit Behavior during Coupling C-9

2.2.2 Arc Prevention Circuit Behavior during Uncoupling C-10

2.3 Tool Module **C-10**

2.3.1 Tool-ID C-10

2.3.2 Setting the DIP Tool-ID Switches C-11

2.3.3 Module Status LED C-11

2.3.4 Network Status LED C-11

2.3.5 MAC ID C-11

2.3.6 Baud Rate C-11

2.3.7 Termination Resistor C-11

2.4 Tool Side TSI **C-13**

2.4.1 Tool Stand Interlock Safety Feature: C-13

2.4.2 DB12 Latch Enable Logic C-13

2.4.3 TSI Overview C-14

2.5 Software **C-15**

3. Installation **C-17**

3.1 Master Module Installation **C-17**

3.2 Master Module Removal **C-18**

3.3 Tool Module Installation **C-19**

3.4 Tool Module Removal **C-19**

3.5 DeviceNet Configuration C-20
3.6 Utility Schematic C-20
3.7 Setting the Tool-ID and DIP Switches C-20
4. Operation C-21
4.1 Lock, Unlock, and RTL Sensor Cable LED Behavior C-21
4.2 Recommended Sequence of Operation C-22
5. Maintenance C-24
5.1 Pin Block Inspection and Cleaning C-25
6. Troubleshooting and Service Procedures C-26
6.1 Troubleshooting C-26
6.1.1 Solenoid Valve Manual Override Procedure C-28
6.2 Service Procedures C-29
6.2.1 Seal Replacement C-29
7. Serviceable Parts C-30
8. Specifications C-30
9. Drawings C-32

Glossary of Terms

Term	Definition
Auxiliary Power Available	An input indicating the presence of Auxiliary Power Supply to the ATI Master module.
EOAT	End-Of-Arm-Tool (end effector).
Latch	The output supplied to the ATI Master DeviceNet node to couple the Tool Changer (only valid for double solenoid valve equipped units).
Lock	A proximity sensor input indicating that the coupling mechanism is in the Lock position.
RTL	A proximity sensor input that senses when the ATI Tool is close.
Solenoid Energized	An input indicating current draw from the valve and the solenoid coil.
TSI	The Tool Stand Interlock feature is a custom ATI safety solution and circuit designed to only allow Tool Changer release while in the stand or storage location.
TSI Relay	A relay circuit present on the ATI Tool module that is triggered by a tool stand limit switch in order to close the TSI circuit and allow Tool Changer release.
TSIV	A control reliable input supported for monitoring of a tool stand limit switch used with the TSI circuit.
TSRV	A control reliable input provided for health status monitoring of the TSI Relay.
Unlatch	The output supplied to the ATI Master DeviceNet node to uncouple the Tool Changer.
Unlock	A proximity sensor input indicating that the coupling mechanism is in the Unlock position.

C. Control and Signal Modules

DB12-M and DB13-T—DeviceNet Control/Signal Modules

1. Product Overview

The DeviceNet modules are required to provide a means for the customer to communicate with and control the Tool Changer. *Section 2.1—Master Module Information* details DeviceNet programming information and operational capability.

An electrical interface is provided on the Master module for support of a double-solenoid integrated valve (single-solenoid valve is not supported). A double solenoid valve is provided with the master valve adapter for Lock/Unlock control of the Tool Changer. The user is only required to provide a pneumatic supply source to the Tool Changer.

Power and signal connectors are provided for interfacing on the Master and Tool modules. When the Tool Changer is coupled, the Master and Tool modules pass signals using a spring-loaded pin block. A flexible boot surrounds the pin block to seal the connection from moisture and liquid while coupled.

The DeviceNet modules are designed with special features to afford the user the opportunity to operate the tool changer in the safest manner possible. In addition to providing the standard Lock, Unlock, and Ready-to-Lock sensor inputs, the modules are outfitted with Tool Stand Interlock (TSI). The TSI feature consists primarily of a physical break in the unlatch solenoid valve circuit. The TSI circuit is designed to allow tool changer release **only** when the tool is in the stand or storage location. Refer to *Section 2.4—Tool Side TSI* for more information regarding TSI.

The Tool module employs a series of thumbwheel switches for setting of the Tool-ID input. This allows the customer to distinguish between the different Tools that are being used in a robotic cell or on a production line. See *Section 2.5—Software* for DeviceNet bitmap and I/O information.

The DeviceNet Modules also incorporate ATI's exclusive Arc Prevention Circuit which extends the life of all electrical power contacts by eliminating arcing caused by inductive loads and high inrush current during coupling/uncoupling. Refer to *Section 2.2—Arc Prevention Circuit* for additional information.

1.1 DB12 Master

The Master module is equipped with a 4-pin, male Auxiliary Power connector and a 5-pin, male DeviceNet connector for supplying signals and power to the end-of-arm tooling and interfacing with the Tool Changer's Lock, Unlock, and Ready-to-Lock sensors. Electrical schematics and connector details are provided in *Section 9—Drawings*.

Interface to the Tool Changers integrated RTL, Lock, and Unlock sensors are provided through (4) M8, 3-pin connectors on the Master module. Refer to the specific Tool Changer manual for details on the operation of RTL, Lock, and Unlock sensors. The Lock, Unlock, and RTL cables are provided as an integrated part of the Tool Changer.

An electrical interface is provided on the Master module for support of only integrated double solenoid valves (DC Voltage, sourcing-type). The integrated valve can be supplied from ATI as part of the valve adapter block (such as 9121-JU2-M). Refer to the valve adapter manual for more information (9620-20-C-Jxx Valve Adapters with a Double Solenoid and Valve Pass Through). Electrical interface drawings and connector details are provided in drawings in *Section 9—Drawings.* When the Tool Changer is coupled, the Master and Tool modules interface using a spring-loaded pin blocks. A V-ring seal surrounds the pin block and is designed to be water resistant—but not waterproof—when modules are coupled.

The Master module provides DIP switches for setting Mac ID and Baud Rate. Refer to *Section 2.1.1—Setting the DIP Switches on the Master module.*

Figure 1.1—DB12-M DB13-T Modules

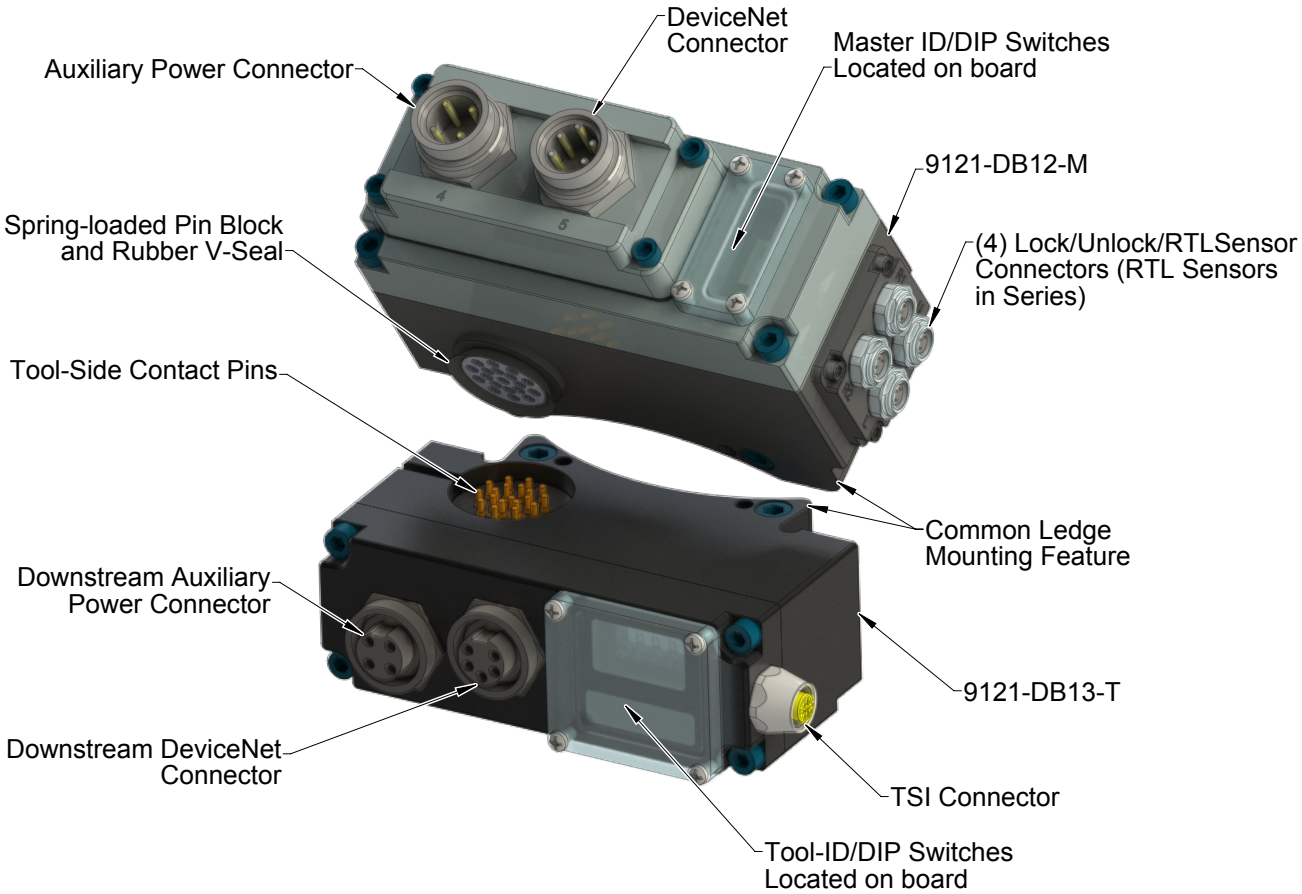

1.2 DB13 Tool

The DB13 Tool module is equipped with a 4-pin, female Auxiliary Power connector and a 5-pin, female DeviceNet connector and provides the interface for supplying pass through signals and power to the end-of-arm tooling. Refer to *Section 1—Product Overview* for additional information and connector details. The (5) digit Tool-ID feature distinguishes between the different tools coupled by the Tool Changer.

The Tool module provides DIP switches for setting Mac ID and Baud Rate. Refer to *Section 3—Re-install the window and tighten the M3 Pan Head Captive Screws.*

2. Product Information

The modules enable the customer to control and communicate with the Tool Changer through a network using standard DeviceNet protocol (www.odva.org). DeviceNet nodes are established on the Master and the Tool module. Control of the Tool Changer is realized through the Master Node along with the reporting of various Tool Changer I/O. The Tool module supports Tool-ID reported through the Master and functions as a pass through for DeviceNet, auxiliary power, and signals to downstream equipment.

The modules employ a M23 17-pin for DeviceNet, auxiliary power, and signals. Please refer to *Section 9—Drawings* for specific module wiring and connector interface information.

Prior to using the Tool Changer and the DeviceNet modules, various hardware settings must be configured. Communicating with the DeviceNet modules requires knowledge of DeviceNet standards and operation.

2.1 Master Module Information

The Master Node operates as a Group 2-Only Server on the DeviceNet network. The Master Node supports Explicit Messages, Polled, Strobe and Change of State/Cyclic of the predefined Master/Slave Connection set. The Master Node supports Quick Connect operation as defined by ODVA (refer to the EDS file for specific information). The Master Node does not support the Unconnected Message Manager (UCMM). MAC ID, Baud Rate and Termination Resistor settings for the Master Node are configured through a DIP switch. (2) LED's provide network and module status.

2.1.1 Setting the DIP Switches on the Master module

1. Loosen the four M3 Pan head Captive Screws and remove the window.
2. Set the DIP switches as needed, refer to Figure 3.2 for details.
3. Re-install the window and tighten the M3 Pan Head Captive Screws.

Figure 2.1—DeviceNet Master Module LEDs and DIP Switch Settings

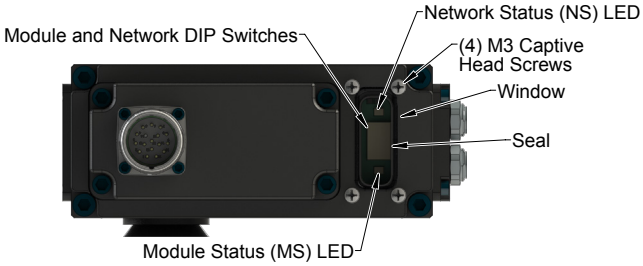

2.1.2 MAC ID

The MAC ID is set by either hardware or software configuration. The range is 0-63. In order for the MAC ID to be set by software, all DIP switch positions must be on. If the MAC ID is set by software, the Baud Rate must also be set by software. Refer to *Figure 2.2* for detailed information on DIP switch setup.

2.1.3 Baud Rate

Baud Rate is set by either fasteners or software configuration. The possible settings are 125, 250 or 500 Kbps. In order for the Baud Rate to be set by software, DIP switch positions 7 and 8 must be on. See *Figure 2.2* for DIP switch setup.

2.1.4 Termination Resistor

When DIP switch position 9 is on, a 120Ω resistor is placed across the CAN High and Low lines and termination to the CAN network is provided. If switch 9 is off, termination must be supplied by another device or through a termination cap at the end of the network cable.

Figure 2.2—DeviceNet Master Module DIP Switch Settings

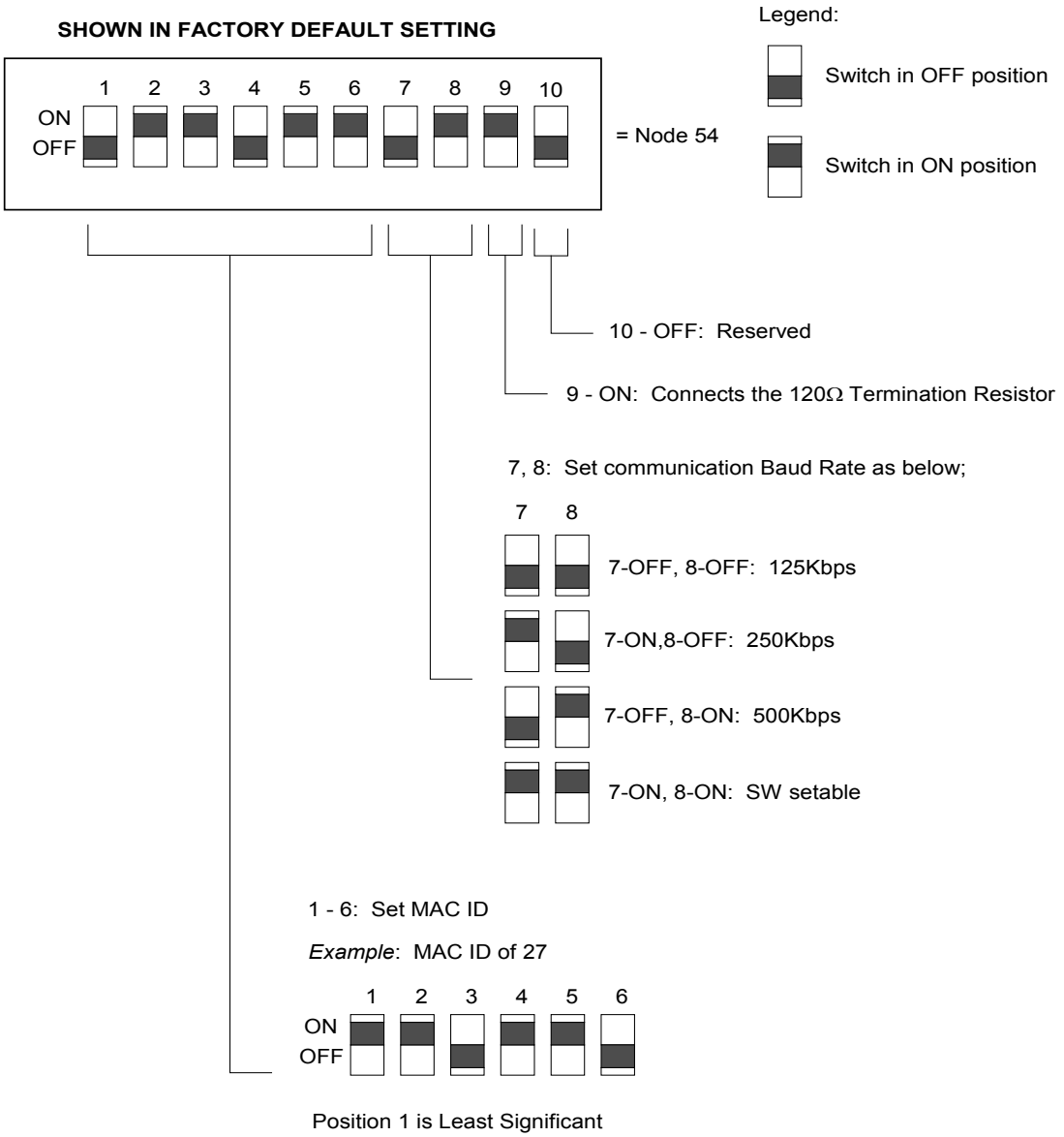

2.1.5 Module Status LED

The module status LED is identified on the device board as "MS". It provides device status for power and proper operation. *Table 2.1* outlines this LED's functions:

Table 2.1—Module Status LED

Status	LED Function	Note
No Power	Off	No power applied. Check voltage is 24 VDC.
Operational	Green	Normal operation.
Standby	Flashing Green	Device needs commissioning/standby state. Configuration missing, incomplete or incorrect.
Recoverable Fault	Flashing Red	Recoverable fault.
Unrecoverable Fault	Red	Unrecoverable fault.
Self Tests	Flashing Green/ Red	Device is performing self tests.

2.1.6 Network Status LED

The network status LED is identified on the device board as "NS". It provides network status for power and communication. *Table 2.2* outlines the Network Status LED's functions:

Table 2.2—Network Status LED

Status	LED Function	Note
No Power/ Off Line/No IP Address	Off	Device not on line. Check Baud Rate. Device has not completed the duplicate MAC ID test. Module Status is On. Check for termination resistor. Device not powered. See Module Status.
On Line, Not Connected.	Flashing Green	Device is on line but connection is not established. Device not allocated to a Master.
OK On line, Connected	Green	Device is on line with connections established. Device is allocated to a Master.
Connection Timeout	Flashing Red	One or more I/Os are timed out.
Critical Link Failure	Red	Failed communication. Error detected and incapable of communication. Duplicate MAC ID or Bus off.
Communication Faulted and Received and Identify Communication Fault Request – Long Protocol Message	Flashing Green-Red	A specific Communication Faulted Device. Device has received and accepted an Identify Communication Faulted Request – Long Protocol message.

2.1.7 Using Quick-Connect

The Quick-Connect feature can be enabled in the ATI Tool module. With the Quick-Connect feature enabled, the ATI Tool Changer module can reconnect to the DeviceNet network within 1 second once power is applied to the pin block during tool change.

Tool modules with Quick Connect enabled will not check for duplicate MAC addresses. If the DeviceNet network includes duplicate MAC addresses, this will cause communication faults. See *Section 2.3—Tool Module* for fault causes and correction.

In order to disable the Quick Connect feature in the tool module, you must disable the feature during commissioning and module replacement. Contact ATI if you need additional help disabling this attribute.

2.2 Arc Prevention Circuit

The DB12-M module incorporates ATI's exclusive Arc Prevention Circuit. The Arc Prevention Circuit extends the life of all electrical power contacts by eliminating arcing caused by inductive loads and high inrush current during coupling/uncoupling. The Arc Prevention Circuit makes it possible to couple/uncouple without switching power off and prevents damage to the contacts.

In the DB12-M module, the Arc Prevention Circuit controls the ON/OFF status of the following three power signals:

4. Device Net Power (CAN V+)
5. Switched Auxiliary 1 Power V+
6. Unswitched Auxiliary 2 Power V+

The behavior of the Arc circuit is more fully described in the following sections.

2.2.1 Arc Prevention Circuit Behavior during Coupling

The behavior of the Arc Prevention circuit during coupling can be more clearly understood by referring to *Figure 2.3*, which shows the power-on timing diagram for the Arc Prevention Circuit. Starting at the top of the diagram, the LATCH command is issued thus initiating locking of the Master and Tool.

Soon after locking is initiated, electrical contact between Master and Tool pin contacts occurs (this time is designated t_1 in the diagram). The magnitude of time t_1 is a function of many factors—including the weight of the EOAT, the distance between the Master and Tool when the LATCH command is issued, how well the Master and Tool are aligned during pick-up, etc.

As soon as electrical contact is made and the LATCH command is issued, the Arc Prevention Circuit will turn on DeviceNet, Auxiliary 1, and Auxiliary 2 power. The time delay between the electrical contacts becoming fully engaged and when power is actually available to the EOAT (time t_2 in the diagram) is less than 100ms.

NOTICE: The Arc Prevention Circuit will only allow power to pass to the Tool after the LATCH command has been issued and the Master and Tool electrical contacts are fully engaged. Loss of the LATCH command after it has been issued does not turn off power to the Tool. It is recommended that the LATCH output command remain true until the LOCKED input goes true and remains true. Only after the coupling operation is complete, should the LATCH command be made false. Refer to the Recommended Sequence of Operation in Appendix A for additional details.

Figure 2.3—Power-On Timing

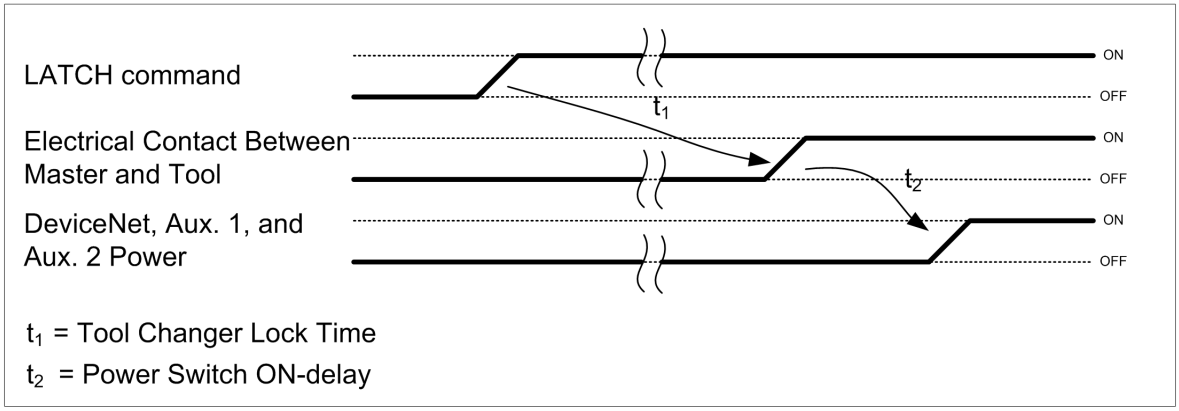

2.2.2 Arc Prevention Circuit Behavior during Uncoupling

The behavior of the Arc Prevention Circuit during uncoupling can be more clearly understood by referring to *Figure 2.4*, which shows the power-off timing diagram for the Arc Prevention Circuit. Starting at the top of the diagram, the UNLATCH command is issued thus initiating uncoupling of the Master and Tool.

Immediately after the UNLATCH command is issued, the Arc Prevention Circuit will turn off DeviceNet, Auxiliary 1, and Auxiliary 2 power. The power-off time delay between the UNLATCH command and the switching off of power (designated t3 in the diagram) is less than 50ms.

Sometime after power is turned off and the Master and Tool begin to separate, electrical contact between Master and Tool Pin Contacts will be lost. This occurs with a delay, designated t4 in the diagram, after the UNLATCH command is issued. The magnitude of time t4 is a function of many factors, including the weight of the EOAT, the friction between Master and Tool alignment pins, etc. but is usually not shorter than 100ms.

Figure 2.4—Power-Off Timing

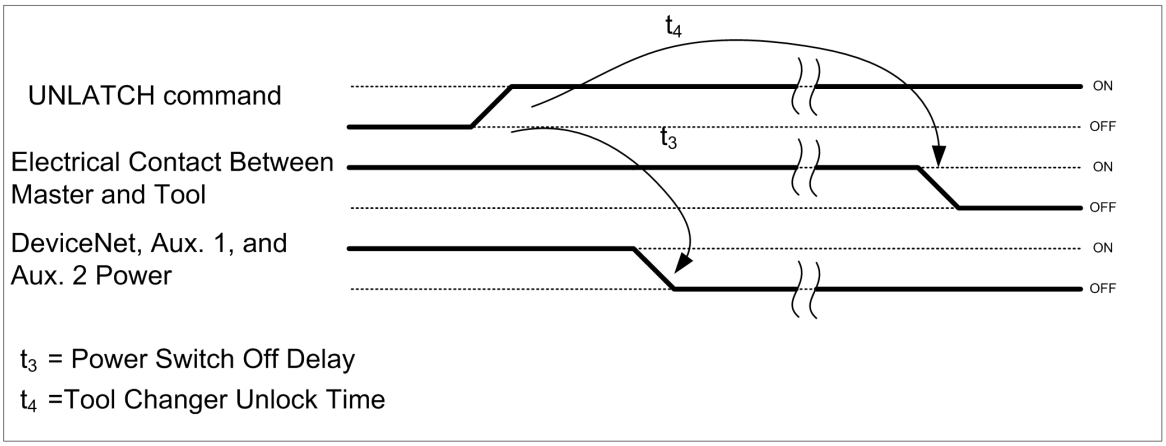

2.3 Tool Module

In addition to providing Tool-ID and Tool side TSI, the Tool module also functions as a pass through for DeviceNet and Auxiliary Power signals to downstream equipment. For more details refer to *Section 9—Drawings.*

2.3.1 Tool-ID

The Tool-ID for a particular tool is established from the setup of (5) pushbutton switches.

The first three switches, SW1, SW2 and SW3 set the tool number within a range from 0-255. The fourth switch, SW4 sets the Robot Number from 0-9. The fifth switch, SW5 sets the Line Number from 0-9. Refer to *Figure 2.5* for detailed information on Tool ID rotary switch setup for this configuration.

Figure 2.5—Tool-ID Switch Settings

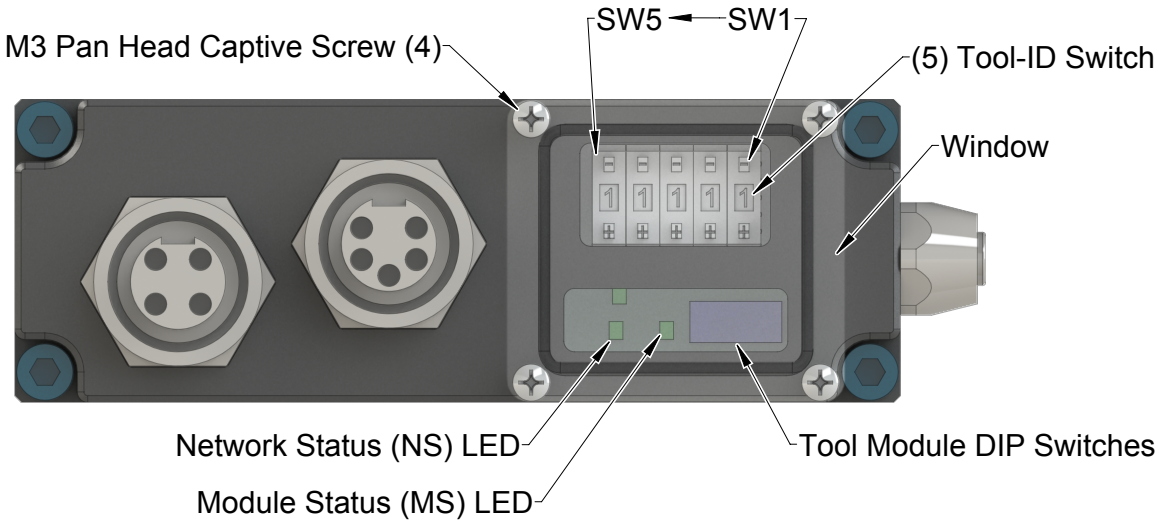

2.3.2 Setting the DIP Tool-ID Switches

1. Loosen the four M3 Pan head Captive Screws and remove the window.
2. Use a non-conductive tool (e.g., plastic stylus) to press on the Tool-ID pushbuttons to increase (+) or decrease (-) the digit value from 1 to 9. Set the Tool-ID to the desired unique five digit number from 11111 to 99999 for each tool. Refer to *Figure 2.5*.
3. Re-install the window and tighten the M3 Pan Head Captive Screws.

2.3.3 Module Status LED

The module status LED *Figure 2.6* is identified on the device board as “MS”. It provides device status for power and proper operation. Refer to *Table 2.1* for the module status LED’s functions.

2.3.4 Network Status LED

The network status LED *Figure 2.6* is identified on the device board as “NS”. It provides network status for power and communication. Refer to *Table 2.2* for the network status LED’s functions.

2.3.5 MAC ID

The MAC ID is set by either hardware or software configuration. The range is 0-63. In order for the MAC ID to be set by software, all DIP switch positions must be on. If the MAC ID is set by software, the Baud Rate must also be set by software. Refer to *Figure 2.6* for detailed information on DIP switch setup.

2.3.6 Baud Rate

Baud Rate is set by either hardware or software configuration. The possible settings are 125, 250 or 500Kbps. In order for the Baud Rate to be set by software, DIP switch positions 7 and 8 must be on. See *Figure 2.6* for DIP switch setup.

2.3.7 Termination Resistor

Internal termination resistance is not supported in the Tool module. Termination must be provided through the Master module or externally as required for proper operation of the network.

Figure 2.6—DeviceNet Tool module DIP Switch Settings

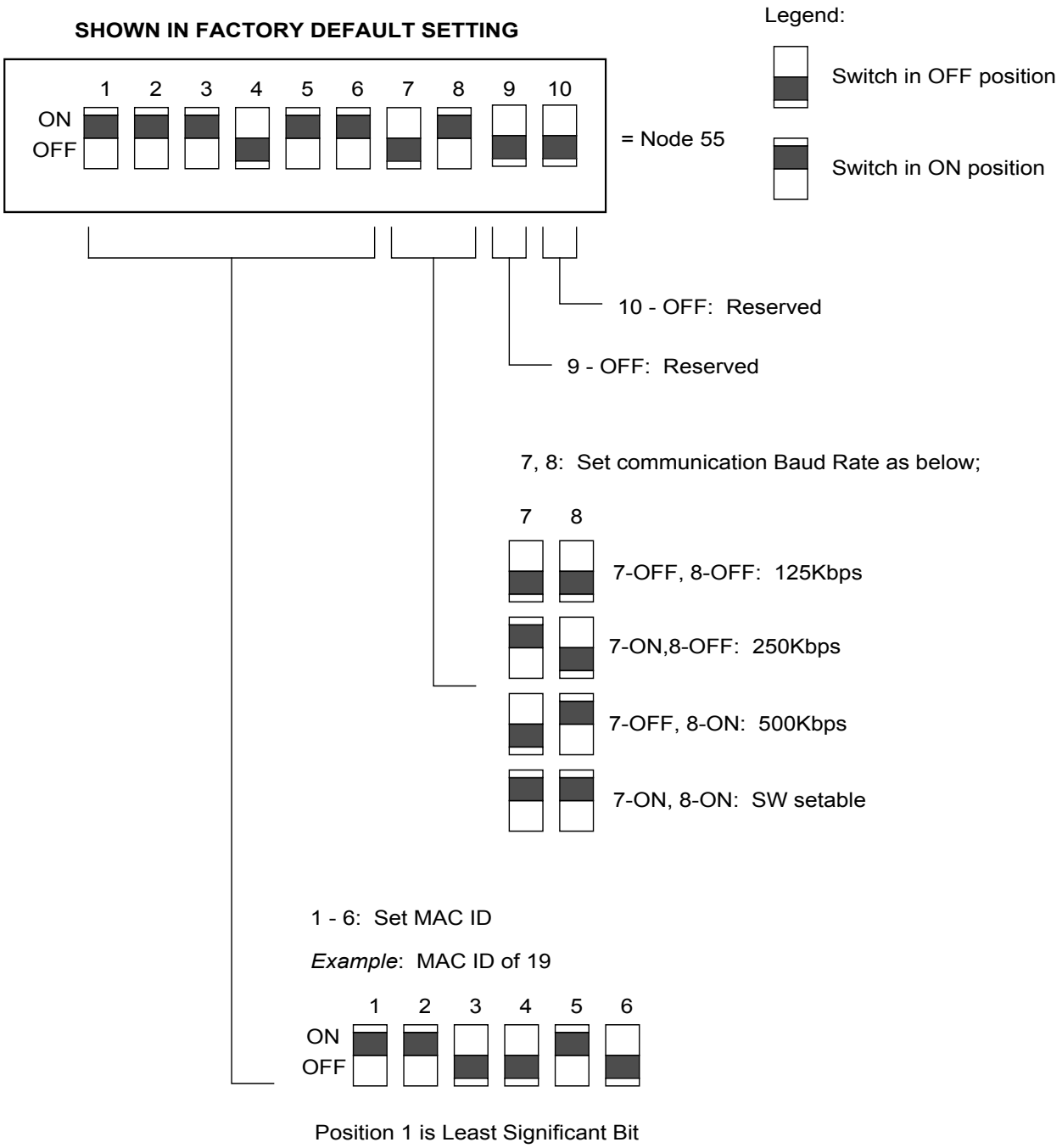

2.4 Tool Side TSI

The tool stand Interlock (TSI) circuit is provided to ONLY allow Tool release while in the stand or storage location as indicated by actuation of a customer-integrated switch.

A momentary action double-pole, single-throw mechanical limit switch is recommended to be used in conjunction with TSI. The limit switch, with 2 sets of normally open (NO) contacts, is integrated on the EOAT (reference *Figure 2.7*). An interface to the TSI circuit is made available to the customer via a 4-pin M12 connector on the Tool module. An off-the-shelf cord set can be utilized to connect this interface to the limit switch assembly.

Figure 2.7—Tool Stand Interlock (TSI)

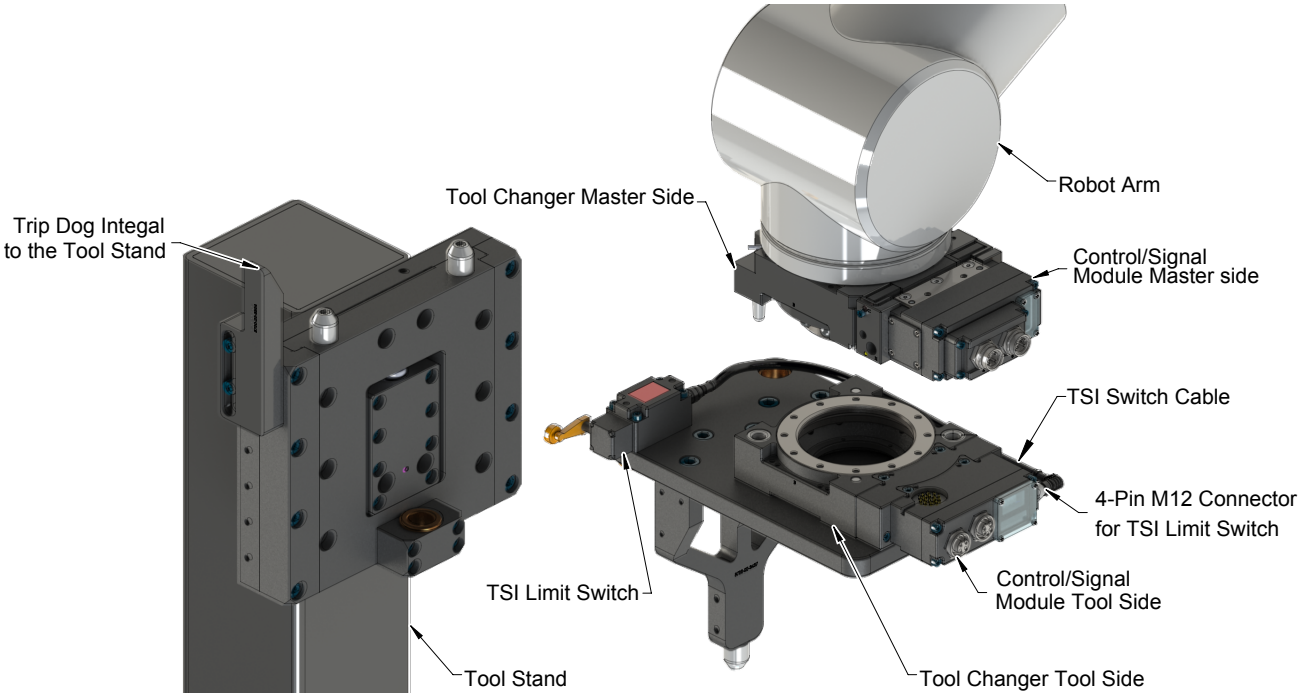

2.4.1 Tool Stand Interlock Safety Feature:

The Tool Stand Interlock (TSI) Feature is provided with this tool changer.

A 4-Pin Eurofast connector found on the Tool module is designed for use with a tool stand present switch. Two sets of NO, double-pole single-throw, contacts are required on the switch. One set energizes a tool-side relay to make the Valve circuit, while the second set provides an input for fault monitoring. This switch should be integrated onto the EOAT to sense when the tool is in the stand.

If an Unlatch command is given and the tool is not docked properly, the Unlatch command will not be recognized. This prevents the accidental release of the tool outside of the tool stand.

A teach plug is available to override the TSI safety feature during initial setup and maintenance situations.

2.4.2 DB12 Latch Enable Logic

The DB12 prevents the tool changer from latching if a Tool is not present. Tool presence is determined from the RTL sensors. Therefore, if the RTL sensors indicate that no Tool is present, then the Tool Changer will ignore the latch command (see *Table 2.3*).

Table 2.3—Latch Enable Logic

RTL	Latch Enable
0	0
1	1

NOTICE: The DB12 Master will NOT latch unless there is a Tool present. Tool presence is determined using the RTL sensors.

If the Master is left in a locked condition after being serviced it can be manually unlocked, refer to *Section 6.1.1—Solenoid Valve Manual Override Procedure*

Figure 2.8—Latch and Unlatch Circuit

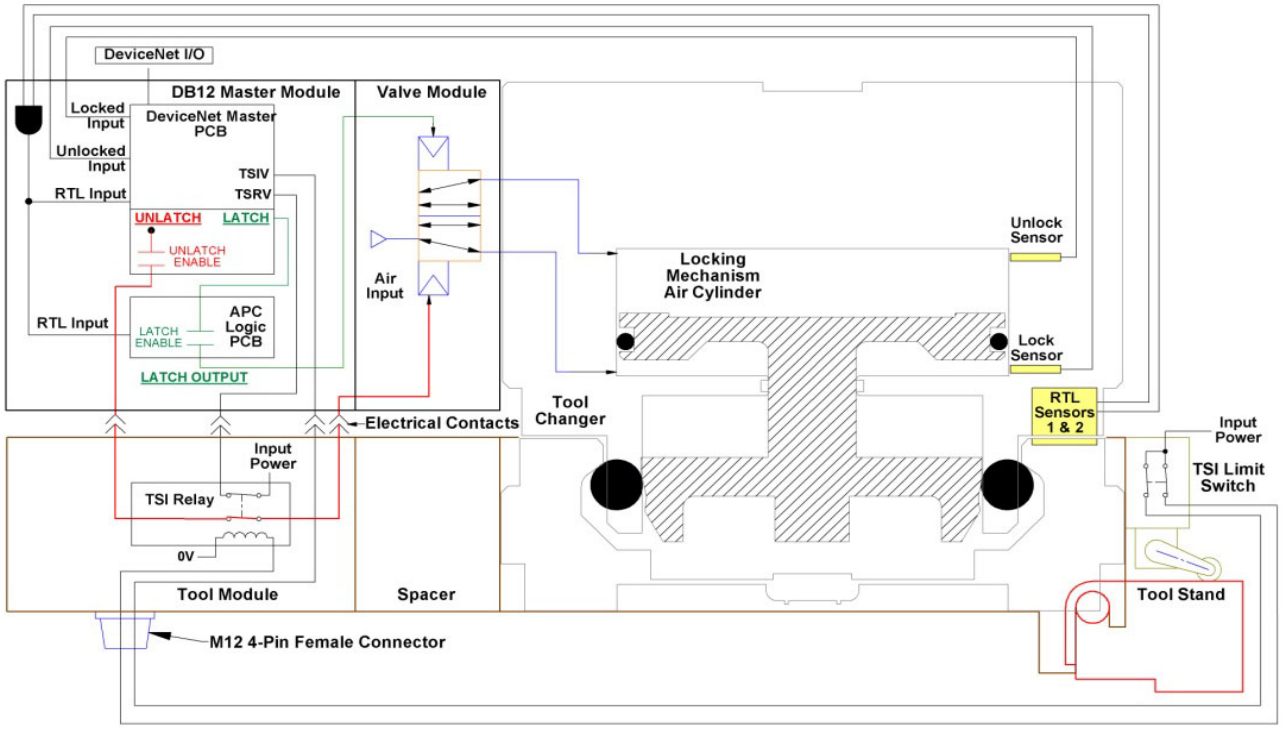

2.4.3 TSI Overview

The DB12M DB13T modules rely on the status of the TSIV input to determine when it is appropriate to unlatch the Tool. The RTL sensors indicate if the Master and Tool are coupled while the TSIV input indicates when the TSI mechanical switch on the Tool is actuated, thereby indicating that the Tool is in the stand.

The TSI Relay is located in the Tool module and is triggered by closure of the limit switch. When the EOAT is in the stand and the limit switch is closed, the TSI Relay is closed, thus making the TSI circuit through the tool side. When the EOAT is out of the stand the TSI Relay is open and the TSI circuit remains open regardless of any unintentional Unlatch command.

Control reliability monitoring of the Relays, limit switch and TSI circuit is achieved using the TSRV, and TSIV inputs, respectively. Refer to Table 3.3 for suggested fault monitoring conditions.

On the DB12 Tool module, the TSIV input is made available to the customer along with the TSI circuit via the 4-Pin TSI connector. Refer to the TSI connector details in drawings in *Section 9—Drawings* of this manual.

Table 2.4—Fault Monitoring				
Sensor/ Input1	**State1**	**Sensor/ Input2**	**State2**	**Comment**
RTL	0	Tool module [1]	Present[1]	RTL Not Operating Properly.[2]
TSIV	0	TSRV	1	TSI Relay or Switch Not Operating Properly.[2]
TSIV	1	TSRV	0	TSI Relay or Switch Not Operating Properly.
TSIV	1	Clear of Stand	Yes	Switch Failed Closed or Tied Off?[2]
TSRV	1	Clear of Stand	Yes	TSI Relay Failed Closed?

Notes:

1. *Slave module Present as evidenced by Tool Presence Input or ability to read Tool ID*
2. *Dangerous situation where an unintentional Unlatch command could result in Tool release.*

2.5 Software

Working EDS files for the Master and Tool nodes are available from our website (www.ati-ia.com/download/edsfiles) or by e-mail, reference the part numbers given below:

DB12-M Node EDS file 9031-20-1040

DB13-T Node EDS file 9030-20-1008

I/O bitmaps for the DeviceNet nodes are provided in the tables below. The default settings are Node 54 for the Master module and Node 55 for the Tool module.

Table 2.5—I/O Bitmap, Robot Input From Master DeviceNet Node 54 (DB12-M Module)		
Bit Number	**Name**	**Description/Function**
0	Lock	Tool Changer Lock Prox I/P
1	Unlock	Tool Changer Unlock Prox I/P
2	Solenoid Energized	Latch/Unlatch Solenoid Energized I/P
3	Auxiliary Power Available	Auxiliary Power Present I/P
4	RTL	Ready-to-Lock Prox I/P
5	TSIV	TSI Switch Verify I/P
6	N/A	N/A
7	TSRV	TSI Relay Verify I/P

Table 2.6—I/O Bitmap, Robot Output To Master DeviceNet Node 54 (DB12-M Module)		
Bit Number	**Name**	**Description/Function**
0	Latch (Lock)	ToolChanger Valve Latch O/P
1	Unlatch (Unlock)	ToolChanger Valve Unlatch O/P
2	N/A	N/A
3	N/A	N/A
4	N/A	N/A
5	N/A	N/A
6	N/A	N/A
7	N/A	N/A

*Latch O/P only applicable for Double Solenoid Valve Adapter Versions

Table 2.7—I/O Bitmap, Robot Input From Tool DB13-T Module (Node 55)			
Bit Number		**Name**	**Description/Function**
0	Low Bit	Tool Number Bit 1	Tool Number Bit 1
1		Tool Number Bit 2	Tool Number Bit 2
2		Tool Number Bit 4	Tool Number Bit 4
3		Tool Number Bit 8	Tool Number Bit 8
4		Tool Number Bit 16	Tool Number Bit 16
5		Tool Number Bit 32	Tool Number Bit 32
6		Tool Number Bit 64	Tool Number Bit 64
7	High Bit	Tool Number Bit 128	Tool Number Bit 128
8	Low Bit	Robot Number Bit 1	Robot Number Bit 1
9		Robot Number Bit 2	Robot Number Bit 2
10		Robot Number Bit 4	Robot Number Bit 4
11		Robot Number Bit 8	Robot Number Bit 8
12		Line Number Bit 1	Line Number Bit 1
13		Line Number Bit 2	Line Number Bit 2
14		Line Number Bit 4	Line Number Bit 4
15	High Bit	Line Number Bit 8	Line Number Bit 8

3. Installation

The control/signal modules are typically installed by ATI prior to shipment. The steps below outline the field installation or removal as required. For wiring information refer to *Section 9—Drawings*.

WARNING: Do not perform maintenance or repair on Tool Changer or modules unless the Tool is safely supported or docked in the tool stand, all energized circuits (e.g. electrical, air, water, etc.) are turned off, pressurized connections purged and power discharged from circuits in accordance with the customer's safety practices and policies. Injury or equipment damage can occur with Tool not docked and energized circuits on. Dock the Tool safely in the tool stand, turn off and discharge all energized circuits, purge all pressurized connections, verify all energized circuits are de-energized before performing maintenance or repair on Tool Changer or modules.

3.1 Master Module Installation

Tools required: *5 mm hex key*

Supplies required: *clean rag*

1. If the Tool Changer is already installed, dock the Tool side of the Tool Changer safely in the tool stand and uncouple the Tool Changer to allow clear access to the Master and Tool plates of the Tool Changer.
2. Turn off and de-energize all energized circuits (e.g. electrical, air, water, etc.).
3. It may be necessary to clean the mounting surface on the valve adapter prior to installing the module in order to remove any debris that may be present.
4. Using the ledge feature, place the module into the appropriate location on the valve adapter. Align the module with the valve adapter using the dowels in the bottom of the ledge feature. Refer to *Figure 3.1*.
5. If fasteners do not have pre-applied adhesive, apply Loctite 242® to the supplied M6 socket head cap screws. Install the (2) M6 socket cap head screws securing the module to the valve adapter and tighten to 70 in-lbs (7.9 Nm).
6. Connect the power and signals cable to the module. Ensure that the connectors are cleaned prior to being secured as appropriate.
7. Set the DIP switches. Refer to *Section 2.1.1—Setting the DIP Switches on the Master module*.
8. After installation is complete, module(s) may be placed in normal operation. Note: After a few seconds the module should be operating on the network.

Figure 3.1—DB12-M Module Installation

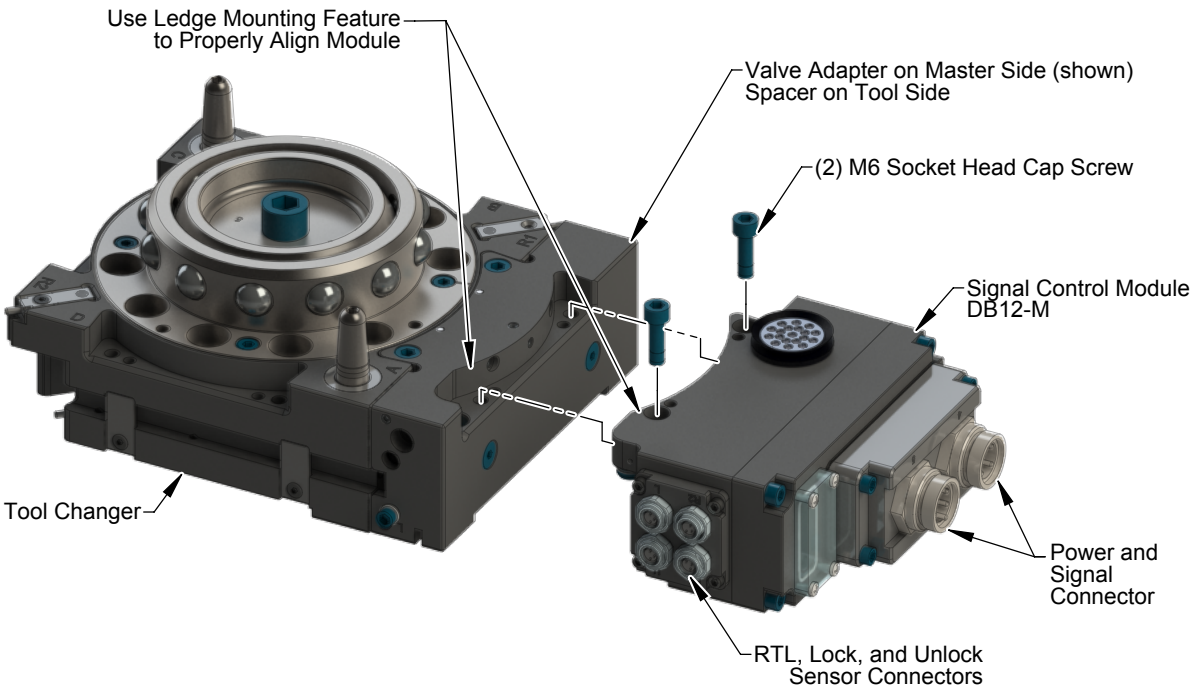

3.2 Master Module Removal

Tools required: *5 mm hex key*

1. If the Tool Changer is already installed, dock the Tool side of the Tool Changer safely in the tool stand and uncouple the Tool Changer to allow clear access to the Master and Tool plates of the Tool Changer.
2. Turn off and de-energize all energized circuits (e.g. electrical, air, water, etc.).
3. Disconnect the Lock, Unlock, RTL (R1), RTL (R2) sensor cables from the DB12-M module.
4. Disconnect the power and signal cable from the DB12-M module.
5. Prior to removing the module use a marker pen to label the Tool Changer and module body where the module is to be re-installed.
6. Remove the (2) M6 socket head cap screws and lower the module until it clears the guide pin. Set module aside. Refer to *Figure 3.1*.
7. Depending upon the service or repair being done, customer connections up to the module may or may not need to be disconnected.
8. Remove the socket head cap screws and lift the module from the Tool Changer.

CAUTION: It is recommended, not to use fasteners with pre-applied adhesive more than three times. Fasteners used more than three times may come loose and cause equipment damage. Discard fasteners used more than three times and install new fasteners with pre-applied adhesive.

3.3 Tool Module Installation

Tools required: *5 mm hex key*

Supplies required: *clean rag*

1. If the Tool Changer is already installed, dock the Tool side of the Tool Changer safely in the tool stand and uncouple the Tool Changer to allow clear access to the Master and Tool plates of the Tool Changer.
2. Turn off and de-energize all energized circuits (e.g. electrical, air, water, etc.).
3. It may be necessary to clean the mounting surface on the tool adapter prior to installing the module in order to remove any debris that may be present.
4. Using the ledge feature, place the module into the appropriate location on the tool adapter. Align the module with the tool adapter using the dowels in the bottom of the ledge feature. Refer to *Figure 3.2*.
5. If fasteners do not have pre-applied adhesive, apply Loctite 242 to the supplied M6 socket head cap screws. Install the (2) M6 socket cap head screws securing the module to the valve adapter and tighten to 70 in-lbs (7.9 Nm).
6. Connect the power and signal, and TSI switch cables to the Tool module. Ensure that the connectors are cleaned prior to being secured as appropriate.
7. Set the Tool-ID and DIP switches on the Tool module. Refer to *Section 3.7—Setting the Tool-ID and DIP Switches.*
8. After installation is complete, module(s) may be placed in normal operation.

Figure 3.2—DB13-T Module Installation

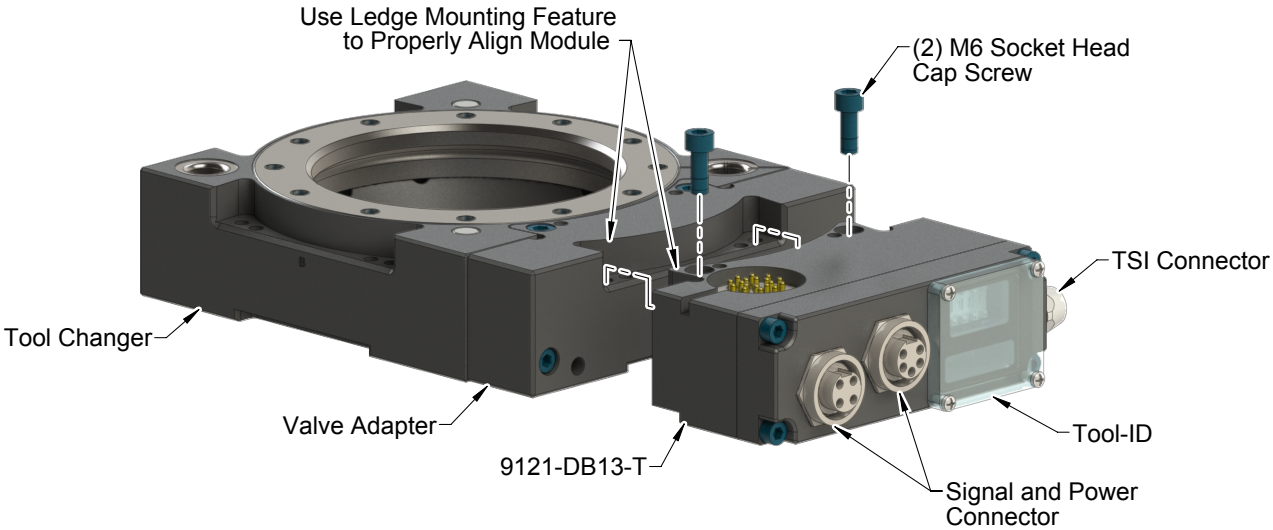

3.4 Tool Module Removal

Tools required: *5 mm hex key*

1. If the Tool Changer is already installed, dock the Tool side of the Tool Changer safely in the tool stand and uncouple the Tool Changer to allow clear access to the Master and Tool plates of the Tool Changer.
2. Turn off and de-energize all energized circuits (e.g. electrical, air, water, etc.).
3. Disconnect the power and signal, and TSI switch cables from the Tool module.
4. Remove the (2) M6 socket head cap screws and lift the module until it clears the guide pin. Set module aside. Refer to *Figure 3.2*.

CAUTION: It is recommended, not to use fasteners with pre-applied adhesive more than three times. Fasteners used more than three times may come loose and cause equipment damage. Discard fasteners used more than three times and install new fasteners with pre-applied adhesive.

3.5 DeviceNet Configuration

Various parameters for the DeviceNet modules need to be configured prior to operating the Tool Changer. Please refer to *Section 2—Product Information* of this manual for detailed information on installation and operation of the DeviceNet modules.

3.6 Utility Schematic

Refer to drawings in *Section 9—Drawings* of this manual for customer interface and wiring details for the DB12-M/DB13-T modules.

3.7 Setting the Tool-ID and DIP Switches

Tools required: *Screwdriver*

Push button switches are provided on the Tool module for setting of a unique digit Tool-ID number from (0-9).

1. Loosen (4) M3 pan head captive screws and remove Tool-ID window.

Figure 3.1—Set Tool-ID

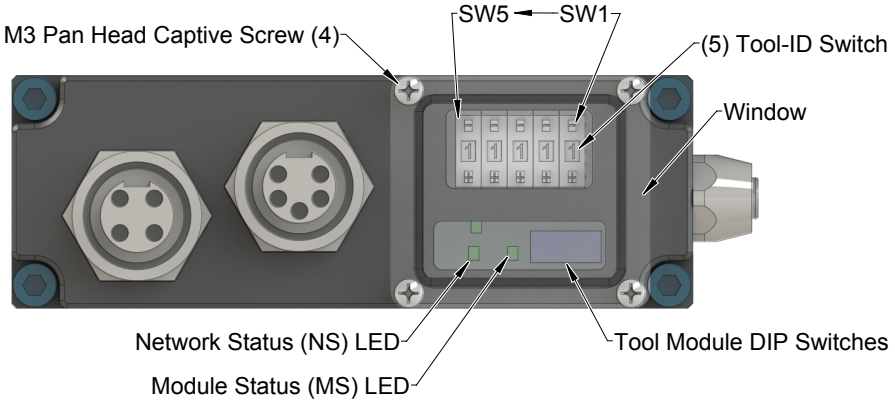

2. Use a non-conductive tool (e.g., plastic stylus) to press on the Tool-ID push buttons to increase (+) or decrease (-) the digit value. Set the Tool-ID to the desired unique digit number. Refer to *Section 9—Drawings* for Tool-ID output tables.

NOTICE: After adjustment is completed, ensure that the seal and window are re-positioned correctly to prevent a leakage path to inside the module.

3. Set the DIP switches. Refer to *Section 2.3.2—Setting the DIP Tool-ID Switches*.
4. Re-install the Tool-ID window and tighten the (4) M3 pan head captive screws.

4. Operation

4.1 Lock, Unlock, and RTL Sensor Cable LED Behavior

The Lock, Unlock, and RTL sensor cables are equipped with (2) LEDs. The green LED indicates the sensor has power and the yellow LED indicates the switch has been made, The LED behavior is affected by the DB12 control/signal module. The behavior shown in *Table 4.1* is specific for the Tool Changer with RTL sensors wired in series and equipped with a DB12 control/signal module.

Table 4.1—Sensor Cable LED Behavior for Common Tool Changer Positions

Tool Changer Position	Sensor Cable LED Behavior			
State 1. Unlocked	RTL (R1)	OFF OFF	ON ON	**Unlock (U)**
	RTL (R2)	ON OFF	ON OFF	Lock (L)
When RTL Sensor Inputs go True (Master and Tool plates parallel and at a distance of 1.22 mm or less from each other)	**RTL (R1)**	ON ON	ON ON	**Unlock (U)**
	RTL (R2)	ON ON	ON OFF	Lock (L)
State 2. Locked (Only occurs when Tool is Present)	**RTL (R1)**	ON ON	ON OFF	Unlock (U)
	RTL (R2)	ON ON	ON ON	**Lock (L)**
State 3. Missed Tool (Locked without Tool being Present)	RTL (R1)	OFF OFF	ON OFF	Unlock (U)
	RTL (R2)	ON OFF	ON OFF	Lock (L)

Figure 4.1—Lock, Unlock, and RTL Sensor Cable LED Behavior (Shown in Locked Position)

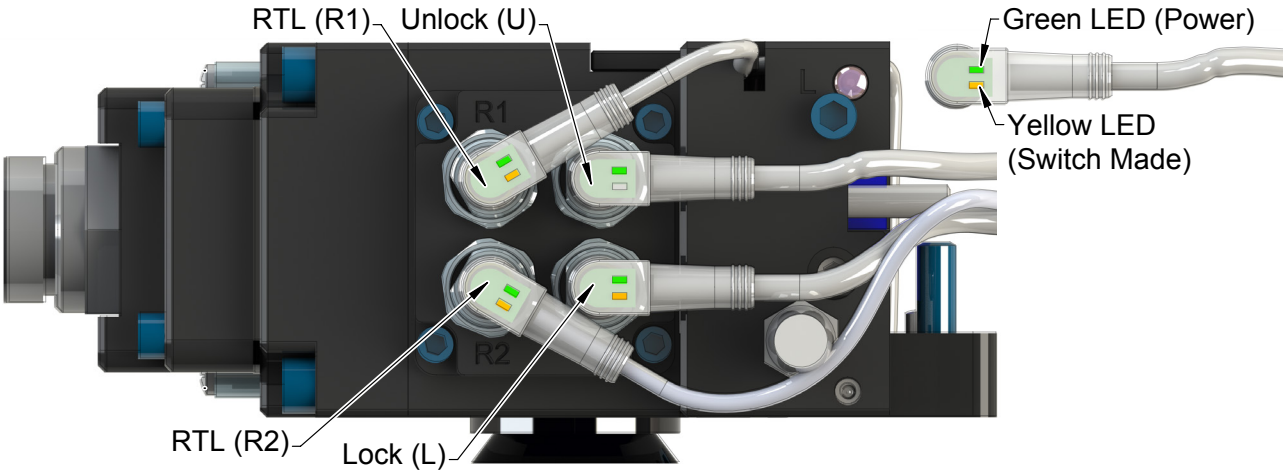

4.2 Recommended Sequence of Operation

A recommended Sequence of Operations is provided in Appendix A of this manual.This Recommended Sequence of Operations procedure is to be used as a general guide when programming a robot or PLC for use with a Tool Changer and DB12M DB13T control/signal modules. This procedure is intended for "automatic" modes used during normal application processes.

1. **Start**→The robot and Tool Changer Master are free of the stand or storage location, the Tool Changer is uncoupled and the Tool Changer locking mechanism is fully retracted (**Unlocked** condition). The Tool is by itself in the Tool Stand.

   a. The **RTL** input is false.
   b. The ATI Tool and any downstream device are offline.
   c. The **Auxiliary Power Available** input is true provided the Auxiliary Power 1 power supply is on.
   d. The **TSIV** input is false.
   e. The **TSRV** input is false.

NOTICE: In the event that the Tool Changer is locked without a Tool, it must be unlocked using the manual override button on the valve, refer to *Section 6.1.1—Solenoid Valve Manual Override Procedure.*

2. Ensure the Master is Unlocked. (The Master must be unlocked prior to entering the Tool to prevent the ball bearings from impinging on the Tool bearing race.)

   a. The **Latch** output command is false and the Unlatch output command is true.
   b. The **Solenoid Energized** input is true.
   c. The **Unlocked** input is true and remains true, indicating that the Tool Changer locking mechanism is fully retracted.

NOTICE: For maximum safety, ATI strongly recommends editing the robot program to verify that TSIV is OFF just before tool pick up.

3. Robot and Master move into the tool, are parallel and within 0.06" of the Tool

   a. The **TSIV** inputs go true, indicating that the Master and Tool are in close proximity of each other and verifying the operation of the TSI limit switch.
   b. Power is not yet available on the Tool.
   c. The **RTL** input is true, indicating that it is okay to couple the Tool.

4. Couple the Tool Changer.

   a. The **Unlatch** output is made false and the **Latch** output is made true.
   b. The **Unlocked** input goes false a short time later, indicating piston travel. Subsequently, the **Locked** input goes true and remains true, indicating that the coupling operation is complete. It is recommended that the **Latch** command be made false after the **Locked** input goes true.
   c. The Arc Prevention circuit makes power available to the Tool.

Sometime thereafter, Tool-ID will become available and communications should be established with the downstream DeviceNet device(s).

NOTICE: For maximum safety, ATI strongly recommends editing the robot program to verify that TSIV is ON at tool pick up.

5. Robot moves away from the tool stand with the Tool Changer coupled.
   a. The **TSI Limit Switch** becomes deactivated, and the **TSIV and TSRV** inputs turn false.

NOTICE: For maximum safety, ATI strongly recommends editing the robot program to verify that TSIV is OFF when the tool is above the stand immediately after tool pickup.

6. Normal operation
   a. The following inputs are true:
      i. Locked
      ii. Auxiliary Power Available
      iii. RTL
   b. The following inputs are false:
      i. Solenoid Energized
      i. Unlocked
      ii. TSIV
      iii. TSRV
   c. The following outputs are false:
      i. Latch
      ii. Unlatch
7. Robot moves into the tool stand with the Tool Changer coupled.
   a. When the Tool is returned to the stand, the **TSI limit switch** becomes activated and the **TSIV** input goes true, indicating that it is safe to uncouple the Tool Changer.
   b. The **TSRV** becomes true.
8. Uncouple the Tool Changer.
   a. The **Latch** output is made false and the **Unlatch** output is made true.
   b. Power on the Tool turns off.
   c. Communication is lost with the downstream devices.
   d. The **Tool-ID** becomes unavailable.
   e. The **Locked** input goes false a short time later and subsequently the **Unlocked** input goes true, indicating that the uncoupling operation is complete.
9. Robot and Master move away from the Tool, are parallel and between 0.125” to 0.06” of the Tool.
   a. The **RTL** inputs are false.
10. Robot and Master move away from the tool, are parallel at a distance greater than 0.15” from the tool.
11. Robot and Master are in Free space
   a. The following inputs are true:
      i. Unlocked
      ii. Auxiliary Power Available
   b. The following inputs are false:
      i. Locked
      ii. RTL
      iii. TSIV
      iv. TSRV

5. Maintenance

Once installed the operation of the control/signal modules is generally trouble free. The modules are not designed to be field serviced as all point-to-point wiring connections are soldered. Component replacement is limited to the V-ring seal on the Master.

WARNING: Do not perform maintenance or repair on Tool Changer or modules unless the Tool is safely supported or docked in the tool stand, all energized circuits (e.g. electrical, air, water, etc.) are turned off, pressurized connections purged and power discharged from circuits in accordance with the customer's safety practices and policies. Injury or equipment damage can occur with Tool not docked and energized circuits on. Dock the Tool safely in the tool stand, turn off and discharge all energized circuits, purge all pressurized connections, verify all energized circuits are de-energized before performing maintenance or repair on Tool Changer or modules.

If the Tool Changer is being used in dirty environments (e.g., welding or deburring applications), care should be taken to limit the exposure of the Tool Changer. Idle Tool assemblies should be covered to prevent debris from settling on the mating surface. Also, the Master assembly should be exposed for only a short period of time during Tool change and down time.

Under normal conditions, no special maintenance is necessary however it is recommended that periodic inspections be performed to assure long-lasting performance and to assure that unexpected damage has not occurred. Perform the following visual inspection monthly:

- Inspect mounting fasteners to verify they are tight and if loose, tighten to the proper torque.
- Cable connections should be inspected during maintenance periods to ensure they are secure. Loose connections should be cleaned and re-tightened as appropriate. Inspect cable sheathing for damage, repair or replace damaged cabling. Loose connections or damaged cabling are not expected and may indicate improper routing and/or strain relieving.
- Inspect the Master and Tool pin blocks for any pin damage, debris or darkened pins. Refer to *Section 5.1—Pin Block Inspection and Cleaning*.
- Inspect V-ring seals for wear, abrasion, and cuts. If worn or damaged, replace. Refer to *Section 6.2.1—Seal Replacement*.

5.1 Pin Block Inspection and Cleaning

Tools required: *Nylon Brush (ATI part number 3690-0000064-60)*

1. Place the Tool in a secure location.
2. Uncouple the Master and Tool plates.
3. Turn off and de-energize all energized circuits (for example: electrical, pneumatic, and hydraulic circuits).
4. Inspect the Master and Tool pin blocks for debris or darkened pins.

Figure 5.1—Inspect Master and Tool Pin Blocks

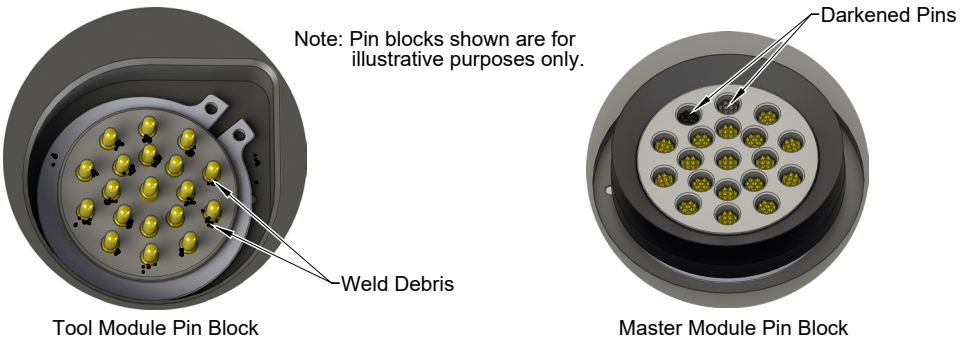

5. If debris or darkened pins are present, use a vacuum to remove the debris, and clean using a nylon brush (ATI part number 3690-0000064-60).

> **NOTICE:** Do not use an abrasive media and/or cleaners or solvents to clean the contact pins. Using abrasive media and/or cleaners or solvents will cause damage to the contact surface or cause pins to stick. Clean contact surfaces with a vacuum or non-abrasive media such as a nylon brush (ATI part number 3690-0000064-60).

Figure 5.2—Clean Pin Blocks with a Nylon Brush

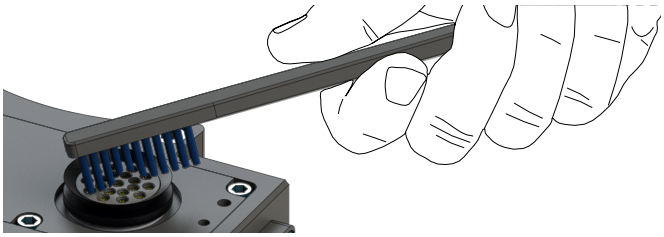

6. Inspect the Master and Tool pin blocks for stuck pins or pin block damage.

Figure 5.3—Stuck Pin and Pin Block Damage

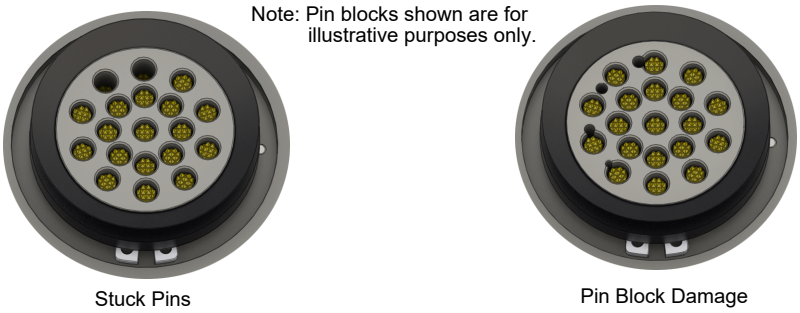

7. If pins become stuck or if there is damage to the pin block, contact ATI for either a possible pin replacement procedure or module replacement.
8. Safely resume normal operation.

6. Troubleshooting and Service Procedures

The following section provides troubleshooting information to help diagnose conditions with the Tool Changer and service procedures to help resolve these conditions.

WARNING: Do not perform maintenance or repair on Tool Changer or modules unless the Tool is safely supported or docked in the tool stand, all energized circuits (e.g. electrical, air, water, etc.) are turned off, pressurized connections purged and power discharged from circuits in accordance with the customer's safety practices and policies. Injury or equipment damage can occur with Tool not docked and energized circuits on. Dock the Tool safely in the tool stand, turn off and discharge all energized circuits, purge all pressurized connections, verify all energized circuits are de-energized before performing maintenance or repair on Tool Changer or modules.

6.1 Troubleshooting

Refer to the table below for trouble shooting information.

Table 6.1—Troubleshooting

Symptom	Possible Cause	Correction
Unit will not lock or unlock	Debris caught between the Master and Tool plates.	Clean debris from between Master and Tool plates. Verify mounting fasteners is secure and does not protrude above the mating surfaces.
	Ball bearings are not moving freely.	Verify the ball bearings are moving freely. Clean and lubricate as needed. Refer to the Maintenance section of the Tool Changer manual for instructions.
	Air supply not to specifications.	Check air supply. Refer to the Installation section of the Tool Changer manual for specifications.
	Valve adapter exhaust muffler clogged.	The valve adapter exhaust muffler may be clogged. Refer to the valve adapter manual for more information.
	TSI switch not functioning properly.	Verify the TSI switch is functioning and properly adjusted.
	Signals are mapped incorrectly.	Verify signals are mapped and are communicating properly. Refer to *Section 9—Drawings* for electrical schematic.
	Master and Tool are within the specified No-Touch zone.	Verify the Master and Tool are within the specified No-Touch zone when attempting to lock. *Refer to Section 3—Installation* – the tool stand Design Section of the Tool Changer manual for specifications.
	Solenoid valve not functioning.	The valve adapter exhaust muffler may be clogged. Refer to the valve adapter manual for more information.
Sensors not operating properly (but DeviceNet is operating correctly).	Tool plate is not secured properly or debris is trapped between surfaces.	Ensure that the Tool plate is securely held to the Master plate, that nothing is trapped between their surfaces.
	Valve adapter exhaust muffler clogged.	The valve adapter exhaust muffler may be clogged. Refer to the valve adapter manual for more information.
	Sensor cables damage or incorrectly connected.	Verify the cables are connected correctly and not damaged, replace if damaged. Refer to the Troubleshooting Section of the Tool Changer manual.
	Sensors are not set correctly or not functioning.	Verify the sensors are set correctly and functioning. Refer to the Troubleshooting Section of the Tool Changer manual.

Table 6.1—Troubleshooting		
Symptom	**Possible Cause**	**Correction**
Loss of Communication	Damaged signal cabling	Check/Replace signal cabling up- and down-stream of Tool Changer modules.
	Worn or damaged contact pins	Inspect module contact pins for debris/wear/damage.
	Product upstream and downstream of Tool Changer failed or damaged	Check product upstream and downstream of Tool Changer for failure. This failure can “appear” to be caused by the Tool Changer or affect Tool Changer performance.
No Power on the Tool-side	Latch command not issued	Verify the Latch command has been issued by the robot.
	Loss of DeviceNet power on the Master.	Restore DeviceNet Power to the Master.
Tool Changer is locked without Tool	Tool Changer was inadvertently locked without Tool.	Unlock Tool Changer Manually refer to *Section 6.1.1—Solenoid Valve Manual Override Procedure.*

6.1.1 Solenoid Valve Manual Override Procedure

The manual override procedure should be used when the Tool Changer is locked without the Tool plate attached. The control module safety circuit does not allow the Tool Changer to be unlatched without the Tool plate attached and the tool in the tool stand.

WARNING: Do not use the solenoid valve manual override if the tool is locked to the Master. Using the manual override will release the Tool and may cause bodily injury or damage to equipment. If the Tool is attached to the Master, it must be secured in the tool stand or in a location where the tool weight is supported before using the manual override.

CAUTION: The manual override is not intended for normal operations. Manual override is to be used in situations where no alternative is available to unlock the Master. Do not execute the Latch command unless the Master and the Tool are ready to be coupled.

Tools required: *3 mm hex key, 2 mm ball end hex key*

1. Using a 3 mm hex key, remove the M4 socket head cap screws, warning label, and nylon washer from the Unlock side of the solenoid valve. The Unlock side is marked with a “U”.

CAUTION: Applying excess force can damage the solenoid or cause the override button to stick in one position. Actuation of valve override buttons requires about 1 mm of travel and minimal of force. Use a non-sharp object, similar to ball nose 2 mm hex key, to gently depress the override button; an air release should be heard when the solenoid is activated.

2. Insert a 2 mm ball end hex key in the unlock valve screw hole and gently depress the valve override button. An air release should be heard when the solenoid is actuated. Make sure the locking mechanism is fully retracted.
3. Using a 3 mm hex key, replace the M4 socket head cap screws, warning label, and nylon washer and tighten the screw.

Figure 6.1—Manual Override

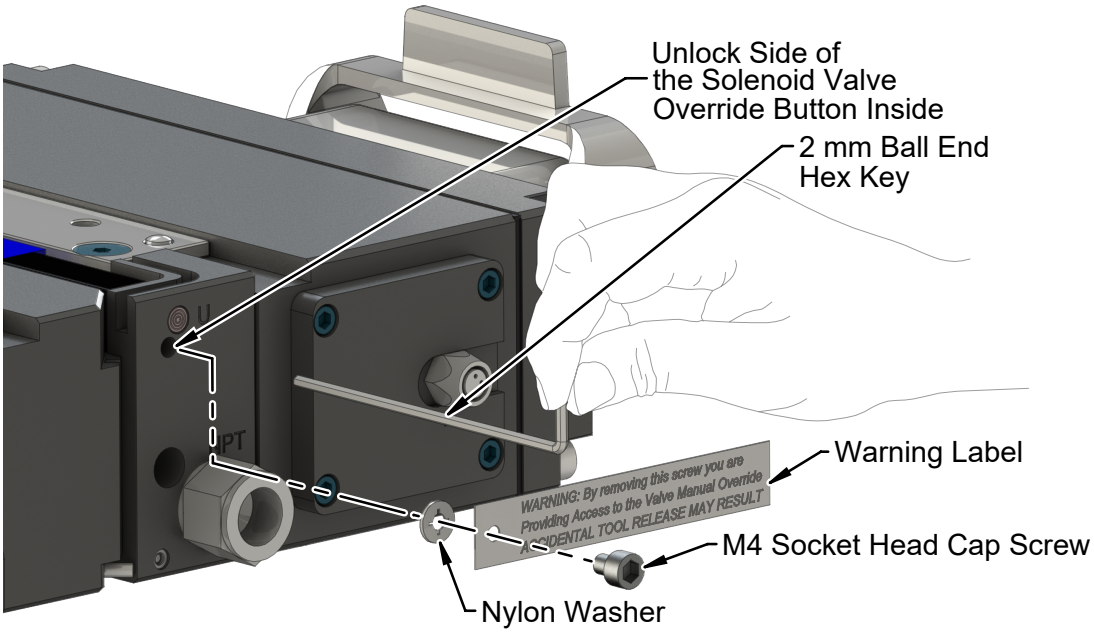

6.2 Service Procedures

The following service procedures provide instructions for component replacement and adjustment.

6.2.1 Seal Replacement

Parts required: *Refer to Section 9—Drawings.*
The seal protects the electrical connection between the Master and Tool module. Replace the seal if it becomes worn or damaged.

1. Place the Tool in a secure location.
2. Uncouple the Master and Tool plates.
3. Turn off and de-energize all energized circuits (for example: electrical, pneumatic, and hydraulic circuits).
4. To remove the existing seal, pinch the edge of the seal and pull the seal away from the pin block on the Master module.
5. To install a new seal, stretch the new seal over the shoulder of the pin block.
6. Push the seal hub down against the pin block.
7. Safely resume normal operation.

Figure 6.2—V-ring Seal Replacement

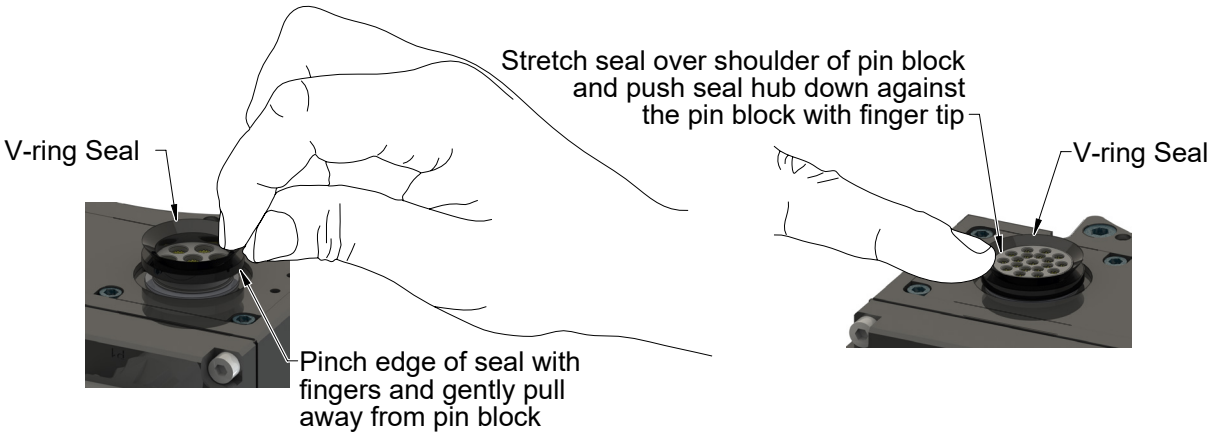

7. Serviceable Parts

Refer to *Section 9—Drawings.*

8. Specifications

Table 8.1—DB12 Master module Specifications	
9121-DB12-M	Quick Connect Capable DeviceNet Master module with Arc Prevention, TSI on Tool (No RTL Bypass), Lock, Unlock, and RTL sensing with LED cables on the Master (RTL Sensors in Series). Tool ID from the Tool module also supported. Mates with DB13 Tool.
Factory Default Configuration	MAC ID 54, Baud 500 Kbps, termination resistance “on”.
Interface Connections	Auxiliary Power: Mini, 4-Pin Male supporting two Auxiliary Power Circuits DeviceNet: Mini, 5-Pin Male Integrated Tool Changer I/O: • 4X M8, 3-pin female connectors supporting Tool Changer Locked, Unlocked, and Ready-to-Lock proximity sensors. RTL sensors are connected in series. • 3-pin internal pin block used to transmit Latch and Unlatch signals to the solenoid valve.
Electrical Rating	Power Pass-Thru • Aux1 V+ and Aux2 V+ Power: 5A, 12-30 VDC *Note: Arc prevention is applied to Aux1 V+ and Aux2 V+ power.* • CAN V+ (DeviceNet) Power: 5A, 12-30 VDC *Note: Arc prevention is applied to CANV+ power.*
	Signal Pass-Thru: 3 Amp, 30VDC maximum
	Tool Changer Control: • Lock, Unlock, and Ready-to-Lock sensors: 10-30 VDC operational voltage *Note: CAN V+ Power provides power to the L, U, and RTL sensors.* • Latch/Unlatch integrated solenoid valve: 21-26 VDC operational voltage *Note: Aux1 V+ Power provides power to the Latch/Unlatch solenoid valve.*
	Valve Control Power: • Latch and Unlatch Valve control: 19-29 VDC operational voltage.
*Current Draw	183mA @ 24VDC: Master and Tool coupled (Locked, RTL1, and RTL2 sensors “on”, Limit Switches/ TSI Circuits made, i.e.; TSIV1 “on”)
Temperature	-20°F to 150°F (-28.9 to 65.6°C).
Weight	2.24 lbs (1.02 kg)
*Current Draw totals for DeviceNet-powered circuits, not including downstream I/O devices and Auxiliary powered valves. Please refer to the module manufacturer for these specifications.	

Table 8.2—DB13 Tool module Specifications	
9121-DB13-T	Quick Connect Capable DeviceNet Tool with DeviceNet, 5 independent switch Tool-ID and mechanical switch TSI, Supports Arc Prevention on the Master. Mates with 9121-DB12-M.
Factory Default Configuration	MAC ID 55, Baud 500 Kbps, No termination resistance. (5) Independent Tool ID switches, each reading a (0–9) position (all factory set to Tool Position 1).
Interface Connections	Auxiliary Power: Mini, 4-Pin, Female DeviceNet: Mini, 5-Pin, Female TSI connectors: M12, 4-Pin, Female
Electrical Rating	Power Pass-Thru: • Aux1 V+ and Aux2 V+ Power: 5A, 12-30 VDC • CAN V+ (DeviceNet) Power: 5A, 12-30 VDC
	Signal Pass-Thru: 3 Amp, 30VDC maximum
*Current Draw	61 mA @ 24 VDC: Tool Only
Temperature	-20°F to 150°F (-28.9 to 65.6°C)
Weight	1.35 lbs (0.61 kg)
*Current Draw totals for DeviceNet-powered circuits, not including downstream I/O devices and Auxiliary powered valves. Please refer to the module manufacturer for these specifications.	

9. Drawings

Drawings are available on the *ATI website* or by contacting an ATI representative.