Table of Contents

C. Control and Signal Modules C-2

DT2— Ethernet Pass-Through Module with Arc Prevention C-2

1. Product Overview C-2

1.1 DT2 Master Module C-3

1.2 DT2 Tool Module C-3

2. Product Information C-4

2.1 Master Module Information C-4

2.1.1 Ethernet/IP Quick Connect Signal C-4

2.1.2 Arc Prevention Circuit C-5

3. Installation C-6

3.1 Module Installation C-6

3.2 Module Removal C-7

3.3 Utility Schematic C-7

4. Operation C-7

5. Maintenance C-8

5.1 Pin Block Inspection and Cleaning C-9

6. Troubleshooting and Service Procedures C-10

6.1 Troubleshooting C-10

6.2 Service Procedures C-11

6.2.1 Seal Replacement C-11

7. Serviceable Parts C-12

7.1 Master Module Serviceable Parts C-12

7.2 Tool Module Serviceable Parts C-13

7.3 Accessories C-13

8. Specifications C-14

9. Drawings C-15

C. Control and Signal Modules

DT2— Ethernet Pass-Through Module with Arc Prevention

1. Product Overview

Control and signal modules provide power and Ethernet/IP signals to downstream I/O in Utility Coupler applications. When the modules are coupled, the V-ring seal forms a water resistant but not waterproof seal around the pin block.

Compliant spring pins are provided on the Master and fixed contact pins on the Tool. To avoid unintentional human contact, the Master spring pins are recessed below an insulated surface on both the power and signal circuits.

Coupling under power can cause arcing to occur between the Master and Tool side contact pins. arcing damages the contact pins and can drastically reduce their service life. An arc prevention circuit turns off switched and unswitched auxiliary power during coupling and uncoupling of the tool, when arcing is most likely to occur. The arc prevention circuit is controlled by an ON and OFF signals originating from the controller and provided to the Master module using an M12 4-Pin connector. Refer to *Section 2.1.2—Arc Prevention Circuit* for additional information regarding the control of the arc prevention circuit.

The module also provides a signal to the controller indicating when the Master and Tool modules have fully coupled and that power can be turned ON. This Quick Connect signal also prompts the Ethernet/IP controller to start the internal delay timer. Refer to *Section 2.1.1—Ethernet/IP Quick Connect Signal* for additional details regarding the function of the Quick Connect signal.

1.1 DT2 Master Module

The Master module includes the following connections:

- (1) 4-pin female M12 Ethernet connector (E2)
- (1) 5-pin male M12 Ethernet/IP Timer Quick Connect connector (E1)
- (1) 4-pin male M12 arc prevention control connector
- (1) 4-pin male auxiliary power connector (4)

Refer to *Section 9—Drawings* for additional information and connector details.

1.2 DT2 Tool Module

The Tool module includes the following connections:

- (1) 4-pin female M12 Tool Ethernet connector
- (1) 4-pin female auxiliary power connector

Refer to *Section 9—Drawings* for additional information and connector details.

Figure 1.1—Modules

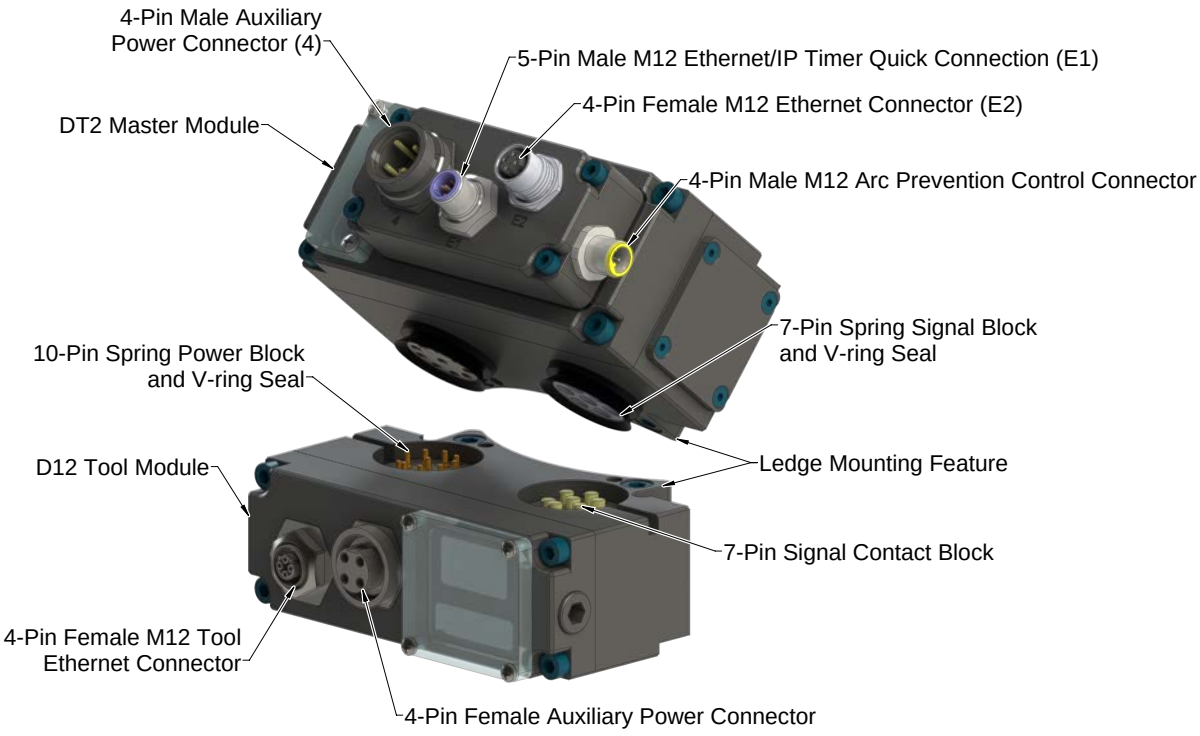

2. Product Information

The signal modules provide a pass-through capable module for Ethernet/IP Quick Connect applications and, by employing ATI's arc prevention circuit, a means to pass auxiliary power to end-of-arm devices. The module also provides the Ethernet/IP Quick Connect controller a signal indicating when to turn on power and start the delay timer. Refer to *Section 9—Drawings* for specific module wiring and connector interface information.

2.1 Master Module Information

The block diagram in *Figure 2.1* illustrates the basic functional features of the module:

Figure 2.1—Block Diagram of the DT2 Module

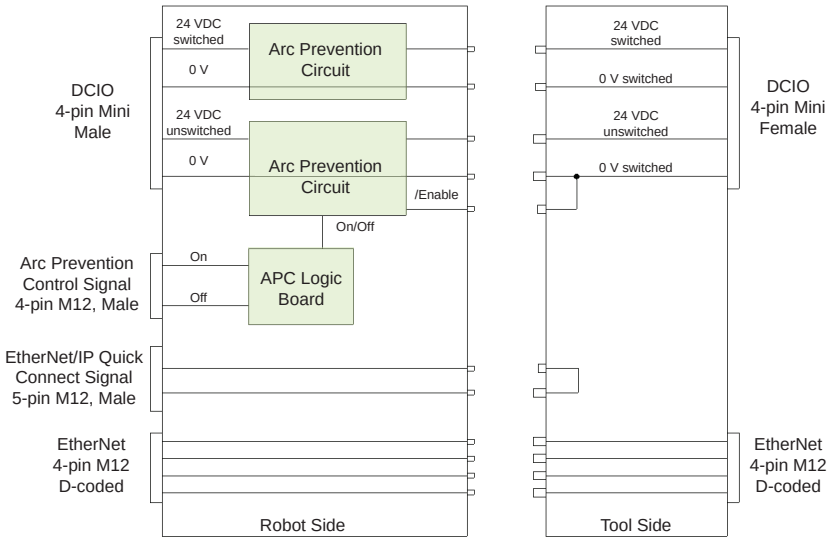

For a fully detailed electrical schematic of the module, see *Section 9—Drawings*, *Section 2.1.1—Ethernet/IP Quick Connect Signal,* and *Section 2.1.2—Arc Prevention Circuit*.

2.1.1 Ethernet/IP Quick Connect Signal

The purpose of the Ethernet/IP Quick Connect signal in the signal modules is twofold:

1. Provides a signal to the controller indicating that the Master and Tool modules have fully coupled and that power can be turned ON.
2. Provides a signal to the controller indicating to start the internal delay timer.

The 24 V Quick Connect signal, originating from the controller, is provided to Pin 1 of the M12 5-Pin Quick Connect connector on the Master (reference *Section 9—Drawings*). When the Master and Tool modules are fully coupled, the Quick Connect signal is routed to the Tool module over a recessed pin and then sent back to the controller via Pin 4 of the Quick Connect connector.

After receiving an active Quick Connect signal from the Master, the controller can send an ON signal to the arc prevention circuit to turn on auxiliary power to the end-of-arm devices. The controller can then also start the internal Ethernet/IP delay timer.

NOTICE: The time between the ON command being provided to the arc prevention circuit and power actually turning on is approximately 100 ms. The Ethernet/IP delay time may need to be adjusted to account for this power on delay.

2.1.2 Arc Prevention Circuit

The modules incorporate ATI's exclusive arc prevention circuit. The arc prevention circuit extends the life of all electrical power contacts by eliminating arcing caused by inductive loads and high inrush current during coupling/uncoupling.

In the discrete signal modules, the arc prevention circuit is controlled by ON and OFF signals provided by the controller. A M12 4-Pin connector on the Master module is used to interface with these ON and OFF signals. A recessed pin at the pin block interface is used to ensure that power cannot be turned on unless the electrical contacts are fully mated. Consequently, when the ON signal is active and the Master and Tool are fully coupled, the arc prevention circuit will turn on unswitched and switched auxiliary power.

A truth table listing the auxiliary power status for all possible ON and OFF signal states is shown in *Table 2.1*.

Table 2.1—Arc Prevention Truth Table

ON Input (Pin 2)	OFF Input (Pin 4)	Response
Low	Low	Remain in current state.
Low	High	Power off
High	Low	Power on
High	High	Power on

Notes:
1. When powering up, the power will be on and there will be a 500 ms delay before accepting input.

Before uncoupling the Utility Coupler it is recommended that the ON signal is made low and the OFF signal is made high. This will help ensure that power is turned off while the Utility Coupler is uncoupling, further reducing the probability of arcing between contacts.

NOTICE: The power ON signal should be made low and the OFF signal should be made high prior to uncoupling of the Utility Coupler in order to prevent arcing of the contact pins.

3. Installation

The modules are typically installed by ATI prior to shipment. The following steps outline the installation or removal. For wiring information refer to *Section 9—Drawings*.

WARNING: Do not perform maintenance or repair(s) on the Utility Coupler or modules unless all energized circuits (e.g. electrical, air, water, etc.) are turned off, pressurized connections are purged and power is discharged from circuits in accordance with the customer's safety practices and policies. Injury or equipment damage can occur with energized circuits on. Turn off and discharge all energized circuits, purge all pressurized connections, and verify all circuits are de-energized before performing maintenance or repair(s) on the Utility Coupler or modules.

CAUTION: Thread locker applied to fasteners must not be used more than once. Fasteners might become loose and cause equipment damage. Always apply new thread locker when reusing fasteners.

CAUTION: Ethernet cabling layout is critical to the overall performance of the system. Interface connections from the controller up the robot arm to the ATI Master should be minimized (less than 3 connections, e.g.). Use of hi-flex, robot rated cable is essential for long term performance.

3.1 Module Installation

Refer to *Figure 3.1*

Tools required: *5 mm Allen® wrench (hex key), torque wrench*

Supplies required: *clean rag, Loctite 242®*

1. Place the Tool in a secure location.
2. Clean the mounting surfaces.
3. Using the ledge feature, place the module into the appropriate location on the Utility Coupler. Align the module with the Utility Coupler using the dowels in the bottom of the ledge feature.
4. If fasteners do not have pre-applied adhesive, apply Loctite 242 to the supplied M6 socket head cap screws. Install the (2) M6 socket head cap screws securing the module to the Utility Coupler and tighten to 70 in-lbs (7.9 Nm).
5. Connect the cable connectors to the module.
6. After the procedure is complete, resume normal operation.

Figure 3.1—Module Installation

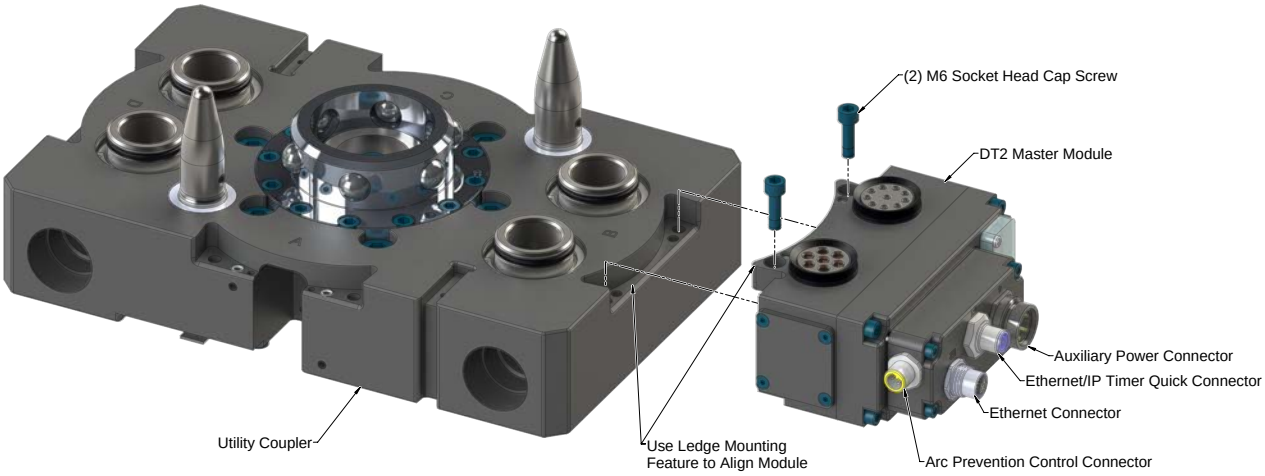

3.2 Module Removal

Tools required: *5 mm Allen wrench (hex key)*

1. Place the Tool in a secure location.
2. Uncouple the Master and Tool plates.
3. Turn off and de-energize all energized circuits (e.g. electrical, air, water, etc.).
4. Disconnect the cable connectors from the module.
5. Support the control/signal module and remove the (2) M6 socket head cap screws and remove the module.

3.3 Utility Schematic

Refer to *Section 9—Drawings* of this manual for customer interface and wiring details for the DT2M/DT2-T modules.

4. Operation

Refer to Utility Coupler manual.

5. Maintenance

The modules are not designed to be field serviced as all point-to-point wiring connections are soldered. Component replacement is limited to the V-ring seal on the Master.

WARNING: Do not perform maintenance or repair(s) on the Utility Coupler or modules unless all energized circuits (e.g. electrical, air, water, etc.) are turned off, pressurized connections are purged and power is discharged from circuits in accordance with the customer's safety practices and policies. Injury or equipment damage can occur with energized circuits on. Turn off and discharge all energized circuits, purge all pressurized connections, and verify all circuits are de-energized before performing maintenance or repair(s) on the Utility Coupler or modules.

If the Utility Coupler is used in dirty environments (e.g., welding or deburring applications), limit the exposure of the Utility Coupler. Idle Tool assemblies should be covered to prevent debris from settling on the mating surface. Also, the Master assembly should be exposed for only a short period of time during Tool change and down time.

Under normal conditions, no special maintenance is necessary; however, perform periodic inspections to assess for unexpected damage and assure long-lasting performance. Perform the following visual inspection monthly:

- Inspect mounting fasteners to verify they are tight and if loose, tighten to the torque. Refer to *Section 3—Installation*.
- Cable connections should be inspected during maintenance periods to ensure they are secure. Loose connections should be cleaned and re-tightened. Inspect cable sheathing for damage, repair or replace damaged cabling. Loose connections or damaged cabling are not expected and may indicate improper routing and/or strain relieving.
- Inspect the Master and Tool pin blocks for any pin damage, debris or darkened pins every 50,000 cycles or 6 months. Refer to *Section 5.1—Pin Block Inspection and Cleaning*.
- Inspect V-ring seals for wear, abrasion, and cuts every 6 months. If worn or damaged, replace. Refer to *Section 6.2.1—Seal Replacement*.

5.1 Pin Block Inspection and Cleaning

Tools required: *Nylon Brush (ATI part number 3690-0000064-60)*

1. Place the Tool in a secure location.
2. Uncouple the Master and Tool plates.
3. Turn off and de-energize all energized circuits (for example: electrical, pneumatic, and hydraulic circuits).
4. Inspect the Master and Tool pin blocks for debris or darkened pins.

Figure 5.1—Inspect Master and Tool Pin Blocks



5. If debris or darkened pins are present, use a vacuum to remove the debris, and clean using a nylon brush (ATI part number 3690-0000064-60).

NOTICE: Do not use an abrasive media and/or cleaners or solvents to clean the contact pins. Using abrasive media and/or cleaners or solvents will cause damage to the contact surface or cause pins to stick. Clean contact surfaces with a vacuum or non-abrasive media such as a nylon brush (ATI part number 3690-0000064-60).

Figure 5.2—Clean Pin Blocks with a Nylon Brush



6. Inspect the Master and Tool pin blocks for stuck pins or pin block damage.

Figure 5.3—Stuck Pin and Pin Block Damage

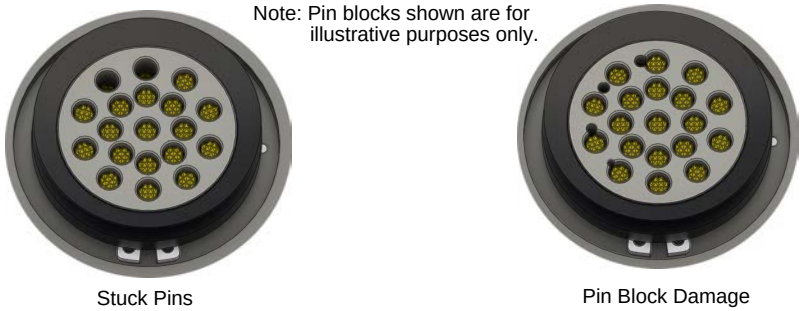

7. If pins become stuck or if there is damage to the pin block, contact ATI for either a possible pin replacement procedure or module replacement.
8. Safely resume normal operation.

6. Troubleshooting and Service Procedures

The following section provides troubleshooting information to help diagnose conditions with the Utility Coupler and service procedures to help resolve these conditions.

WARNING: Do not perform maintenance or repair(s) on the Utility Coupler or modules unless all energized circuits (e.g. electrical, air, water, etc.) are turned off, pressurized connections are purged and power is discharged from circuits in accordance with the customer's safety practices and policies. Injury or equipment damage can occur with energized circuits on. Turn off and discharge all energized circuits, purge all pressurized connections, and verify all circuits are de-energized before performing maintenance or repair(s) on the Utility Coupler or modules.

6.1 Troubleshooting

Refer to the following table for troubleshooting information.

Table 6.1—Troubleshooting

Symptom	Possible Cause	Correction
Loss of Communication.	Debris trapped between modules.	Remove debris, then re-attempt coupling.
	Module contact pin contamination.	Ensure that the spring pins on the Master side can move freely and are not bound by debris. Clean the spring pins to restore free operation. Clean Tool side module contacts, refer to *Section 5.1—Pin Block Inspection and Cleaning*. Inspect seal, replace if damaged. Refer to *Section 6.2.1—Seal Replacement.*
	Cable damage: Pinched, torn, or fatigued cables.	Examine cables for damage, perform a continuity test on cables and replace any bad cables.
No Power on the Tool side.	Debris trapped between modules.	Remove debris, then re-attempt coupling.
	Module contact pin contamination.	Ensure that the spring pins on the Master side can move freely and are not bound by debris. Clean the spring pins to restore free operation. Clean Tool side module contacts, refer to *Section 5.1—Pin Block Inspection and Cleaning*. Inspect seal, replace if damaged refer to *Section 6.2.1—Seal Replacement.*
	Utility Coupler not fully coupled.	Verify that the Master and Tool are fully coupled.
	Cable damage: Pinched, torn, or fatigued cables.	Examine cables for damage, perform a continuity test on cables and replace any bad cables.

6.2 Service Procedures

The following service procedures provide instructions for inspection, adjustment, test or replacement of components.

6.2.1 Seal Replacement

Parts required: *Refer to Section 9—Drawings*

The seal protects the electrical connection between the Master and Tool module. Replace the seal if it becomes worn or damaged.

1. Place the Tool in a secure location.
2. Uncouple the Master and Tool plates.
3. Turn off and de-energize all energized circuits (for example: electrical, pneumatic, and hydraulic circuits).
4. To remove the existing seal, pinch the edge of the seal and pull the seal away from the pin block on the Master module.
5. To install a new seal, stretch the new seal over the shoulder of the pin block.
6. Push the seal hub down against the pin block.
7. Safely resume normal operation.

Figure 6.1—V-ring Seal Replacement

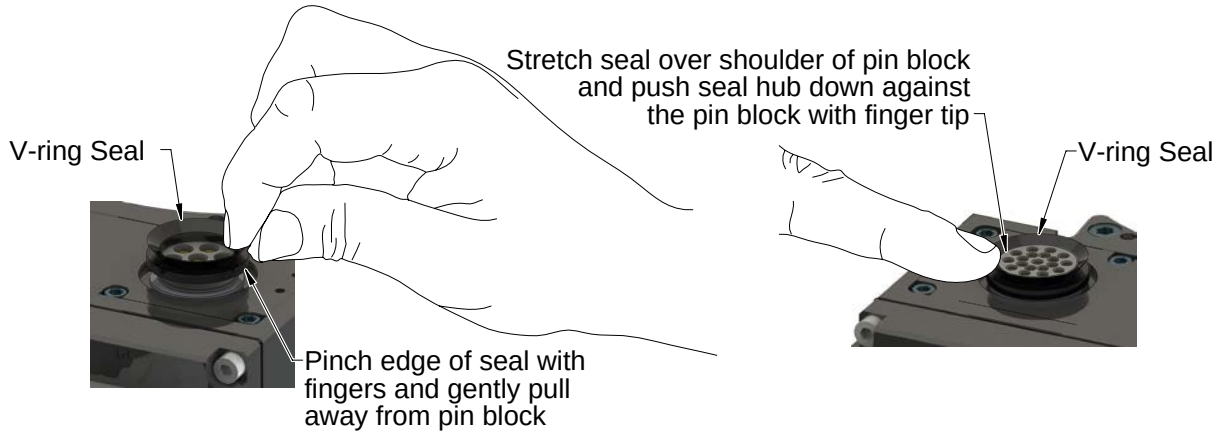

7. Serviceable Parts

7.1 Master Module Serviceable Parts

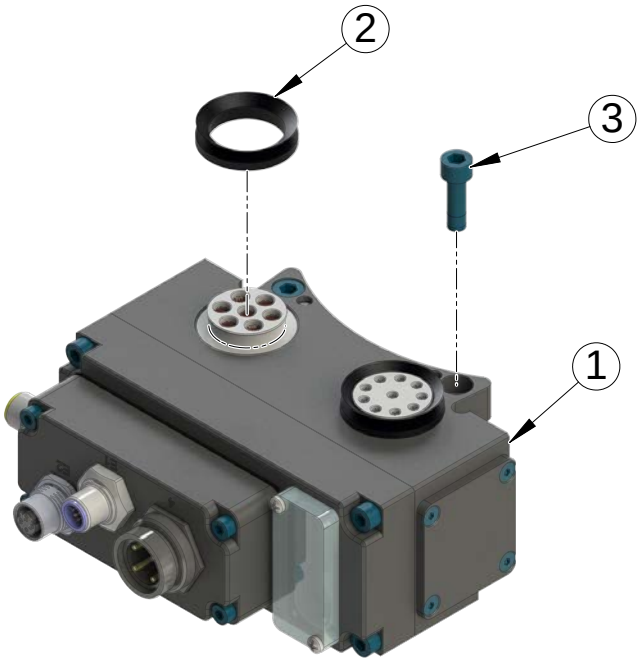

Table 7.1—Master Module			
Item No.	**Qty**	**Part Number**	**Description**
1	1	9121-DT2-M	DT2 Master Module Assembly
2	2	4010-0000030-01	V-ring Seal
3	2	3500-1066016-15A	M6-1 x 16mm Socket Head Cap Screw, Blue, Pre-Applied

7.2 Tool Module Serviceable Parts

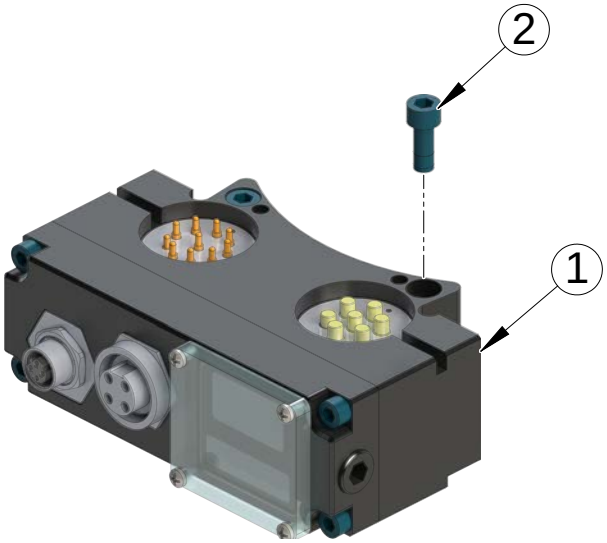

Table 7.2—Tool Module			
Item No.	**Qty**	**Part Number**	**Description**
1	1	9121-DT2-T	DT2 Tool Module Assembly
2	2	3500-1066020-15A	M6 x 20 mm socket head cap screws Blue Dyed Magni ND Microspheres

7.3 Accessories

Table 7.3—Accessories			
Item No.	**Qty**	**Part Number**	**Description**
*	*	3690-0000064-60	Brush, Blue Nylon All Purpose (Contact Pin Cleaning)

8. Specifications

Table 8.1—Master Module	
9121-DT2-M	EtherNet/IP Pass-Through Master module w/ Aux. Power Pass-Through for Utility Coupler Applications. M12 D-coded Female Connector for Ethernet communication, Mini 4-Pin Male Connector for Switched and Un-Switched Aux. Power circuits. Two (2) M12 4-Pin Connectors for Ethernet/IP Quick Connect Timer signal and Arc Prevention Control. Arc Prevention Circuit applied to Aux. Switched, Aux. Unswitched. Mates with 9121-DT2-T.
Connector(s)	Auxiliary Power: 4-pin male MiniFast Ethernet: 4-pin female M12 D-coded Timer: Quick Connect Signal: 5-pin male M12 Arc Prevention Control: 4-pin male M12
Power	8 A, 12-30 VDC
Signals	2 A, 60 V
Current Draw	Power: 180 mA @ 24 VDC, Master only (Unlocked sensor “ON”, Locked)
Temperature	32°F to 120°F (0 to 49°C).
Weight	1.5 lbs (0.68 kg)

Table 8.2—Tool Module	
9121-DT2-T	Ethernet/IP Pass-Through Tool module w/ Auxiliary Power Pass-Through for Utility Coupler Applications. M12 D-coded Female Connector for Ethernet communication, Mini 4-Pin Female Connector for Switched and Un-Switched Auxiliary Power circuits. Supports arc Prevention on the Master.
Connector(s)	Auxiliary Power: 4-pin female Mini Ethernet: 4-pin female M12 D-coded
Power	8 A, 12-30 VDC
Signals	2 A, 60 V
Temperature	32°F to 120°F (0 to 49°C).
Weight	1.45 lbs (0.66 kg)

9. Drawings

Drawings are available on the *ATI website* or by contacting an ATI representative.