Table of Contents

C. Control and Signal Modules C-2
VA2—Control Module C-2
1. Product Overview C-2
1.1 VA2 Master C-2
1.2 SA2 Tool C-3
1.3 SA3 Tool C-3
1.4 SA4 Tool C-3
1.5 SA5 Tool C-3
1.6 SA7 Tool C-3
1.7 Master Side TSI C-4
2. Installation C-5
2.1 Master Module Installation C-5
2.2 Master Module Removal C-7
2.3 Tool Module Installation C-7
2.4 Tool Module Removal C-8
2.5 Setting the Tool-ID on the SA3, SA4, SA5, and SA7 Tool Module C-9
3. Operation C-9
3.1 Lock, Unlock, and RTL Sensor Cable LED Behavior C-10
3.2 Recommended Sequence of Operations C-11
4. Maintenance C-13
4.1 Pin Block Inspection and Cleaning C-14
5. Troubleshooting and Service Procedures C-15
5.1 Troubleshooting C-15
5.2 Service Procedures C-17
5.2.1 Solenoid Valve Manual Override Procedure C-17
5.2.2 Seal Replacement C-18
6. Serviceable Parts C-18
6.1 Master and Tool Serviceable Parts C-18
6.2 Accessories C-18
7. Specifications C-19
8. Drawings C-21

C. Control and Signal Modules

VA2—Control Module

1. Product Overview

The Control modules are required to provide a means for the customer to communicate with and control the Tool Changer. MS-style connectors allow interfacing on the Master and Tool modules. When the Tool Changer is coupled, the Master and Tool modules communicate across their interface using a spring loaded pin block. A flexible boot surrounds the pin block to seal the connection from moisture and liquid while coupled. This seal is water resistant but not waterproof. Several module configurations are available to provide the customer with Tool Changer I/O and various pass-through signal capabilities. Refer to *Section 7—Specifications* for the details of each available module.

The Tool-ID feature allows the customer to distinguish between the different tools being coupled by the Tool Changer. The customer may set the Tool-ID by using push button switches on the Tool modules. Refer to *Section 2.5—Setting the Tool-ID on the SA3, SA4, SA5, and SA7 Tool Module*.



DANGER: This module has a voltage of 50V or greater; always remove power before contacting the module. Arcing and damage occur if power is not removed from the module during maintenance or service. Always remove power before attaching or disconnecting cables, separating or inserting the mating couplers, or making any contact with the Tool Changer or Utility Coupler.



CAUTION: Never couple or uncouple the unit without first disconnecting and discharging the power that passes through the contacts. This is especially true if high voltage circuits are involved. Arcing and contact damage will occur if this is not observed. Always disconnect and discharge electrical power from both upstream and downstream modules.

1.1 VA2 Master

The VA2 Master module provides up to 19 discrete pass through signals. The Master module uses (4) 3-pin Pico connectors to connect to the Lock, Unlock, and RTL sensors on the Tool Changer. The customer interface connection is an Amphenol 28-pin MS-style connector. The VA2 Master is compatible with the SA2, SA3, SA4, SA5, and SA7 Tool modules.

An electrical interface is provided on the VA2 Master module for support of an integrated single or double solenoid valve (DC Voltage). The integrated valve can be supplied from ATI as part of the valve adapter block, 9121-Jxx-M. Refer to the valve adapter block manual for more information. Electrical interface drawings and connector details are provided in the *Section 8—Drawings*.

The VA2 Master module is outfitted with a tool stand interlock (TSI) connector that is wired directly into the unlock solenoid valve circuit. Using this connector, a switch can be integrated that will allow the solenoid valve to uncouple the Tool Changer only when the Tool is in the tool stand. Otherwise, a teach plug is factory supplied with the connector to close the solenoid valve circuit.

Figure 1.1—VA2 Modules

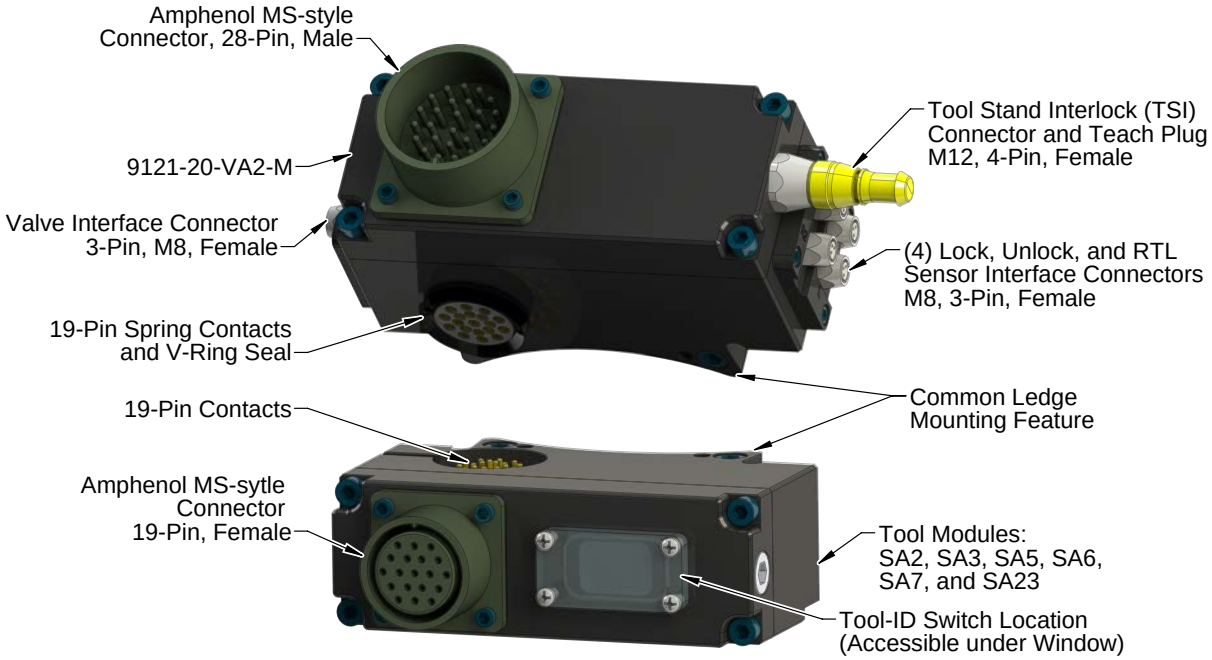

1.2 SA2 Tool

The SA2 Tool module provides up to 19 pass-through signals. The customer interface connection is an Amphenol 19-pin MS-style connector. There is no Tool-ID.

1.3 SA3 Tool

The SA3 Tool module provides up to 19 pass-through signals. The customer interface connection is an Amphenol 19-pin MS-style connector (10) unique Tool-ID values are available (0–9). The Tool-ID is tied into 24 VDC from Pin B, refer to the details in *Section 8—Drawings*.

1.4 SA4 Tool

The SA4 Tool module provides up to 19 pass-through signals. The customer interface connection is an Amphenol 19-pin MS-style connector (100) unique Tool-ID values are available (0–99). The Tool-ID is tied into 24 VDC from pin B, refer to the details in *Section 8—Drawings*.

1.5 SA5 Tool

The SA5 Tool module provides up to 19 pass-through signals. The customer interface connection is an Amphenol 19-pin MS-style connector (1000) unique Tool-ID values are available (0–999). The Tool-ID is tied into 24 VDC from pin B, refer to the details in *Section 8—Drawings*.

1.6 SA7 Tool

The SA7 Tool module provides up to 15 discrete pass-through signals. The customer interface connection is an Amphenol 19-pin MS-style connector (10) unique Tool-ID values are available (0–9). The Tool-ID is tied into 0 VDC from pin A, refer to the details in *Section 8—Drawings*.

1.7 Master Side TSI

To prevent an unintended Tool release, the electrical power to the unlatch valve circuit is switched ONLY when the Tool mounted limit switch indicates that the Tool is nested safely in the tool stand. The limit switch ensures that the Tool Changer Master releases the Tool in the tool stand (refer to *Figure 1.2*). If an Unlatch command is given and the Tool is not nested properly, the Unlatch command will not be recognized. This prevents accidental release of the Tool outside of the tool stand.

ATI recommends installation of a momentary action normally open, single-pole, single-throw mechanical limit switch to work with the TSI circuit. The limit switch must mount to the Master module in a manner that guarantees that the switch is closed only when the Tool is nested in the tool stand. The limit switch is connected to the VA2 Master module via a 4-pin M12 female connector.

A teach plug is available to override the TSI safety feature during initial setup and maintenance situations.

Figure 1.2—Tool Stand Interlock (TSI)

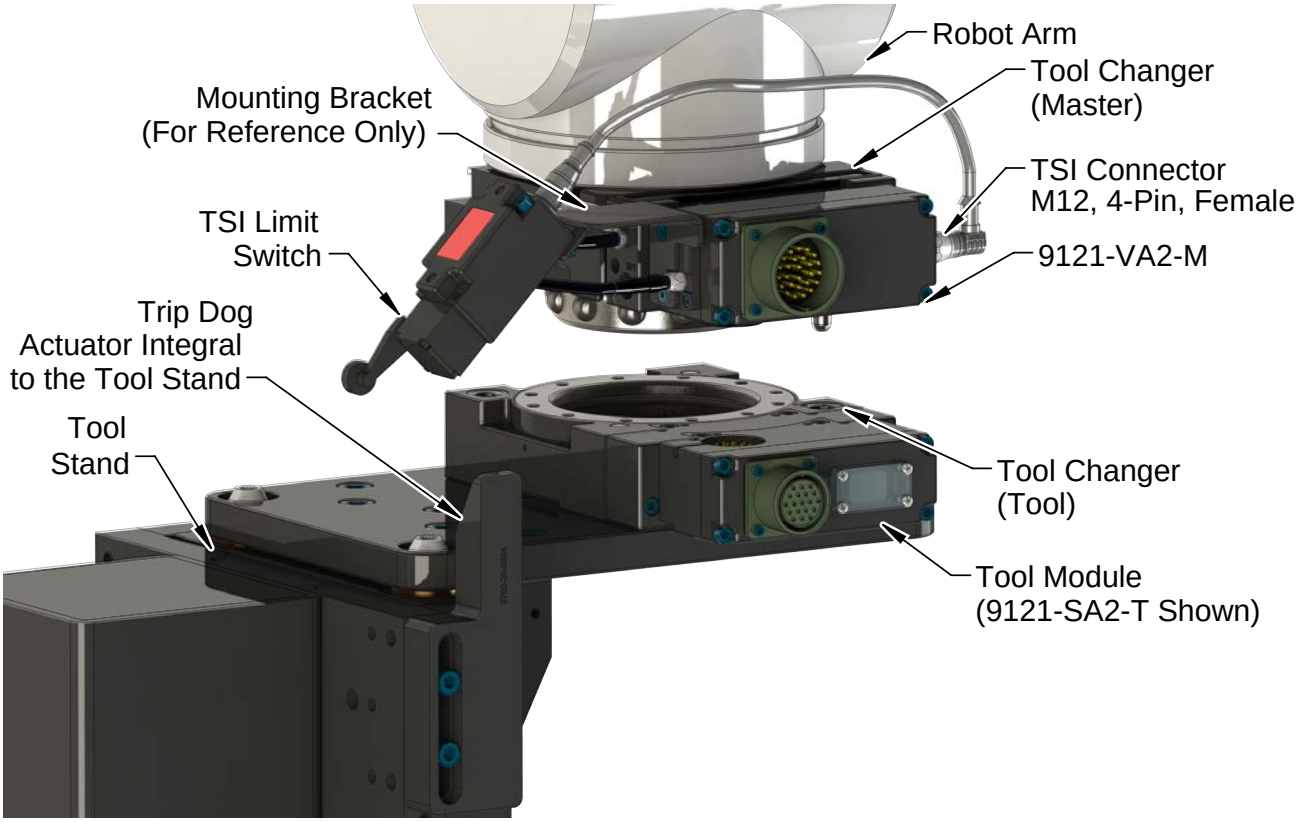

CAUTION: The Master locking mechanism must be fully retracted prior to the Master entering the Tool. Failure to do so will cause ball bearings to damage the Tool bearing race. If the Tool changer is locked, use solenoid valve manual override on the Tool Changer to unlock before attempting to latch the Master with the Tool. Refer to *Section 5.2.1—Solenoid Valve Manual Override Procedure*.

2. Installation

The control/signal modules are typically installed by ATI prior to shipment. The steps below outline the field installation or removal as required. For wiring information refer to *Section 8—Drawings*.

DANGER: This module has a voltage of 50V or greater; always remove power before contacting the module. Arcing and damage occur if power is not removed from the module during maintenance or service. Always remove power before attaching or disconnecting cables, separating or inserting the mating couplers, or making any contact with the Tool Changer or Utility Coupler.

WARNING: Do not perform maintenance or repair(s) on the Tool Changer or modules unless the Tool is safely supported or placed in the tool stand, all energized circuits (for example: electrical, air, water, etc.) are turned off, pressurized connections are purged and power is discharged from circuits in accordance with the customer specific safety practices and policies. Injury or equipment damage can occur with the Tool not placed and energized circuits on. Place the Tool in the tool stand, turn off and discharge all energized circuits, purge all pressurized connections, and verify all circuits are de-energized before performing maintenance or repair(s) on the Tool Changer or modules.

CAUTION: Thread locker applied to fasteners must not be used more than once. Fasteners might become loose and cause equipment damage. Always apply new thread locker when reusing fasteners.

2.1 Master Module Installation

Refer to *Figure 2.1* and *Figure 2.2* for Master module installation instructions.

Tools required: *5 mm hex key, torque wrench*

Supplies required: *Clean rag, Loctite® 242*

1. Place the Tool in a secure location.
2. Uncouple the Master and Tool plates.
3. Turn off and de-energize all energized circuits (for example: electrical, pneumatic, and hydraulic circuits).
4. Clean the mounting surfaces
5. Place the module into the appropriate location on the valve adapter.
6. Apply Loctite 242 to the supplied M6 socket head cap screws. Install the (2) M6 socket head cap screws securing the module to the valve adapter using a 5 mm hex key. Tighten to 70 in-lbs (7.9 Nm).
7. Ensure the Lock (L), Unlock (U), RTL (R1), and RTL (R2) connectors are clean and connect sensor cables to the control/signal module.
8. Ensure the valve connector is clean and connect the solenoid valve cable from the valve adapter to the valve connector on the control/signal module.
9. Ensure the TSI limit switch connector is clean and connect the cable to the control/signal module.
10. Ensure the power, signal, auxiliary, and other connectors are clean and connect cables to the module.
11. Safely resume normal operation.

Figure 2.1—Master Module Installation and Removal

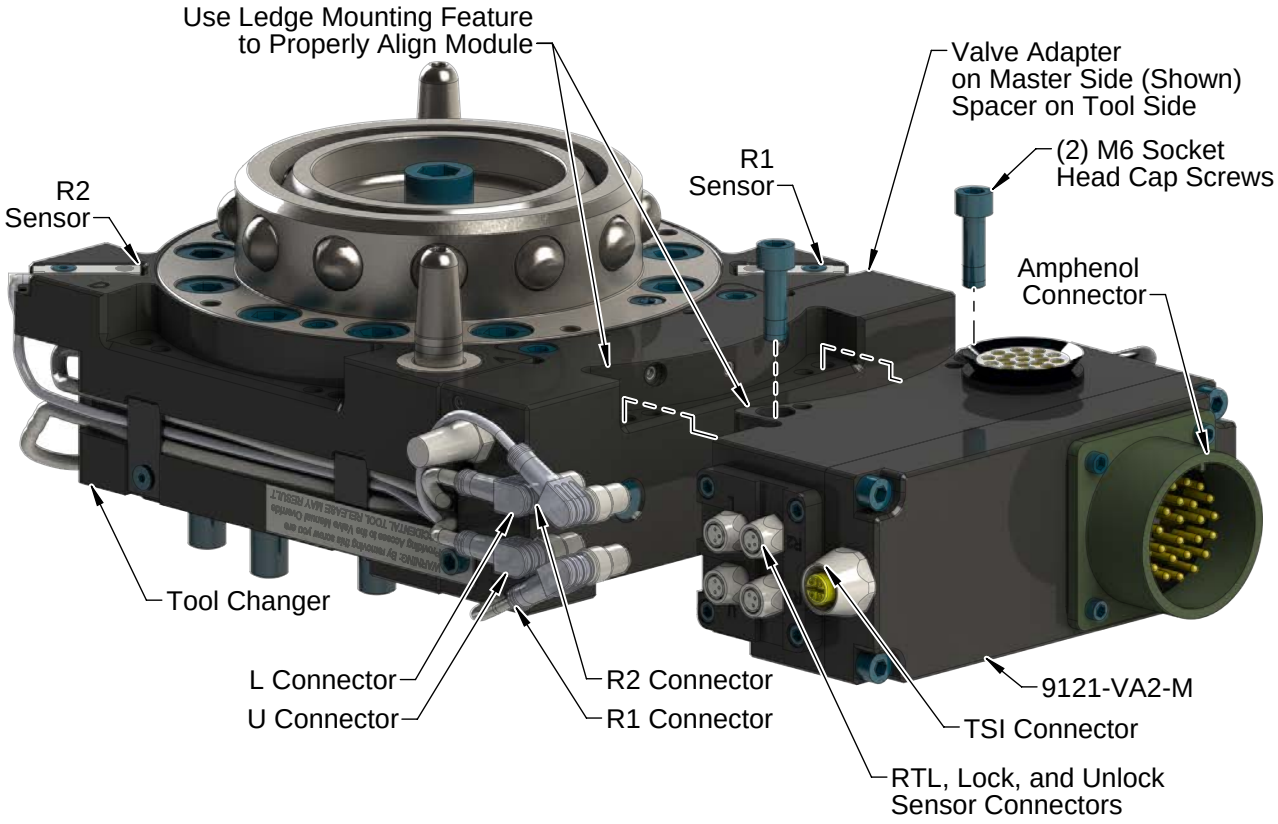

Figure 2.2—Module Installation and Removal (Valve Interface Connector)

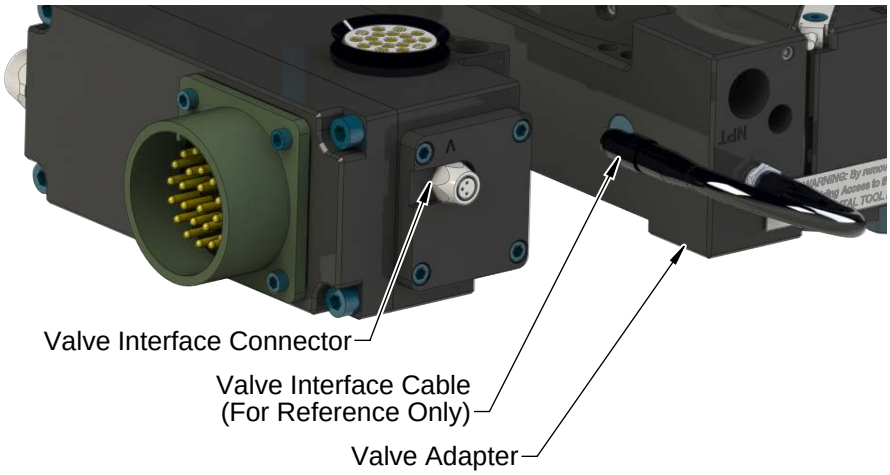

2.2 Master Module Removal

Refer to *Figure 2.1* and *Figure 2.2* for Master module removal instructions.

Tools required: *5 mm hex key*

1. Place the Tool in a secure location.
2. Uncouple the Master and Tool plates.
3. Turn off and de-energize all energized circuits (for example: electrical, pneumatic, and hydraulic circuits).
4. Mark the Lock, Unlock, and RTL sensor cables so that the cables can be reinstalled to the appropriate sensor.
5. Disconnect the Lock (L), Unlock (U), RTL (R1), and RTL (R2) sensor cable connectors from the module.
6. Disconnect the solenoid valve cable from the module.
7. Disconnect the TSI cable from the module.
8. Disconnect (for example: power, signal, auxiliary, etc.) cables from the control/signal module.
9. Support the control/signal module, remove the (2) M6 socket head cap screws using a 5 mm hex key, and lower the module until it clears the guide pin.

2.3 Tool Module Installation

Refer to *Figure 2.3* for Tool module installation instructions. Set the Tool-ID by using push button switches on the Tool modules. Refer to *Section 2.5—Setting the Tool-ID on the SA3, SA4, SA5, and SA7 Tool Module*.

Tools required: *5 mm hex key, torque wrench*

Supplies required: *Clean rag, Loctite 242*

1. Place the Tool in a secure location.
2. Uncouple the Master and Tool plates.
3. Turn off and de-energize all energized circuits (for example: electrical, pneumatic, and hydraulic circuits).
4. Wipe down the mounting surfaces with a clean rag.
5. Place the module onto the tool adapter.
6. Apply Loctite 242 to the supplied M6 socket head cap screws. Install the (2) M6 Socket Head Cap Screws and secure the module to the tool adapter using a 5 mm hex key. Tighten to 70 in-lbs (7.9 N-m).
7. Ensure the power, signal, auxiliary, and other connectors are clean and connect cables to the module.
8. Safely resume normal operation.

Figure 2.3—Tool Module Installation and Removal

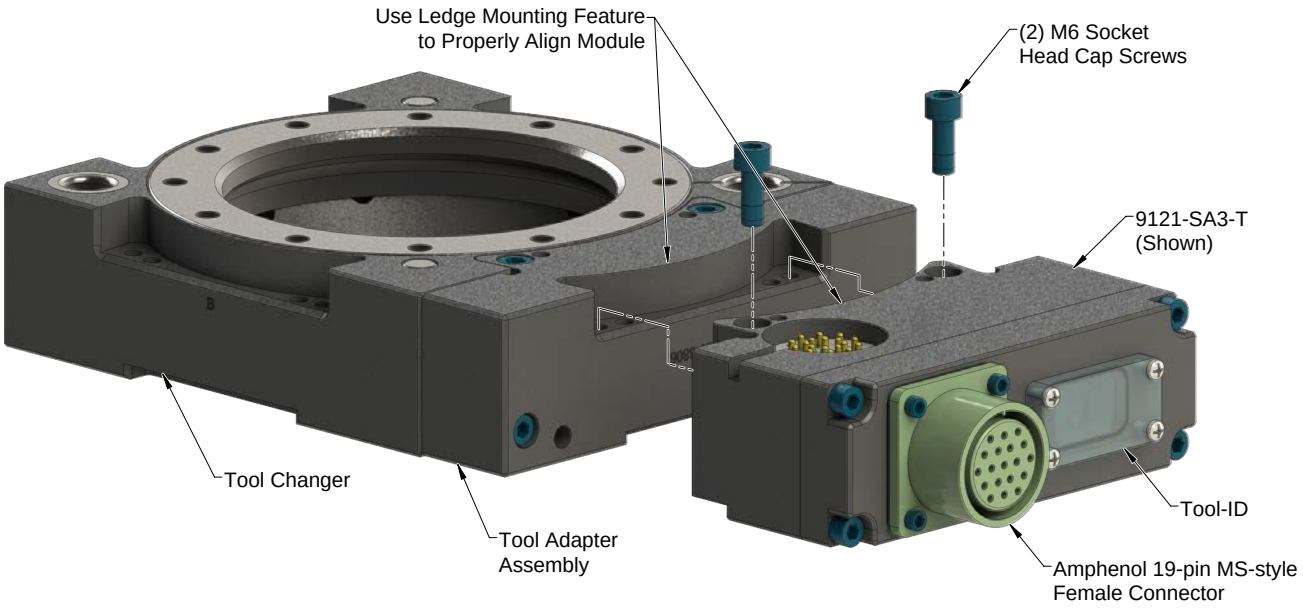

2.4 Tool Module Removal

Refer to *Figure 2.3* for Tool module removal instructions.

Tools required: *5 mm hex key*

1. Place the Tool in a secure location.
2. Uncouple the Master and Tool plates.
3. Turn off and de-energize all energized circuits (for example: electrical, pneumatic, and hydraulic circuits).
4. Disconnect (for example: power, signal, auxiliary, etc.) cables from the control/signal module.
5. Support the control/signal module, remove the (2) M6 socket head cap screws using a 5 mm hex key, and lift the module from the tool adapter.

2.5 Setting the Tool-ID on the SA3, SA4, SA5, and SA7 Tool Module

Push button switches are provided on the Tool module for setting of a unique digit Tool-ID number.

Tools Required: *Phillips screwdriver*

1. Loosen (4) M3 pan head captive screws and remove Tool-ID window.

Figure 3.1—Set Tool-ID

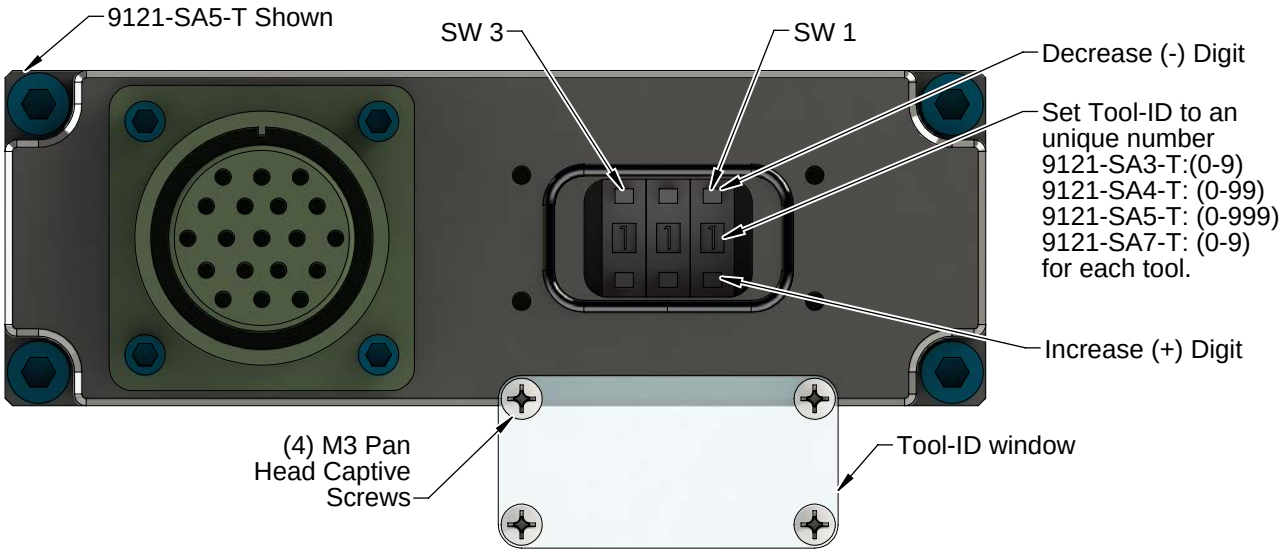

2. Use a non-conductive tool (e.g., plastic stylus) to press on the Tool-ID push buttons to increase (+) or decrease (-) the digit value. Set the Tool-ID to the desired unique digit number. Refer to *Section 8—Drawings* for Tool-ID output tables.
3. Re-install the Tool-ID window and tighten the (4) M3 pan head captive screws.

3. Operation

Various Tool Changer I/O are provided to the customer through the military-style Amphenol connector on the control/signal Master module. Lock, Unlock, and Ready-to-Lock proximity sensor inputs are provided for confirmation of the Tool Changer and locking mechanism positions. Other, customer assigned I/O points are available through the connector.

> The 0 and 24 VDC supply lines are required to be on certain pin locations of the customer interface connector. Refer to *Section 8—Drawings* for pin out information and location of the I/O signals.

Refer to the specific Tool Changer manual for coupling conditions of the Tool Changer as well as *Section 3.1—Lock, Unlock, and RTL Sensor Cable LED Behavior* and *Section 3.2—Recommended Sequence of Operations*. When coupled, the module Tool can be communicated with, Tool-ID can be read (if equipped), and attached end-effectors can be used.

3.1 Lock, Unlock, and RTL Sensor Cable LED Behavior

The Lock, Unlock, and RTL sensor cables are equipped with two LEDs. The Green LED indicates the sensor has power and the yellow LED indicates the switch has been made. The LED behavior is affected by the control/signal module.

Table 3.1—Sensor Cable LED Behavior for Common Tool Changer Positions

Tool Changer Position	Sensor cable LED Behavior			
Unlocked (Tool Changer Master plate free of stand with no Tool plate attached)	RTL (R1) Sensor	ON / OFF	ON / ON	Unlock (U) Sensor
	RTL (R2) Sensor	ON / OFF	ON / OFF	Lock (L) Sensor
Ready to Lock (Tool Changer Master plate with Tool plate parallel and at a distance of 1.22 mm or less from each other)	RTL (R1) Sensor	ON / ON	ON / ON	Unlock (U) Sensor
	RTL (R2) Sensor	ON / ON	ON / OFF	Lock (L) Sensor
Locked (Tool Changer Master plate with Tool plate attached in fully locked position)	RTL (R1) Sensor	ON / ON	ON / OFF	Unlock (U) Sensor
	RTL (R2) Sensor	ON / ON	ON / ON	Lock (L) Sensor
Missed Tool (Tool Changer Master plate locked with no Tool plate attached)	RTL (R1) Sensor	ON / OFF	ON / OFF	Unlock (U) Sensor
	RTL (R2) Sensor	ON / OFF	ON / OFF	Lock (L) Sensor

Figure 3.2—Lock, Unlock, and RTL Sensor cable LED Behavior (Shown in Locked Position)

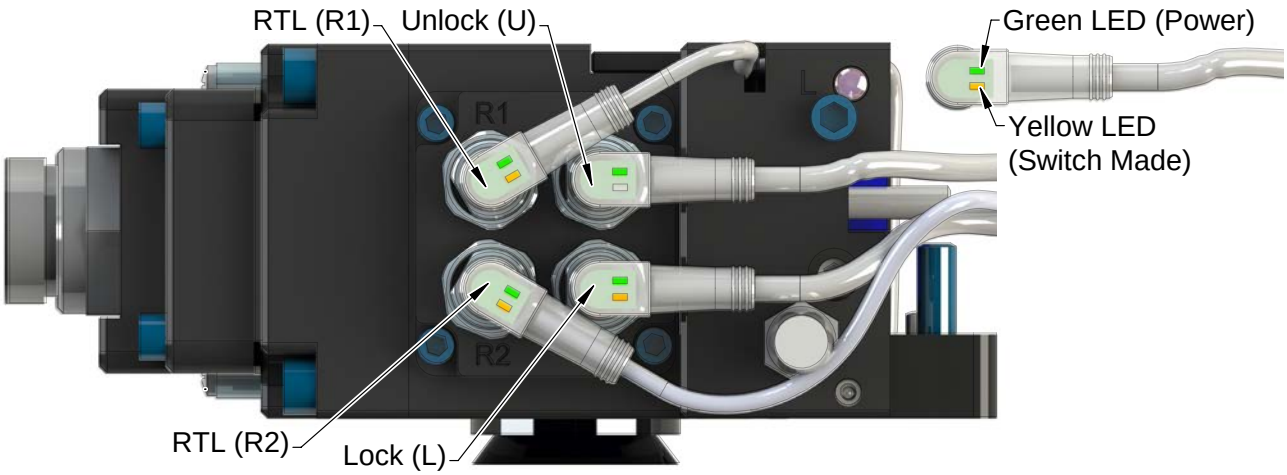

(Control module shown for reference only)

3.2 Recommended Sequence of Operations

This control/signal module supports both single and double solenoid valve adapters. The single solenoid valve is spring loaded to the locked position and only requires a Unlatch output signal to operate. The double solenoid valve requires a latch output signal to provide lock air to the Tool Changer and an unlatch output signal to provide unlock air to the Tool Changer. Refer to *Section 3.1—Lock, Unlock, and RTL Sensor Cable LED Behavior*.

This recommended sequence of operations procedure is a general guide when programming a robot or PLC for use with a Tool Changer and a control/signal module. This procedure is intended for "automatic" modes used during normal application processes.

1. Start→ The robot and Tool Changer Master are free of the stand or storage location, the Tool Changer is uncoupled and the Tool Changer locking mechanism may be fully retracted (unlocked condition). The Tool is by itself in the tool stand.
   a. The **RTL1** and **RTL2** inputs are OFF.
   b. The **Unlocked** input is ON.
   c. The ATI Tool and any downstream device(s) (Tool-ID) are offline.
   d. The **TSI** input is OFF.

NOTICE: For units with a single solenoid valve adapter the Unlatch output should be left ON between tool drop off and pick up. For units with a double solenoid valve the unlatch output can be pulsed since the solenoid will remain in the state last issued.

NOTICE: In the event that the Tool Changer is locked without a Tool or fully extended in a missed Tool condition, it must be unlocked using the manual override button on the valve, refer to *Section 5.2.1—Solenoid Valve Manual Override Procedure*.

2. Ensure the Master is Unlocked (The Master must be unlocked prior to entering the Tool to prevent the ball bearings from impinging on the Tool bearing race).
   a. The Unlatch output should be ON.
   b. The **Unlocked** input is ON and remains ON, indicating that the Tool Changer locking mechanism is fully retracted in the unlocked position.
3. Robot and Master moves parallel towards the Tool and are within 0.06" of the Tool (i.e., the module contact pins are touching, the **RTL** sensors have sensed the targets on the Tool).
   a. 'Input' power connections become available on the Tool.
   b. The **RTL1** and **RTL2** inputs are ON, indicating the Master may couple the with the Tool.
   c. Communications with downstream device(s) (Tool-ID) should now be established.
   d. The **TSI** input is ON.
4. Couple the Tool Changer.
   a. Turn the **Unlatch** output OFF. **Note:** For units with double solenoid valve adapters turn the **Latch** output ON.
   b. A pneumatic air source is sent to the "lock" port of the Tool Changer.
   c. The "unlock" port of the Tool Changer should be properly exhausted.
   d. The **Unlocked** input goes false a short time later, indicating piston travel. Subsequently, the **Locked** input goes true and remains true, indicating that the coupling operation is complete.
5. Robot moves away from the tool stand with the Tool Changer coupled.

6. Normal operation:
   a. The following inputs are ON:
      i. **Locked**
      ii. **RTL1**
      iii. **RTL2**
      iv. **Latch** (for units with double solenoid valves)
   b. The following inputs are OFF:
      i. **Unlocked**
      ii. **TSI**
   c. The following output commands are OFF:
      i. **Unlatch**
7. Robot moves into the tool stand with the Tool Changer coupled.
8. Uncouple the Tool Changer.

NOTICE: It is critical that the Tool be nested securely in the Tool Stand prior to Uncoupling the Tool Changer.

   a. The **TSI** input is ON. The TSI has to be ON before turning Latch OFF or Unlatch ON.
   b. **Note:** For units with double solenoid valve adapters turn the **Latch** output OFF. Turn the Unlatch output ON.
   c. A pneumatic air source is sent to the “unlock” port of the Tool Changer.
   d. The “lock” port of the Tool Changer should be properly exhausted.
   e. The **Locked** input goes false a short time later and subsequently the **Unlocked** input goes true and remains true, indicating that the uncoupling operation is complete.
9. Robot and Master move up and away and are at a distance greater than 0.125” from the Tool(the module contact pins are no longer touching).
   a. The **RTL1** and **RTL2** inputs goes OFF.
   b. The **TSI** input is OFF.
   c. ‘Input’ power connections become unavailable on the Tool.
   d. Communications with downstream device(s) (Tool-ID) should now be lost.
10. Robot and Master in free space.
   a. The following inputs are ON:
      i. **Unlocked**
   b. The following inputs are OFF:
      i. **Locked**
      ii. **RTL1**
      iii. **RTL2**
      iv. **TSI**

NOTICE: For units with a single solenoid valve adapter the Unlatch output must be left ON to keep the Tool Changer in an unlocked state since the single solenoid is spring loaded to the locked position. For units with a double solenoid valve the unlatch output can be pulse since the solenoid will remain in the state last issued.

4. Maintenance

The modules are not designed to be field serviced as all point-to-point wiring connections are soldered. Component replacement is limited to the V-ring seal on the Master.

DANGER: This module has a voltage of 50V or greater; always remove power before contacting the module. Arcing and damage occur if power is not removed from the module during maintenance or service. Always remove power before attaching or disconnecting cables, separating or inserting the mating couplers, or making any contact with the Tool Changer or Utility Coupler.

WARNING: Do not perform maintenance or repair(s) on the Tool Changer or modules unless the Tool is safely supported or placed in the tool stand, all energized circuits (for example: electrical, air, water, etc.) are turned off, pressurized connections are purged and power is discharged from circuits in accordance with the customer specific safety practices and policies. Injury or equipment damage can occur with the Tool not placed and energized circuits on. Place the Tool in the tool stand, turn off and discharge all energized circuits, purge all pressurized connections, and verify all circuits are de-energized before performing maintenance or repair(s) on the Tool Changer or modules.

If the Tool Changer is used in dirty environments (for example: welding or deburring applications), limit the exposure of the Tool Changer. Idle Tool assemblies should be covered to prevent debris from settling on the mating surface. Also, the Master assembly should be exposed for only a short period of time during Tool change and down time.

Under normal conditions, no special maintenance is necessary; however, perform periodic inspections to assess for unexpected damage and assure long-lasting performance. Perform the following visual inspection monthly:

- Inspect mounting fasteners to verify they are tight and if loose; then tighten to the proper torque. Refer to *Section 2—Installation*.
- Cable connections should be inspected during maintenance periods to ensure they are secure. Loose connections should be cleaned and re-tightened as appropriate. Inspect cable sheathing for damage, repair or replace damaged cabling. Loose connections or damaged cabling are not expected and may indicate improper routing and/or strain relieving.
- Inspect the Master and Tool pin blocks for any pin damage, debris or darkened pins. Refer to *Section 4.1—Pin Block Inspection and Cleaning*.
- Inspect V-ring seals for wear, abrasion, and cuts. If worn or damaged, replace. Refer *Section 5.2.2—Seal Replacement.*

4.1 Pin Block Inspection and Cleaning

Tools required: *Nylon Brush (ATI part number 3690-0000064-60)*

1. Place the Tool in a secure location.
2. Uncouple the Master and Tool plates.
3. Turn off and de-energize all energized circuits (for example: electrical, pneumatic, and hydraulic circuits).
4. Inspect the Master and Tool pin blocks for debris or darkened pins.

Figure 4.1—Inspect Master and Tool Pin Blocks



5. If debris or darkened pins are present, use a vacuum to remove the debris, and clean using a nylon brush (ATI part number 3690-0000064-60).

NOTICE: Do not use an abrasive media and/or cleaners or solvents to clean the contact pins. Using abrasive media and/or cleaners or solvents will cause damage to the contact surface or cause pins to stick. Clean contact surfaces with a vacuum or non-abrasive media such as a nylon brush (ATI part number 3690-0000064-60).

Figure 4.2—Clean Pin Blocks with a Nylon Brush



6. Inspect the Master and Tool pin blocks for stuck pins or pin block damage.

Figure 4.3—Stuck Pin and Pin Block Damage

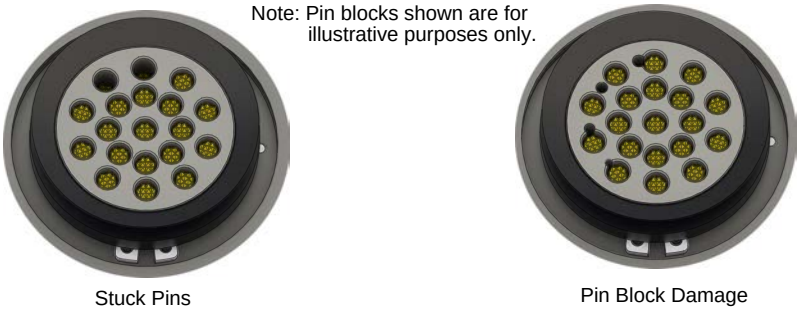

7. If pins become stuck or if there is damage to the pin block, contact ATI for either a possible pin replacement procedure or module replacement.
8. Safely resume normal operation.

5. Troubleshooting and Service Procedures

This troubleshooting section provides information to help diagnose conditions with the Tool Changer or control module.

DANGER: This module has a voltage of 50V or greater; always remove power before contacting the module. Arcing and damage occur if power is not removed from the module during maintenance or service. Always remove power before attaching or disconnecting cables, separating or inserting the mating couplers, or making any contact with the Tool Changer or Utility Coupler.

WARNING: Do not perform maintenance or repair(s) on the Tool Changer or modules unless the Tool is safely supported or placed in the tool stand, all energized circuits (for example: electrical, air, water, etc.) are turned off, pressurized connections are purged and power is discharged from circuits in accordance with the customer specific safety practices and policies. Injury or equipment damage can occur with the Tool not placed and energized circuits on. Place the Tool in the tool stand, turn off and discharge all energized circuits, purge all pressurized connections, and verify all circuits are de-energized before performing maintenance or repair(s) on the Tool Changer or modules.

5.1 Troubleshooting

Troubleshooting information is provided in the following table.

Table 5.1—Troubleshooting Procedures

Symptom	Possible Cause	Correction
Unit will not lock or unlock	Verify that ball bearings are moving freely. Clean and lubricate as needed.	Verify that ball bearings are moving freely. Clean and lubricate as needed. Refer to the Maintenance section of the Tool Changer manual for instructions.
	Air supply not to specifications.	Check air supply. Refer to the Installation section of the Tool Changer manual for specifications.
	Discrete signals are mapped incorrectly.	Verify that discrete signals are mapped and are communicating properly. Refer to *Section 8—Drawings* for electrical schematic.
	Master and Tool are within the specified No-Touch zone.	Verify that the Master and Tool are within the specified No-Touch zone when attempting to lock. *Refer to the Installation – tool stand Design Section of the Tool Change manual for specifications.*
Master plate is Locked without the Tool plate or in a missed Tool condition, and cannot be Unlocked using the Unlatch command.	The Latch command was sent to the Robot without the Tool plate coupled to the Master plate.	Refer to *Section 5.2.1—Solenoid Valve Manual Override Procedure*.
Sensors not operating properly	Sensor cables damage or incorrectly connected.	Verify that cables are connected correctly and not damaged, replace if damaged. Refer to the Troubleshooting Section of the Tool Change manual.
	Tool Plate is not secured properly or debris is trapped between surfaces.	Ensure that the Tool Plate is securely held to the Master Plate, that nothing is trapped between their surfaces.

Table 5.1—Troubleshooting Procedures		
Symptom	**Possible Cause**	**Correction**
Loss of Communication	Damaged signal cabling	Check/Replace signal cabling up- and down-stream of Tool Changer modules.
	Worn or damaged contact pins	Inspect module contact pins for debris/wear/ damage. Refer to *Section 4.1—Pin Block Inspection and Cleaning* . V-ring seal damaged and allowing debris in the contact pins. Replace V-ring seal, refer to *Section 5.2.2—Seal Replacement*.
	Product upstream and downstream of Tool Changer failed or damaged	Check product upstream and downstream of Tool Changer for failure. This failure can “appear” to be caused by the Tool Changer or affect Tool Changer performance.

5.2 Service Procedures

Component replacement and adjustment procedures are provided in the following section.

5.2.1 Solenoid Valve Manual Override Procedure

The manual override procedure should be used when the Tool Changer is locked without the Tool plate attached. The control module safety circuit does not allow the Tool Changer to be unlatched without the Tool plate attached and the tool in the tool stand.

WARNING: Do not use the solenoid valve manual override if the tool is locked to the Master. Using the manual override will release the Tool and may cause bodily injury or damage to equipment. If the Tool is attached to the Master, it must be secured in the tool stand or in a location where the tool weight is supported before using the manual override.

CAUTION: The manual override is not intended for normal operations. Manual override is to be used in situations where no alternative is available to unlock the Master. Do not execute the Latch command unless the Master and the Tool are ready to be coupled.

Tools required: *3 mm hex key, 2 mm ball end hex key*

1. Using a 3 mm hex key, remove the M4 socket head cap screws, warning label, and nylon washer from the Unlock side of the solenoid valve. The Unlock side is marked with a “U”.

CAUTION: Applying excess force can damage the solenoid or cause the override button to stick in one position. Actuation of valve override buttons requires about 1 mm of travel and minimal of force. Use a non-sharp object, similar to ball nose 2 mm hex key, to gently depress the override button; an air release should be heard when the solenoid is activated.

2. Insert a 2 mm ball end hex key in the unlock valve screw hole and gently depress the valve override button. An air release should be heard when the solenoid is actuated. Make sure the locking mechanism is fully retracted.
3. Using a 3 mm hex key, replace the M4 socket head cap screws, warning label, and nylon washer and tighten the screw.

Figure 5.1—Manual Override

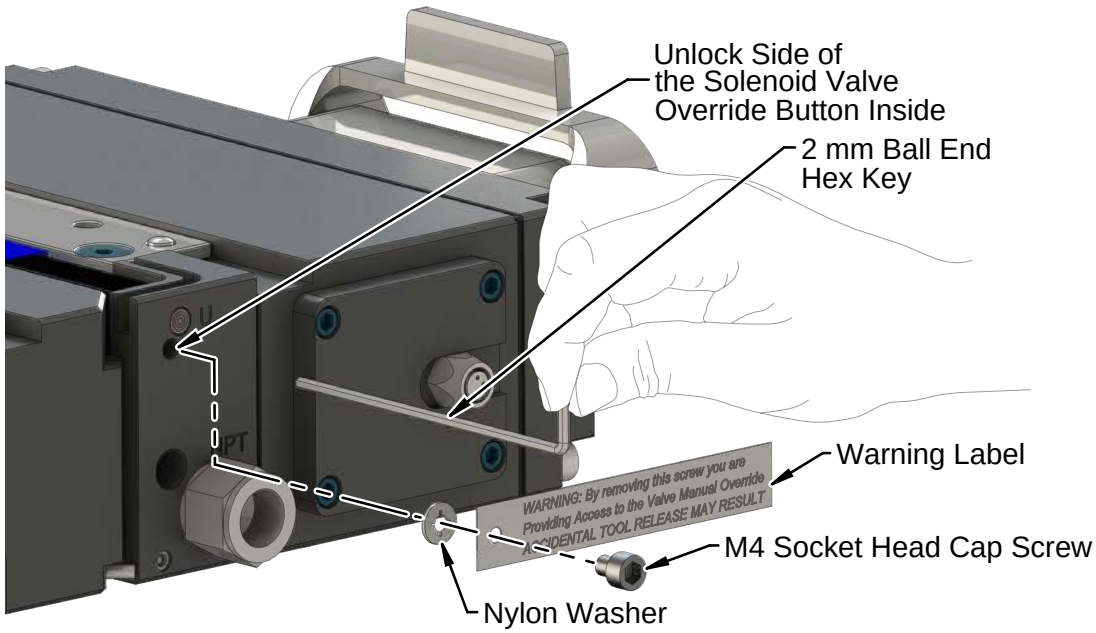

5.2.2 Seal Replacement

Parts Required: *Refer to Section 8—Drawings.*

The seal protects the electrical connection between the Master and Tool module. Replace the seal if it becomes worn or damaged.

1. Place the Tool in a secure location.
2. Uncouple the Master and Tool plates.
3. Turn off and de-energize all energized circuits (for example: electrical, pneumatic, and hydraulic circuits).
4. To remove the existing seal, pinch the edge of the seal and pull the seal away from the pin block on the Master module.
5. To install a new seal, stretch the new seal over the shoulder of the pin block.
6. Push the seal hub down against the pin block.
7. Safely resume normal operation.

Figure 5.2—V-ring Seal Replacement

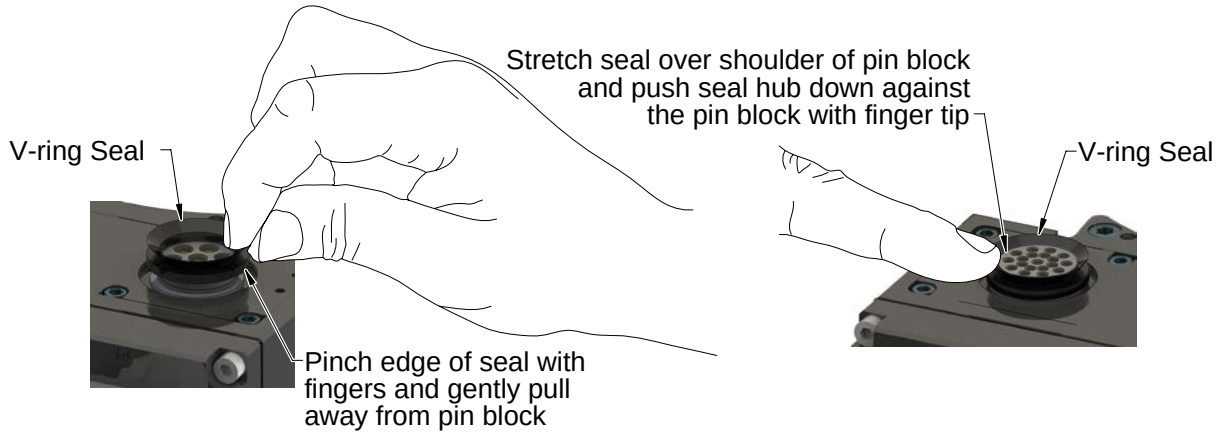

6. Serviceable Parts

6.1 Master and Tool Serviceable Parts

Refer to *Section 8—Drawings.*

6.2 Accessories

Table 6.1—Accessories

Item No.	Qty	Part Number	Description
*	*	3690-0000064-60	Brush, Blue Nylon All Purpose (Contact Pin Cleaning)

7. Specifications

Table 7.1—Master Module Specifications	
9121-VA2-M	Discrete Signal master module with 26-pin Amphenol, 19-pin Block, Supports L/U/R1/R2 Sensors (Uses Single or Double Solenoid Valve)
Interface Connections	19-pin female connector for Power and Signal **Integrated Tool Changer I/O:** (4) 3-pin M8 female connectors supporting Tool Changer Lock, Unlock, and Ready-to-Lock proximity sensors. 3-pin M8 female connector for valve interface with the valve adapter (Latch and Unlatch) 3-pin M12 female connector for TSI.
Electrical Rating	5 A, 250 V maximum **Tool Changer Control:** 24 VDC
Weight	1.5 lbs (0.7 kg)

Table 7.2—SA2 Tool Module Specifications	
9121-SA2-T	Discrete signal module with 19-pin Amphenol, 19-pin Block, 19 Pass-Through signals - Tool Side
Interface Connections	19-pin female connector for Power and Signal
Electrical Rating	5 A 250 V maximum
Weight	1.3 lbs (0.6 kg)

Table 7.3—SA3 Tool Module Specifications	
9121-SA3-T	Discrete Signal tool module with 19-pin Amphenol, 19-pin Block, 15 Pass-Through's, 0-9 Tool-ID
Interface Connections	19-pin female connector for Power and Signal
Electrical Rating	5 A 250 V maximum **Tool-ID:** 50 V and 100 mA
Tool-ID	10 Tool-ID Values Available (0-9), Factory Setting = 1
Weight	1.3 lbs (0.6 kg)

Table 7.4—SA4 Tool Module Specifications	
9121-SA4-T	Discrete Signal module with 19-pin Amphenol, 19-pin Block, 11 Pass-Through's, 0-99 Tool-ID - Tool Side
Interface Connections	19-pin female connector for Power and Signal
Electrical Rating	5 A 250 V maximum **Tool-ID:** 50 V and 100 mA
Tool-ID	100 Tool-ID Values Available (0-99), Factory Setting = 1
Weight	1.3 lbs (0.6 kg)

Table 7.5—SA7 Tool Module Specifications	
9121-SA7-T	Discrete Signal Tool module with 19-pin Amphenol, 19-pin Block, 15 Pass-Through's, 0-9 Tool-ID with 0VDC Ref
Interface Connections	19-pin female connector for Power and Signal
Electrical Rating	5 A 250 V maximum **Tool-ID:** 50 V and 100 mA
Tool-ID	10 Tool-ID Values Available (0-9), Factory Setting = 1
Weight	1.3 lbs (0.6 kg)

8. Drawings

Drawings are available on the *ATI website* or by contacting an ATI representative.