Table of Contents

D. Fluid Air Modules **D-2**
AV9—Vacuum Module **D-2**
1. Product Overview **D-2**
2. Installation **D-3**
2.1 Module Installation **D-3**
2.2 Module Removal **D-4**
3. Operation **D-5**
4. Maintenance **D-5**
4.1 Preventive Maintenance **D-5**
5. Troubleshooting and Service Procedures **D-6**
5.1 Troubleshooting **D-6**
5.2 Service Procedures **D-7**
5.2.1 V-ring Seal Replacement D-7
6. Serviceable Parts **D-8**
6.1 Master Module **D-8**
6.2 Tool Modules **D-8**
6.3 Accessories **D-8**
7. Specifications **D-9**
8. Drawings **D-10**

D. Fluid Air Modules

AV9—Vacuum Module

1. Product Overview

The AV9 modules provide pass-through vacuum ports when attached to the Master and Tool Plates. A 2” NPT vacuum connection is provided for the customer interface. The Master module is equipped with V-ring seals on the pass-through ports. The modules provide a J16 adapter arm that is equipped with two additional J16 paterns for mounting addition modules.

Figure 1.1—Vacuum Modules

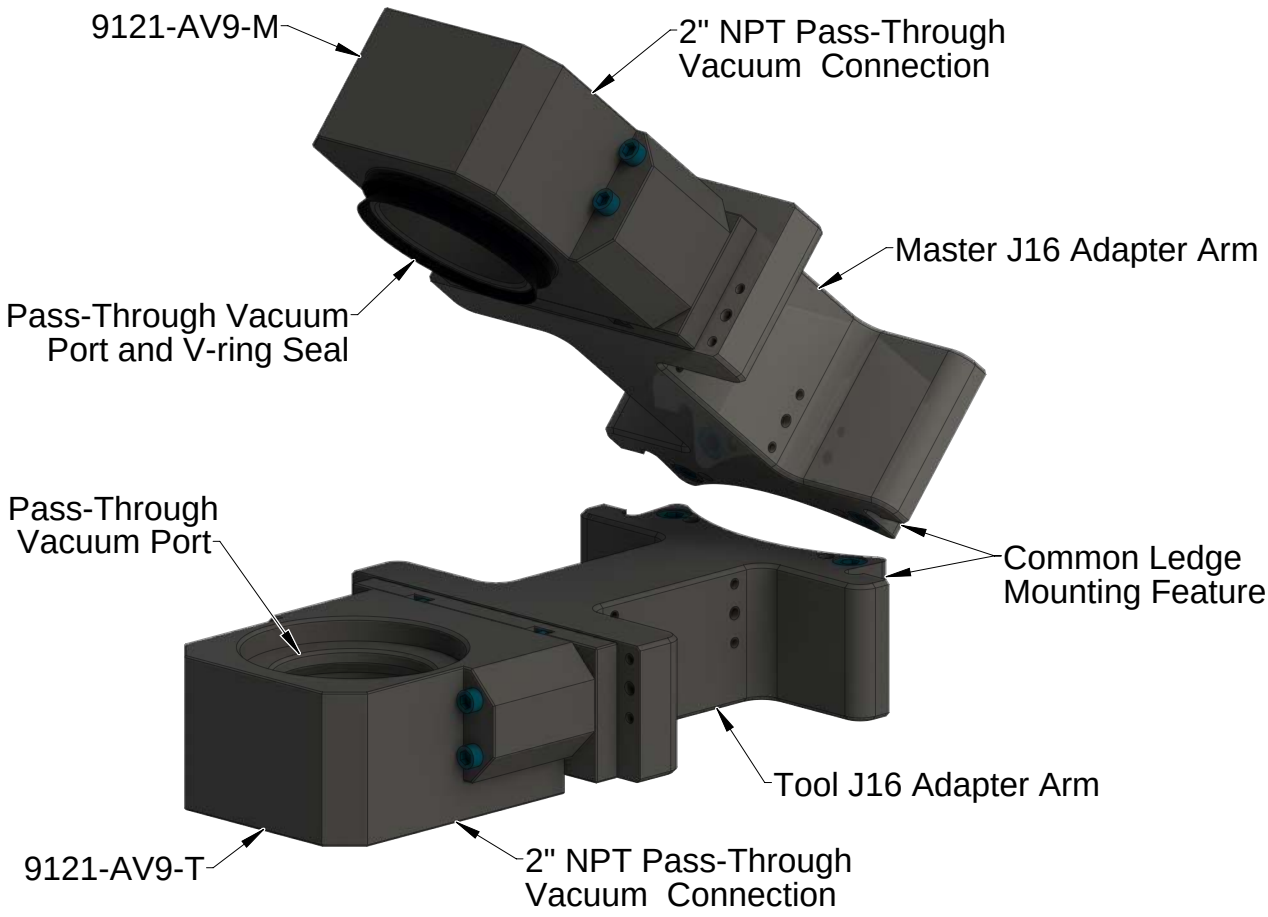

2. Installation

The vacuum modules are typically installed on Tool Changers or Utility Couplers by ATI prior to shipment. The steps below outline field installation or removal as required. For detail information refer to *Section 8—Drawings*.

WARNING: Do not perform maintenance or repair(s) on the Tool Changer or modules unless the Tool is safely supported or placed in the tool stand, all energized circuits (for example: electrical, air, water, etc.) are turned off, pressurized connections are purged and power is discharged from circuits in accordance with the customer specific safety practices and policies. Injury or equipment damage can occur with the Tool not placed and energized circuits on. Place the Tool in the tool stand, turn off and discharge all energized circuits, purge all pressurized connections, and verify all circuits are de-energized before performing maintenance or repair(s) on the Tool Changer or modules.

CAUTION: Thread locker applied to fasteners must not be used more than once. Fasteners might become loose and cause equipment damage. Always apply new thread locker when reusing fasteners.

2.1 Module Installation

Tools required: *5 mm hex key, torque wrench*

Supplies required: *clean rag, Loctite® 242*

1. Place the Tool in a secure location.
2. Uncouple the Master and Tool plates.
3. Turn off and de-energize all energized circuits (for example: electrical, pneumatic, and hydraulic circuits).
4. Wipe down the mounting surfaces with a clean rag.
5. Place the module into the appropriate location on the Tool Changer or Utility Coupler body. Align the module with the Tool Changer using the dowels in the bottom of the ledge feature.
6. Apply Loctite 242 to the supplied M6 socket head cap screws. Using a 5 mm hex key, install the (2) M6 socket head cap screws securing the module to the Tool Changer or Utility Coupler and tighten to 89 in-lbs (10.0 Nm).
7. Ensure the air connectors are clean and connect to the module.
8. Safely resume normal operation.

Figure 2.1—Installation and Removal of the Modules

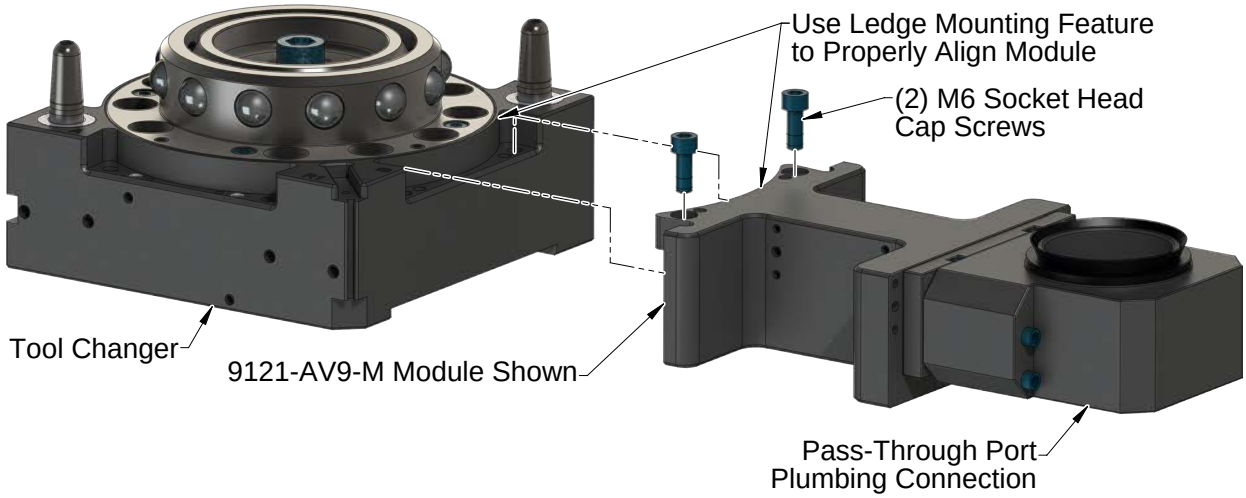

2.2 Module Removal

Tools required: *5 mm hex key*

Supplies required: *paint marker*

1. Place the Tool in a secure location.
2. Uncouple the Master and Tool plates.
3. Turn off and de-energize all energized circuits (for example: electrical, pneumatic, and hydraulic circuits).
4. Use a paint marker to indicate where the module is to be re-installed.
5. Disconnect air plumbing to the module.
6. Remove the (2) M6 socket head cap screws using a 5 mm hex key.
7. Remove the module.

3. Operation

The vacuum modules are designed to pass vacuum utilities from the Master to the Tool for use by the customer's tooling.

4. Maintenance

Once installation is completed, the operation of the vacuum modules is generally trouble free. Periodically, the condition of the V-ring seal should be checked. Replace any damaged or degraded components as necessary. Mating surfaces should be keep clean. Use a vacuum to remove any debris and clean in and around the mating surfaces of the modules using a nylon brush (ATI Part Number 3690-0000064-60). During inspection, ensure that the fasteners attaching the modules to the Tool Changer or Utility Coupler are secure.

WARNING: Do not perform maintenance or repair(s) on the Tool Changer or modules unless the Tool is safely supported or placed in the tool stand, all energized circuits (for example: electrical, air, water, etc.) are turned off, pressurized connections are purged and power is discharged from circuits in accordance with the customer specific safety practices and policies. Injury or equipment damage can occur with the Tool not placed and energized circuits on. Place the Tool in the tool stand, turn off and discharge all energized circuits, purge all pressurized connections, and verify all circuits are de-energized before performing maintenance or repair(s) on the Tool Changer or modules.

4.1 Preventive Maintenance

A visual inspection and preventive maintenance schedule is provided in *Table 4.1*.

Table 4.1—Preventive Maintenance Schedule

Inspection Schedule	Action Required
Weekly	Clean and inspect
6 months or 500,000 cycles	Seal replacement
Checklist	
Weekly Maintenance:	
☐ Clean mating surfaces.	
☐ Inspect modules for leaks. Replace components as necessary.	
6 months or 500,000 cycle Maintenance:	
☐ Inspect V-ring seals for wear, abrasion, and cuts. Refer to *Section 5.2.1—V-ring Seal Replacement*	
☐ Inspect the mounting fasteners for tightness, tighten if loose refer to *Section 2.1—Module Installation*.	

5. Troubleshooting and Service Procedures

The following section provides troubleshooting information to help diagnose conditions with the Tool Changer or Utility coupler and service procedures to help resolve these conditions.

WARNING: Do not perform maintenance or repair(s) on the Tool Changer or modules unless the Tool is safely supported or placed in the tool stand, all energized circuits (for example: electrical, air, water, etc.) are turned off, pressurized connections are purged and power is discharged from circuits in accordance with the customer specific safety practices and policies. Injury or equipment damage can occur with the Tool not placed and energized circuits on. Place the Tool in the tool stand, turn off and discharge all energized circuits, purge all pressurized connections, and verify all circuits are de-energized before performing maintenance or repair(s) on the Tool Changer or modules.

5.1 Troubleshooting

Refer to the table below for trouble shooting information.

Table 5.1—Troubleshooting

Symptom	Possible Cause	Correction
Poor Vacuum Flow	Vacuum lines or connections damaged or blocked	Inspect supply/return hoses and connections for damage or blockage, clean/repair/replace as necessary.
	Damaged V-ring Seal	Inspect V-ring seal and clean/repair as necessary. Refer to *Section 5.2.1—V-ring Seal Replacement.*
Modules Won't Couple	Debris between Master and Tool plates or modules.	Clean debris from between Master and Tool plates and modules.
	Loose Mounting Fasteners	Check module attachment to tool changer. Refer to *Section 2.1—Module Installation* for the proper torque.

5.2 Service Procedures

The following service procedures provide instructions for component replacement and adjustment.

5.2.1 V-ring Seal Replacement

Parts required: *Refer to Section 8—Drawings.*

The seal protects the electrical connection between the Master and Tool module. Replace the seal if it becomes worn or damaged.

1. Place the Tool in a secure location.
2. Uncouple the Master and Tool plates.
3. Turn off and de-energize all energized circuits (for example: electrical, pneumatic, and hydraulic circuits).
4. To remove the existing seal, pinch the edge of the seal and pull the seal away from the pin block on the Master module.
5. To install a new seal, stretch the new seal over the shoulder of the pin block.
6. Push the seal hub down against the pin block.
7. Safely resume normal operation.

Figure 5.1—V-ring Seal Replacement

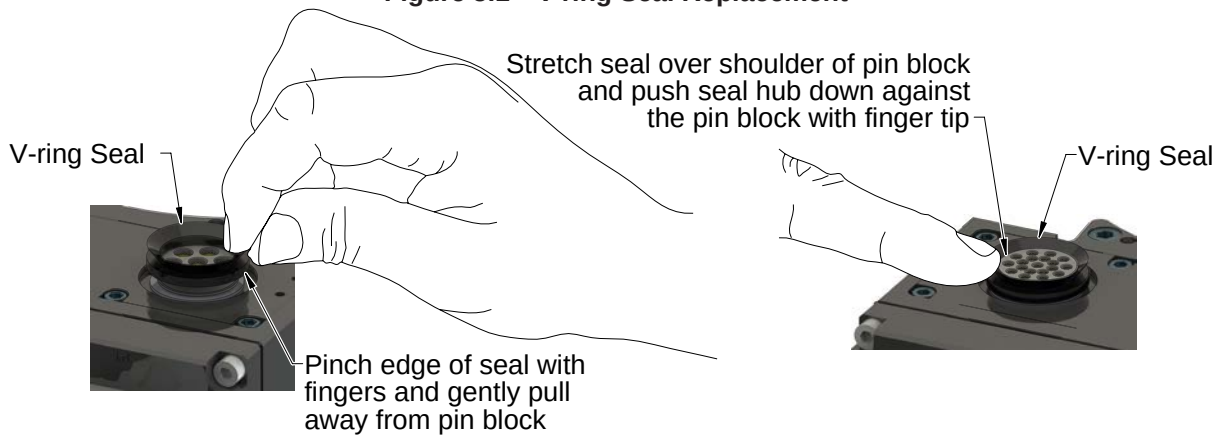

6. Serviceable Parts

6.1 Master Module

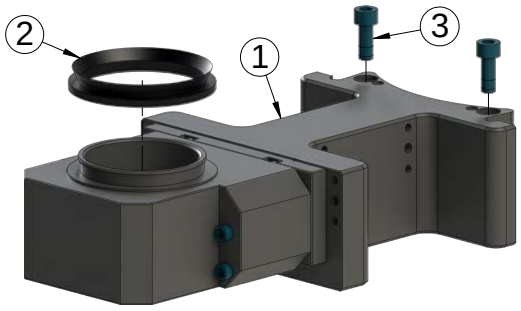

Table 6.1—AV2 Master Module			
Item No.	**Qty**	**Part Number**	**Description**
1	1	9121-AV9-M	Master module with Pass-Trhrough Vacuum Port 2” NPT Vacuum Port Connection
2	1	4010-0000057-01	V-Ring Seal, V-55
3	2	3500-1066016-15A	M6 x 16 mm socket head cap screws Blue Dyed Magni, ND Microspheres

6.2 Tool Modules

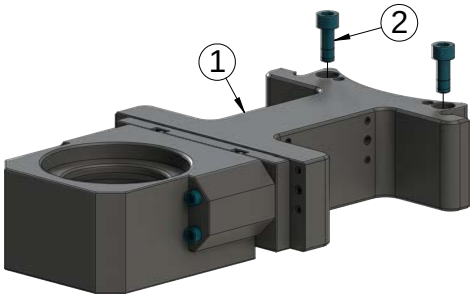

Table 6.2—Tool Modules			
Item No.	**Qty**	**Part Number**	**Description**
1	1	9121-AV9-T	Tool module module with Pass-Trhrough Vacuum Port 2” NPT Vacuum Port Connection
2	2	3500-1066016-15A	M6 x 16 mm socket head cap screws Blue Dyed Magni, ND Microspheres

6.3 Accessories

Table 6.3—Accessories			
Item No.	**Qty**	**Part Number**	**Description**
*	*	3690-0000064-60	Brush, Blue Nylon All Purpose

7. Specifications

Table 7.1—Master Module Specifications	
9121-AV9-M	Pneumatic Master module with Vacuum pass-through port, 1.5” O.D. flange mount port connections
Materials of Construction	Various - aluminum housing, Nitrile seal
Weight:	3.30 lbs. (1.50 kg)
Vacuum Ports:	
Quantity	1
Customer Port Connection	2” NPT

Table 7.2—Tool Module Specifications	
9121-AV9-T	Pneumatic Tool module with Vacuum pass-through ports, 1.5” O.D. flange mount port connections
Materials of Construction	Various - aluminum housing
Weight:	2.90 lbs. (1.2 kg)
Vacuum Ports:	
Quantity	1
Customer Port Connection	2” NPT

8. Drawings

Drawings are available on the *ATI website* or by contacting an ATI representative.