Table of Contents

D. Fluid (Hydraulic) Modules 2
F2Hx14x Family 2
1. Product Overview 2
2. Installation 4
   2.1 Installation 4
   2.2 Removal 4
3. Operation 4
4. Maintenance 5
5. Troubleshooting 7
6. Specifications 7
7. Drawings 8

D. Fluid (Hydraulic) Modules
F2Hx14x Family

1. Product Overview

The ATI F2Hx14x family of modules provides a method of attaching plate-mounted, 1/4 inch, high-pressure fluid couplers to ATI Tool Changers. The modules are designated as hydraulic fluid couplers, but other fluid types are possible (contact ATI for details as necessary). Each model is unique for its particular application, but they share various common features. Refer to the table and figures below for a description of the specific modules being presented in this section.

Specifications for each module will be listed on its customer drawing (see *Section 7—Drawings)*. Do not exceed the operating pressures or conditions listed on the product line customer drawing.

F2HG14A-M	(2) G1/4, 2300 PSI [160 Bar] MAX per Coupler
F2HG14A -T	*Maximum Total Pressure = 3000 PSI [207 Bar]*
F2HG14B-M	(2) G1/4, 3000 PSI [207 Bar] MAX per Coupler
F2HG14B -T	*Maximum Total Pressure = 3000 PSI [207 Bar]*
F2HN14A-M	(2) 1/4 NPT, 2300 PSI [160 Bar] MAX per Coupler
F2HN14A -T	*Maximum Total Pressure = 3000 PSI [207 Bar]*
F2HN14B-M	(2) 1/4 NPT, 3000 PSI [207 Bar] MAX per Coupler
F2HN14B -T	*Maximum Total Pressure = 3000 PSI [207 Bar]*
F2H14PC-T	Protective cover for tool side when no tool module is present.

Table 1.1 – Hydraulic Coupler Modules



WARNING: To protect the integrity of the module, do not exceed a combined pressure of 3000 psi (207 bar) on both ports. If pressure is exceeded, damage may occur to equipment and personnel.

NOTE:
Each coupler half is self-sealing.

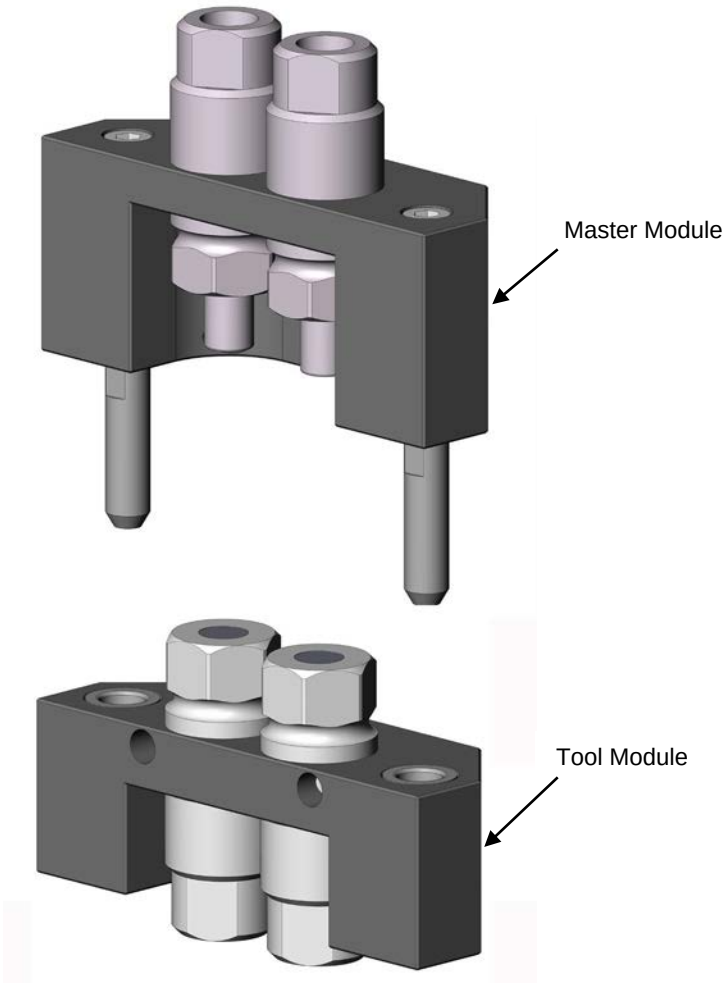

Figure 1.1—F2Hx14x Fluid Module (F2HN14B shown)

2. Installation

The modules are typically installed by ATI prior to shipment. The steps below outline field installation or removal as required.



WARNING: Do not perform maintenance or repair on Tool Changer or modules unless the tool is safely supported or docked in the tool stand and all energized circuits (e.g. electrical, air, water, etc.) have been turned off. Injury or equipment damage can occur with tool not docked and energized circuits on. Dock the tool safely in the tool stand and turn off all energized circuits before performing maintenance or repair on Tool Changer or modules.

2.1 Installation

1. Thoroughly clean the mounting surface on both the Tool Changer body and the fluid module housing.
2. Remove the hydraulic couplers from the assembly to access the mounting screws. (Refer to *Section 7—Drawings*.)
3. With the couplers removed, align the module's dowels with the corresponding holes in the pattern on the Tool Changer body.
4. Insert the dowels and tighten the M4 socket head caps screws. (Refer to the in *Section 7—Drawings* for the number of fasteners, thread locking materials, and torque requirements.)
5. With the module housing secured to the Tool Changer body, reinstall the coupler halves in the housing and tighten the front and rear coupler halves together. (See *Section7—Drawings* for the coupler torque requirements.)
6. After the couplers have been secured the hoses can be connect to the adapter sockets.

2.2 Removal

1. Discharge all hydraulic pressure prior to performing any work.
2. Disconnect all hoses and drain away trapped fluid.
3. Follow the installation steps (above) in reverse order to remove the modules from the Tool Changer.

3. Operation

The hydraulic modules are designed to pass fluid from the Master to the Tool for use by the customer's tooling.

The couplers utilize self-sealing components so that the fluid circuits do not discharge during tool change. The couplers are specified as flat-face, no-drip. However, there will be modest residual fluid on the surface of the couplers when uncoupling. The amount of this fluid will depend mainly upon the type of fluid being passed.

Due to the length of the coupler components, it will be necessary for the customer's equipment to drive the Master and Tool together. Minimizing trapped pressure in the fluid system will reduce the required force. The reaction/separation force produced by the pressure in the couplers may be calculated using the formulas on the customer drawings (see *Section 7—Drawings*).

It is important to read and understand the ATI's hydraulic plumbing schematic that explains proper plumbing techniques to avoid problems. A copy of this drawing is at the end of this document. An overview of the basic requirements is provided in the bullet list below. (NOTE: ATI does not sell hydraulic components or recommend a particular brand or type of accumulator. Please consult your hydraulic equipment supplier for guidance.)

In all liquid coupling applications, the customer is advised to take the following steps:

- Plumb the couplers using flexible hoses, which are able to absorb pressure spikes and pulses. Highly reinforced hoses and hard pipe must not be used.
- Turn off the supply pump or divert the fluid to the reservoir and discharge pressure in the lines prior to a tool change.
- Hydraulic pressure accumulators should be installed on both the Master and Tool side plumbing. This is particularly important on the Tool side, even with the pump turned off and Master side pressure discharged.
- During routine maintenance of the Tool Changer, the couplers should be inspected and re-lubricated. Water and most solvents will wash away lubricants necessary to prolong seal life.



CAUTION: Failure to follow these steps will result in premature seal failure, jetting of fluid from the couplers during tool changes, and significant pressure pulses in customer tooling.



CAUTION: To maximize the life and performance of fluid/air components, read and follow the steps in the Operations section of this manual.

4. Maintenance

The couplers consist of a front working part containing the valve and seal components and a rear portion with pipe threads. The front portion of the coupler may be unscrewed from the rear portion and removed without disturbing any plumbing or pipe fittings. This allows the customer to rapidly replace worn coupler parts minimizing lost production time. The torque required to secure the front and rear coupler halves to each other is listed on the drawings in *Section 7—Drawings.*

The operation of the fluid modules is generally trouble free if ATI's guidelines are adhered to. In hydraulic applications, the coupler seals are typically lubricated by the fluid. In circuits passing water, cleaning

agents or other chemicals it will be necessary to inspect and re-lubricate the seals more frequently. For non-hydraulic applications, the service interval must be determined by the customer as it will be unique to the fluid being passed. Minor re-lubrication may be carried out by draining the system and couplers, pushing the coupler valve components open using a small screwdriver, and injecting a small amount of air tool oil. More complete lubrication will require removal of the couplers, disassembling them to their discrete parts, and application of a basic NLGI-2 type grease to all the seals. An exploded maintenance drawing of the couplers is shown in *Section 7—Drawings*.

5. Troubleshooting

Problem	Cause	Remedy
Fluid Leakage	Damaged/Worn coupler or seals	Replace coupler.
Poor Flow	Flow path blockage	Inspect valve components and supply/return lines for blockage, clean/repair as necessary.
Modules Won't Couple	Misaligned modules, excess pressure	Examine and replace the pre-alignment pins as necessary. Discharge trapped pressure prior to coupling.

6. Specifications

Fluid Module	Weight	Coupler Materials	Fluid Ports, (qty) Size, Cv	Application Notes
9120-F2HN14A-M 9120-F2HN14A-T	1.56 lb (0.71 kg) 1.34 lb (0.61 kg)	Stainless Steel, Viton Seals	(2) 1/4 NPT, 0.46	2300 PSI MAX Pressure per Port 3000 PSI MAX Total Pressure
9120-F2HN14B-M 9120-F2HN14B-T	1.56 lb (0.71 kg) 1.34 lb (0.61 kg)	Stainless Steel, Viton Seals	(2) 1/4 NPT, 0.46	3000 PSI MAX Pressure per Port 3000 PSI MAX Total Pressure
9120-F2HG14A-M 9120-F2HG14A-T	1.56 lb (0.71 kg) 1.34 lb (0.61 kg)	Stainless Steel, Viton Seals	(2) G1/4 (BSPP), 0.46	2300 PSI MAX Pressure per Port 3000 PSI MAX Total Pressure
9120-F2HG14B-M 9120-F2HG14B-T	1.56 lb (0.71 kg) 1.34 lb (0.61 kg)	Stainless Steel, Viton Seals	(2) G1/4 (BSPP), 0.46	3000 PSI MAX Pressure per Port 3000 PSI MAX Total Pressure
9120-F2H14PC-T	0.75 lb (0.34 kg)	N/A	N/A	Protective cover for use when no tool module is present.

7. Drawings

Drawings are available on the ATI website or by contacting an ATI representative.