Table of Contents

F. High-Current Modules F-2
PH3—High-Current Module F-2
1. Product Overview F-2
2. Installation F-4
2.1 Cable Installation F-4
2.2 Cable Removal F-7
2.3 Module Installation F-7
2.4 Module Removal F-7
3. Operation F-8
4. Maintenance F-9
5. Troubleshooting and Service Procedures F-10
5.1 Troubleshooting F-10
5.1.1 Troubleshooting Sequence F-11
5.2 Service Procedures F-12
5.2.1 Master Module Contact Tip Replacement F-12
5.2.2 Tool Module Contact Tip Replacement F-13
5.2.3 Module Contact Base Replacement F-14
5.2.4 Tubular Seal Replacement F-16
6. Serviceable Parts F-16
7. Specifications F-17
8. Drawings F-18

F. High-Current Modules

PH3—High-Current Module

1. Product Overview

High-current modules are designed to carry high-current from a power supply to customer tooling. The module can accept #2 through #4 AWG cables. They consist of (3) plated copper contacts, each capable of carrying 600 Amps when coupled. The voltage should not exceed 800 Volts. Power must be off when coupling and uncoupling. In addition, the installation of over-current protection in the primary power supply circuit is recommended.

DANGER: This module has a voltage of 50V or greater; always remove power before contacting the module. Arcing and damage occur if power is not removed from the module during maintenance or service. Always remove power before attaching or disconnecting cables, separating or inserting the mating couplers, or making any contact with the Tool Changer or Utility Coupler.

CAUTION: To avoid damage to the contacts, never uncouple the unit without first disconnecting and discharging the power that passes through these pins. This is especially true when using high voltage circuits.

The high-current modules use advanced, patented, cone-mating technology to transfer current from the Master to the Tool. The mating conical surfaces provide a large contact area, excellent alignment capability, and enable efficient coupling/uncoupling without high spring forces or excessive wear. If required, the contact tips on either the Master or Tool can be replaced without removing the wiring.

The contact tips on the Master side are recessed below the surface and contain a central insulated post. The modules were designed such that the average human adult cannot touch the metallic parts. The center contact is designed to engage first and break last and is intended for use as a ground contact.

The high current Tool module provides compliant motion in the power contacts, ATI requires the use of high-flex type with fine stranding cables and proper strain relief to allow for motion.

Figure 1.1—PH3 Modules

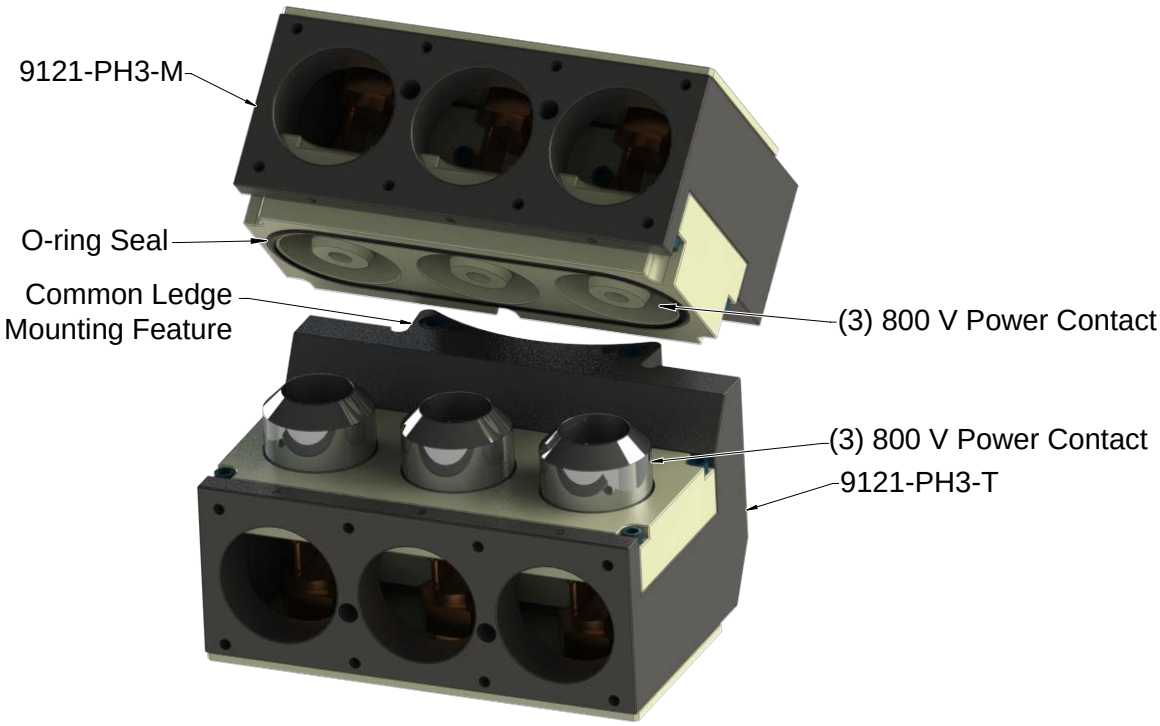

When a PH3-T module is not used on the Tool side, a PAA-T may be supplied (per customer request) to protect the Master side power module from dust, debris, and weld spatter.

Figure 1.2—Protective Cover for Tool Side (PHA-T)



A fitting plate is required to support a customer supplied strain relief fitting to grip the customer supplied cables.

Figure 1.3—Fitting Plate



2. Installation

The PH3 modules have (3) high-current electrical contacts. A fitting plate may be specified at the time of the order to support a customer-supplied strain relief fitting. Once the fitting plate is installed on the modules, the prepared cable ends are fed through the strain relief and into the modules where the conductors are attached to the contact bases. The center contact is designed to engage first and break last; it is intended for use as a ground contact. For ease of cable installation, it is recommended that the modules be removed from the Tool Changer or Utility Coupler.

The high-current modules are typically installed by ATI prior to shipment. Installation and removal are outlined in the following section. These steps also detail connecting cables to the contacts.

DANGER: This module has a voltage of 50V or greater; always remove power before contacting the module. Arcing and damage occur if power is not removed from the module during maintenance or service. Always remove power before attaching or disconnecting cables, separating or inserting the mating couplers, or making any contact with the Tool Changer or Utility Coupler.

WARNING: Do not perform maintenance or repair(s) on the Tool Changer or modules unless the Tool is safely supported or placed in the tool stand, all energized circuits (for example: electrical, air, water, etc.) are turned off, pressurized connections are purged and power is discharged from circuits in accordance with the customer specific safety practices and policies. Injury or equipment damage can occur with the Tool not placed and energized circuits on. Place the Tool in the tool stand, turn off and discharge all energized circuits, purge all pressurized connections, and verify all circuits are de-energized before performing maintenance or repair(s) on the Tool Changer or modules.

CAUTION: Do not use stiff, heavy stranded cables which can inhibit operation of the high current module. Stiff cables can prevent compliant motion of the contacts and cause an intermittent or improper power connection. Operation of the high current module requires the customer supplied cables to be high-flex type with fine stranding and sufficient strain relief to allow free cable motion.

CAUTION: Thread locker applied to fasteners must not be used more than once. Fasteners might become loose and cause equipment damage. Always apply new thread locker when reusing fasteners.

2.1 Cable Installation

Refer to *Figure 2.1*.

Tools required: *2 mm hex key, 1-1/8” socket, ratchet wrench, torque wrench, wire stripper*

1. If already installed on the Tool Changer or Utility Coupler, remove the module. Refer to *Section 2.4—Module Removal.*
2. To access the inside of the housings, remove the (8) M3 socket flat head cap screws that secure the housing cover to the module using a 2 mm hex key and remove the housing cover.
3. Remove the (3) split-bolt cable clamps using a 1-1/8” socket wrench.

Figure 2.1—Remove the Module Fitting Plates and Cover (Master Module Shown)

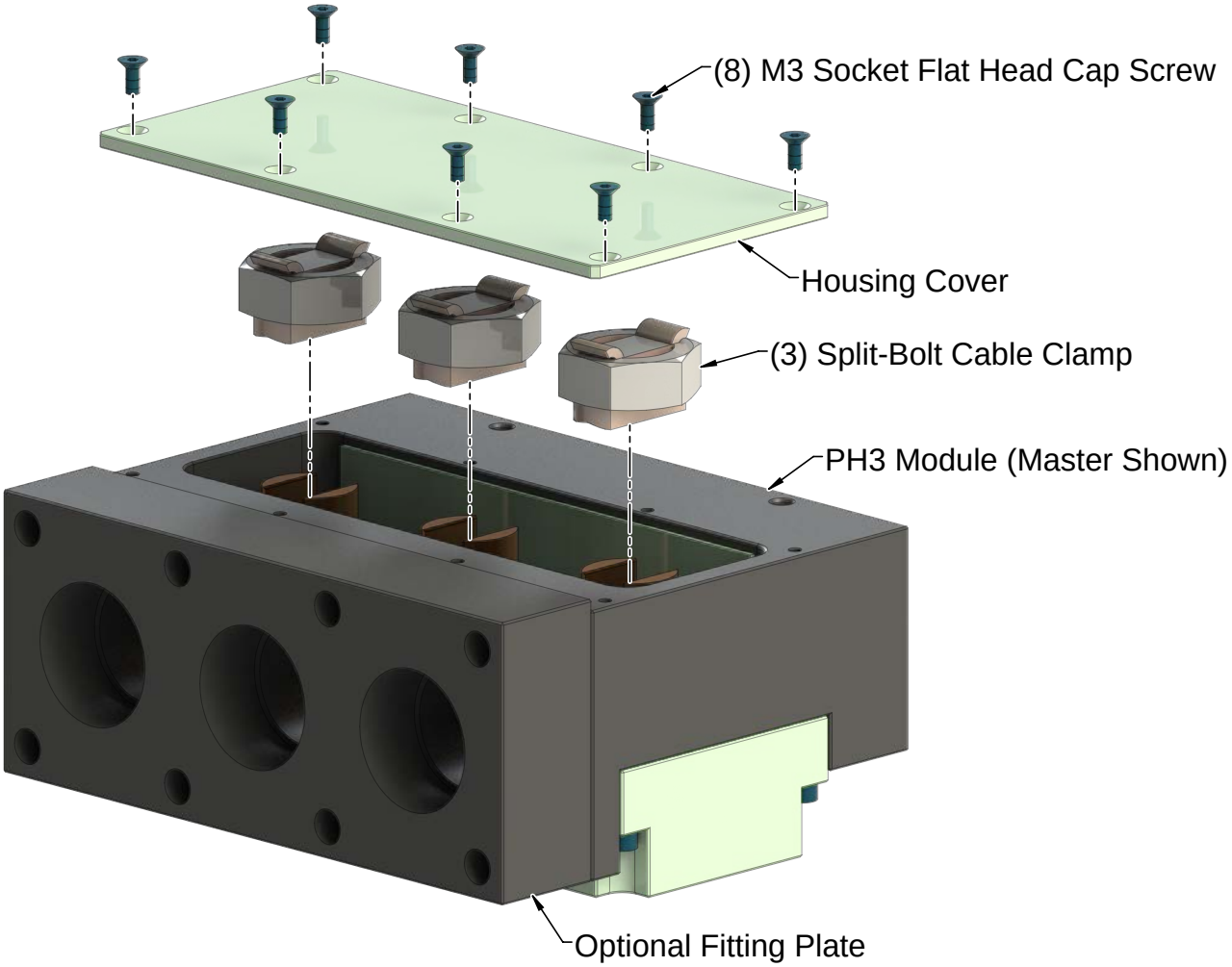

CAUTION: Use of stiff heavy stranded cables can cause improper operation of the high current module. The use of stiff cables can prevent compliant motion of the contacts and cause an intermittent or improper power connection. For proper operation, ATI requires the customer supplied cables be of the high-flex type with fine stranding and proper strain relief to allow for a minimum of 4 mm free cable motion as specified in *Section 8—Drawings*.

4. Feed the cable(s) through the customer supplied strain relief fitting(s) and prepare the cable ends by stripping the insulation back approximately 1-3/4" (44.5 mm). Be careful not to cut individual strands while stripping the cable insulation.

Figure 2.2—Wire Stripping

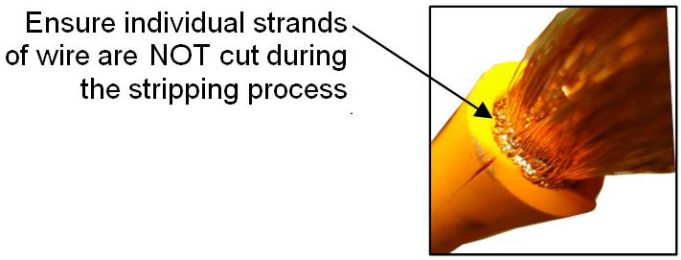

5. Apply 5/8” (16 mm) of the heat shrink tubing where the conductor exits the jacket.
6. Insert each prepared cable end into the appropriate contact base and replace the split-bolt cable clamp. Make sure that no loose wire filaments are protruding from the contact bases. Also, ensure the cable clamps are not clamped on the cable insulation and the entire clamp is contacting the copper wire. Tighten to 110 in-lbs (12.4 Nm) using a 1-1/8” socket wrench.

Figure 2.3—Clamping

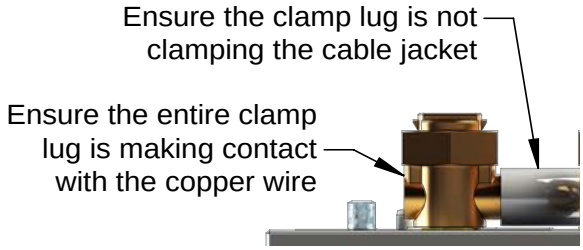

Figure 2.4—Install the Customer Supplied Cables (Master Module Shown)

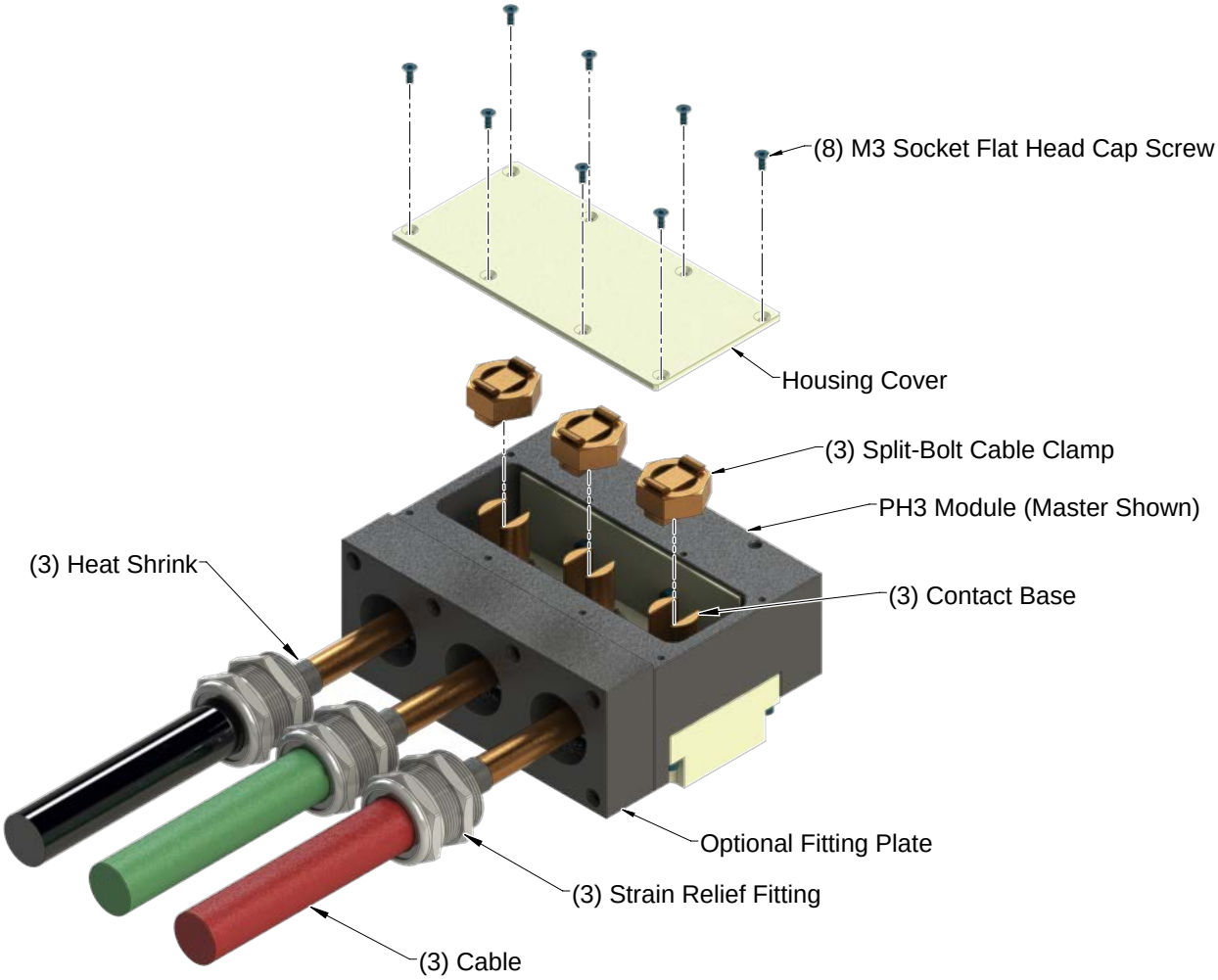

7. Install the housing cover to the module.
8. Install the (8) M3 socket flat head cap screws that secure the module cover to the mounting plate using a 2 mm hex key and tighten to 4 in-lbs (0.45 Nm).
9. Install and tighten the strain relief fittings to secure the each cable.
10. Install the module onto the Tool Changer or Utility Coupler. Refer to *Section 2.3—Module Installation*.

2.2 Cable Removal

Refer to *Figure 2.1*.

Tools required: *2 mm hex key, 1-1/8" socket, ratchet wrench*

1. To access the inside of the housing, remove the (8) M3 socket flat head cap screws that secure the housing cover to the module using a 2 mm hex key and remove the housing cover.
2. Remove the (3) split-bolt cable clamps using a 1-1/8" socket wrench.
3. Disconnect the power cables from the contact bases.
4. Loosen the jam nut on the strain relief fittings and pull the cables out.

2.3 Module Installation

Tools required: *5 mm hex key, torque wrench*

Supplies required: *Clean rag, Loctite® 242*

1. Place the Tool in a secure location.
2. Clean the mounting surfaces.
3. Using the ledge feature, place the module into the appropriate location on the Tool Changer or Utility Coupler. Align the module with the Tool Changer or Utility Coupler using the dowels in the bottom of the ledge feature. Refer to *Figure 2.5*.
4. If the fasteners do not have pre-applied adhesive, apply Loctite 242 to the supplied M6 socket head cap screws.
5. Using a 5 mm hex key, install the (2) M6 Socket Head Cap Screws that secure the module to the Tool Changer or Utility Coupler and tighten to 89 in-lbs (10 Nm).
6. Safely resume normal operation.

Figure 2.5—Module Installation

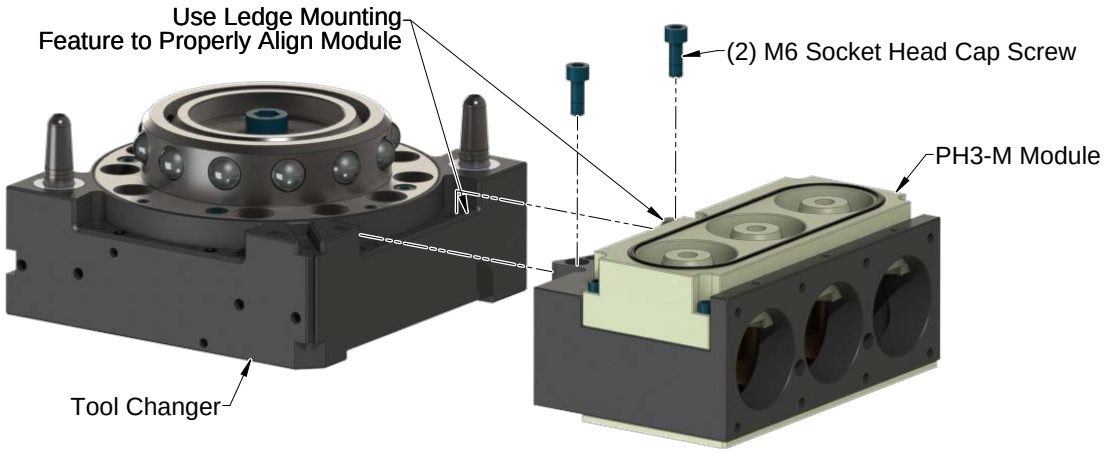

2.4 Module Removal

Tools required: *5 mm hex key, 1-1/8" socket, ratchet wrench*

1. Place the Tool in a secure location.
2. Uncouple the Master and Tool plates.
3. Turn off and de-energize all energized circuits (e.g. electrical, air, water, etc.).
4. Prior to removing the module, use a marker pen to scribe a line or indication between the Tool Changer or Utility Coupler and module body as a reminder where the module is to be re-installed.
5. Remove the (2) M6 socket head cap screws using a 5 mm hex key and lift the module from the Tool Changer or Utility Coupler.

3. Operation

High-current modules are designed to carry large currents to various industrial devices, to provide a separable joint in the power wiring. To maximize the service life of these components, the following points must be observed:



WARNING: The contacts are not a switch. For safety and to prevent equipment damage, disconnect and drain all power before coupling or uncoupling the Tool Changer or Utility Coupler.



CAUTION: Do not couple or uncouple the high-current modules unless electrical power has been disconnected and discharged both upstream and downstream from the modules. Arcing and contact damage will occur. Remove power and discharge both upstream and downstream modules before coupling or uncoupling modules.



CAUTION: Improper cable routing can result in wires and cables being pinched in the joint between the Tool Changer plates and premature failure of the electrical connectors. Properly route and secure all cables, particularly on the Master side.



CAUTION: Always protect the un-used Tool modules when not coupled to a Master module. Dust, debris, and weld spatter can contaminate the contact tips, which can cause arcing and a significant decrease in contact life.



CAUTION: Do not use stiff, heavy stranded cables which can inhibit operation of the high current module. Stiff cables can prevent compliant motion of the contacts and cause an intermittent or improper power connection. Operation of the high current module requires the customer supplied cables to be high-flex type with fine stranding and sufficient strain relief to allow free cable motion.

4. Maintenance

Under normal conditions, no special maintenance is necessary; however, it is recommended that periodic inspections be performed to assure long-lasting performance and verify that unexpected damage has not occurred. Refer to the list below for periodic maintenance items.



DANGER: This module has a voltage of 50V or greater; always remove power before contacting the module. Arcing and damage occur if power is not removed from the module during maintenance or service. Always remove power before attaching or disconnecting cables, separating or inserting the mating couplers, or making any contact with the Tool Changer or Utility Coupler.



WARNING: Do not perform maintenance or repair(s) on the Tool Changer or modules unless the Tool is safely supported or placed in the tool stand, all energized circuits (for example: electrical, air, water, etc.) are turned off, pressurized connections are purged and power is discharged from circuits in accordance with the customer specific safety practices and policies. Injury or equipment damage can occur with the Tool not placed and energized circuits on. Place the Tool in the tool stand, turn off and discharge all energized circuits, purge all pressurized connections, and verify all circuits are de-energized before performing maintenance or repair(s) on the Tool Changer or modules.

If the Tool Changer or Utility Coupler is used in dirty environments (for example: welding or deburring applications), limit the exposure of the Tool Changer or Utility Coupler. Idle Tool assemblies should be covered to prevent debris from settling on the mating surface. Also, the Master assembly should be exposed for only a short period of time during Tool change and down time. Perform the following visual inspection monthly:

- Inspect the mounting fasteners to ensure they are tight. If loose, tighten to the proper torque. Refer to *Section 2.3—Module Installation.*
- Cable connections should be inspected during maintenance periods to ensure they are secure. Loose connections should be cleaned and re-tightened. Inspect cable sheathing for damage, repair or replace damaged cabling. Loose connections or damaged cabling are not expected and may indicate improper routing and/or strain relieving.
- Inspect the Master and Tool contact tips for pin damage, debris or darkened pins. Refer to *Section 5.2.1—Master Module Contact Tip Replacement* and *Section 5.2.2—Tool Module Contact Tip Replacement*.
- Inspect seal for wear, abrasion, and cuts. If worn or damaged, replace. Refer to *Section 5.2.4—Tubular Seal Replacement.*

5. Troubleshooting and Service Procedures

Troubleshooting and service information to help diagnose conditions and repair the module is provided in the following section.

DANGER: This module has a voltage of 50V or greater; always remove power before contacting the module. Arcing and damage occur if power is not removed from the module during maintenance or service. Always remove power before attaching or disconnecting cables, separating or inserting the mating couplers, or making any contact with the Tool Changer or Utility Coupler.

WARNING: Do not perform maintenance or repair(s) on the Tool Changer or modules unless the Tool is safely supported or placed in the tool stand, all energized circuits (for example: electrical, air, water, etc.) are turned off, pressurized connections are purged and power is discharged from circuits in accordance with the customer specific safety practices and policies. Injury or equipment damage can occur with the Tool not placed and energized circuits on. Place the Tool in the tool stand, turn off and discharge all energized circuits, purge all pressurized connections, and verify all circuits are de-energized before performing maintenance or repair(s) on the Tool Changer or modules.

5.1 Troubleshooting

Troubleshooting information is provided in the following table.

Table 5.1—Troubleshooting

Symptom	Possible Cause	Correction
Power intermittently functioning/not functioning	Object trapped between modules.	Remove the object, then re-attempt coupling.
	Contact Contamination due to environment.	Ensure the spring loaded contacts on the Tool side can move freely and are not bound by debris. Clean the spring pins to restore free operation. Clean Tool side module contacts, refer to *Section 5.2.2—Tool Module Contact Tip Replacement*. Inspect seal, replace if damaged. Refer to *Section 5.2.4—Tubular Seal Replacement*
	Contact Pin Separation.	Remove contamination on the contacts using a stiff nylon brush.
		Air supplied to Tool Changer or Utility Coupler is insufficient; improper valve used. Refer to Tool Changer or Utility Coupler manual for pneumatic requirements.
	Module Contact Damage due to Coupling/Uncoupling under load.	Revise operating procedures to only couple/uncouple with power disconnected and discharged. Replace module contacts, refer to *Section 5.2.1—Master Module Contact Tip Replacement* and *Section 5.2.2—Tool Module Contact Tip Replacement* for Tool module
	Rigid customer cable connection to module termination.	Change to high-flex, fine strand cables to terminate to high current module. Route and properly restrain cables to allow for motion of the Tool side contact.
	Cable damage - Pinched, torn, or fatigued cables, contact base, or contact spring worn out or damaged.	Inspect cables and contact base for damage, test cables, test contact springs, refer to *Section 5.1.1—Troubleshooting Sequence* To replace contact bases or spring, refer to *Section 5.2.3—Module Contact Base Replacement*

5.1.1 Troubleshooting Sequence



DANGER: This module has a voltage of 50V or greater; always remove power before contacting the module. Arcing and damage occur if power is not removed from the module during maintenance or service. Always remove power before attaching or disconnecting cables, separating or inserting the mating couplers, or making any contact with the Tool Changer or Utility Coupler.

The following sequence is recommended for troubleshooting primary current problems:

1. First examine all the cables, cable connectors, and power sources for problems and correct as necessary.
2. Use a known good cable to bypass the modules and directly connect the supply to the load.
3. If the load does not operate properly with known good cables, the problem is in the supply or load. Troubleshoot these components using that manufacturer's procedures.
4. If the load operates properly, use the known good cables from the step 2 to connect between the supply and Master module. Use a second set of the known good cables to connect the Tool module to the load.
5. If the load operates properly, the problem is in the old cables, which must be repaired or replaced.
6. If the load does not operate properly, the problem is in the high-current modules.
7. Externally, examine the modules for loose, missing, or damaged contacts replacing and tightening as necessary.
8. Remove the covers from the modules and insure that the cables have not come loose from the contact bases. Re-secure the cables as necessary. Refer to the cable installation section.
9. Use a hardwood dowel or other non-metallic, soft rod to push axially on the tool side contacts to verify free axial motion. If the springs under these contacts do not allow axial motion of the contacts, replace the springs accordingly as outlined above in the maintenance section.

If the above steps fail to restore proper operation contact ATI for service.

5.2 Service Procedures

Component replacement procedures are provided in the following section.

5.2.1 Master Module Contact Tip Replacement

Parts required: *Refer to Section 8—Drawings*

Tools required: *2.5 mm or 3 mm hex key, torque wrench*

Supplies required: *Non-hardening, conductive silver bearing grease (ATI #0290-70-0000-50-008, McMaster-Carr #1219K57, AI Technology #ELGR8501 or equivalent)*

Removal:

1. Place the Tool in a secure location.
2. Uncouple the Master and Tool plates.
3. Turn off and de-energize all energized circuits (for example: electrical, pneumatic, and hydraulic circuits).
4. Remove the M3 or M4 socket head cap screw from the center of the insulator post using a 2.5 mm or 3 mm hex key.
5. Remove the insulator post and the Master contact tip. Discard the contact tip.

Figure 5.1—Master Module Contact Tip Replacement

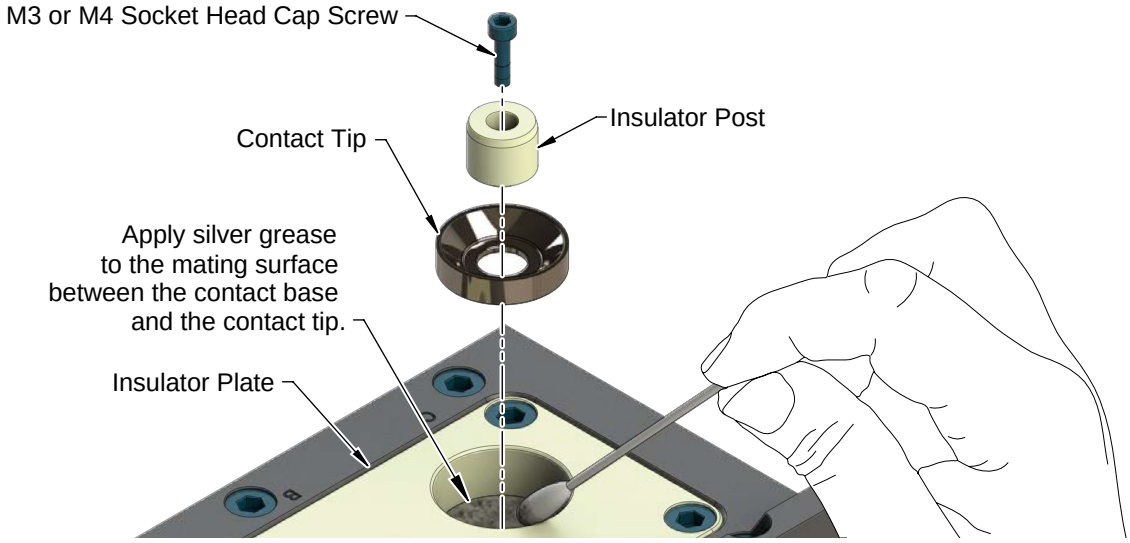

Installation:

NOTICE: Always replace Master and Tool contact tips at the same time (as pairs). Failure to change both halves of a mating pair will result in decreased life of the new component.

6. Apply a liberal amount of non-hardening, conductive silver bearing grease (ATI #0290-70-0000-50-008, McMaster-Carr #1219K57, AI Technology #ELGR8501 or equivalent) with a volume resistivity of 0.001 ohm-cm minimum to the mating surface between the contact base and the new contact tip. Insert the new contact tip into the insulator plate and reinstall the center insulator post.
7. For a M3 socket head cap screw, insert the screw into the insulator post and secure using a 2.5 mm hex key. Tighten to 10 in-lbs (1.1 Nm). For a M4 socket head cap screw, insert the screw into the insulator post and secure using a 3 mm hex key. Tighten to 12 in-lbs (1.36 Nm).
8. Safely resume normal operation.

5.2.2 Tool Module Contact Tip Replacement

Parts required: *Refer to Section 8—Drawings*

Tools required: *2.5 mm or 3 mm hex key, torque wrench*

Supplies required: *Non-hardening, conductive silver bearing grease (ATI 0290-70-0000-50-008, McMaster-Carr #1219K57, AI Technology #ELGR8501 or equivalent)*

Removal:

1. Place the Tool in a secure location.
2. Uncouple the Master and Tool plates.
3. Turn off and de-energize all energized circuits (for example: electrical, pneumatic, and hydraulic circuits).
4. Remove the or M4 socket head cap screw from the center of the Tool contact tip using a 2.5 mm or 3 mm hex key.
5. Remove the Tool contact tip from the contact carrier and discard.

Figure 5.2—Tool Module Contact Tip Replacement

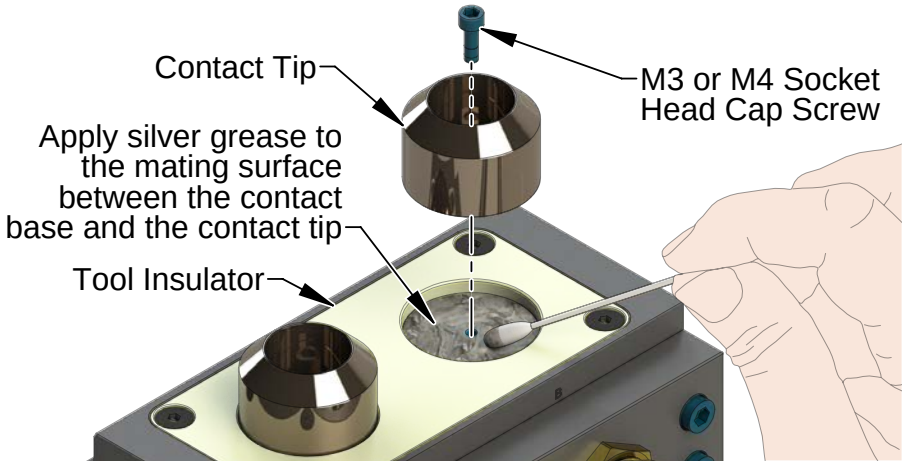

Installation:

NOTICE: Always replace Master and Tool contact tips at the same time (as pairs). Failure to change both halves of a mating pair will result in decreased life of the new component.

6. Apply a liberal amount of non-hardening, conductive silver bearing grease (ATI 0290-70-0000-50-008, McMaster-Carr #1219K57, AI Technology #ELGR8501 or equivalent) with a volume resistivity of 0.001 ohm-cm minimum to the mating surface between the contact base and the new contact tip.
7. Insert the new contact tip into the contact carrier.
8. For a M3 socket head cap screw, insert the screw into the Tool contact tip and secure using a 2.5 mm hex key. Tighten to 10 in-lbs (1.1 Nm). For a M4 socket head cap screw, insert the screw into the Tool contact tip and secure using a 3 mm hex key. Tighten to 12 in-lbs (1.36 Nm).
9. Safely resume normal operation.

5.2.3 Module Contact Base Replacement

Parts required: *Refer to Section 8—Drawings*

Tools required: *2 mm and 3 mm hex keys, 1-1/8" socket, ratchet wrench, torque wrench, snap ring pliers*

1. Place the Tool in a secure location.
2. Uncouple the Master and Tool plates.
3. Turn off and de-energize all energized circuits (e.g. electrical, air, water, etc.).
4. Remove the module from the Tool Changer or Utility Coupler. Refer to *Section 2.4—Module Removal*.
5. To access the inside of the housing, remove the (8) M3 socket flat head cap screws that secure the housing cover to the module using a 2 mm hex key. Remove the housing cover.
6. Remove the (3) split-bolt cable clamps from the contact bases using 1-1/8" socket wrench.

Figure 5.3—Housing Cover and Split-Bolt Cable Clamps

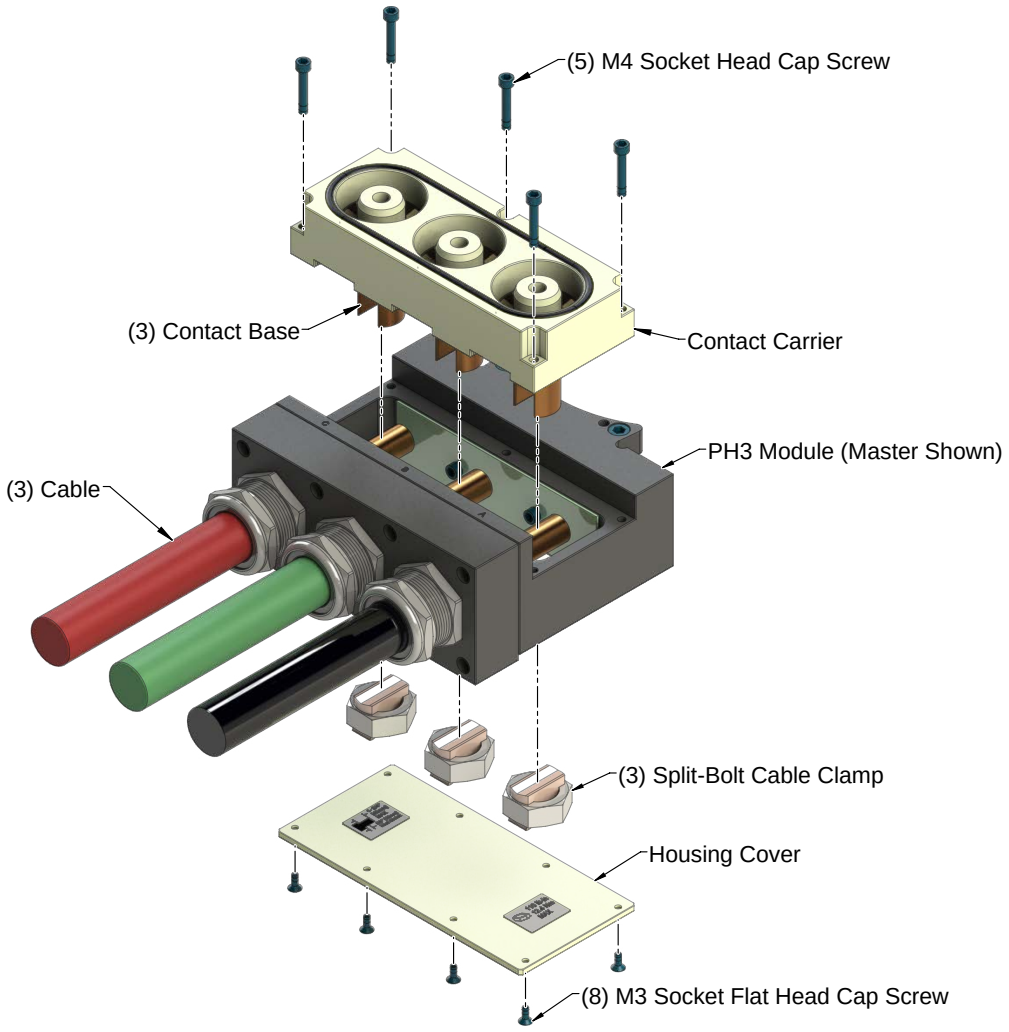

7. Remove the contact tips and springs from the contact base to be replaced. Refer to *Section 5.2.1—Master Module Contact Tip Replacement* and *Section 5.2.2—Tool Module Contact Tip Replacement*.
8. Remove the (5) M4 socket head cap screws that secure the contact carrier to the module using a 3 mm hex key.

9. Remove the contact carrier from the module. Refer to *Figure 5.4*.
10. Using snap ring pliers, remove the snap ring from the contact base being replaced.
11. Remove the contact base.
12. Install the new contact base into the insulator block in the correct orientation, see *Figure 5.4*.

Figure 5.4—Contact Carrier and Contact Bases

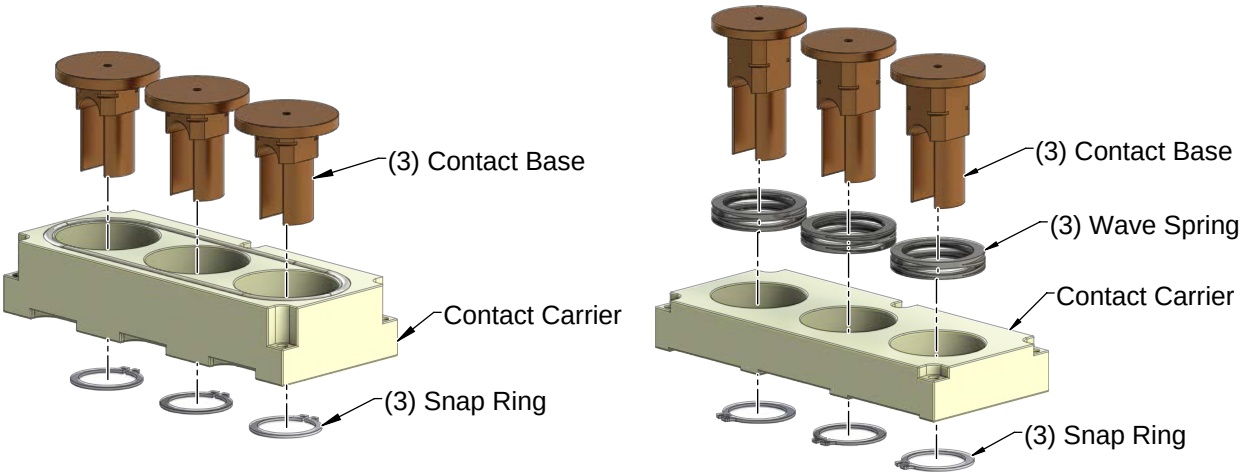

13. For Tool side, install the wave springs.
14. Using snap ring pliers, install the snap ring onto the new contact base.
15. Install the contact carrier into the module. Refer to *Figure 5.3*.

CAUTION: Use of stiff heavy stranded cables can cause improper operation of the high current module. The use of stiff cables can prevent compliant motion of the contacts and cause an intermittent or improper power connection. For proper operation, ATI requires the customer-supplied cables be of the high-flex type with fine stranding and proper strain relief to allow for a minimum of the 4 mm free cable motion as specified in *Section 8—Drawings*.

16. Insert each prepared cable end into the appropriate contact base and replace the split-bolt nut. Make sure that no loose wire filaments are protruding from the contact bases. Also, ensure that the clamping lugs are not clamped on the cable insulation and that the entire clamp lug is contacting the copper wire.
17. Install the (5) M4 socket head cap screws that secure the contact carrier to the module using a 3 mm hex key. Tighten to 12 in-lbs (1.36 Nm).
18. Tighten the split-nut cable clamps to 110 in-lbs (12.4 Nm) using a 1-1/8” socket wrench.
19. Install the contact tip to the contact base to be replaced. Refer to *Section 5.2.1—Master Module Contact Tip Replacement* and *Section 5.2.2—Tool Module Contact Tip Replacement*.

NOTICE: When routing cables inside the module, ensure that the cables and cable insulation do not contact the other contact bases. Contact could cause a short or damage to cable insulation.

20. Install the housing cover to the module.
21. Install the (8) M3 socket flat head cap screws that secure the module cover to the mounting plate using a 2 mm hex key and tighten to 4 in-lbs (0.45 Nm).
22. Install the module onto the Tool Changer or Utility Coupler. Refer to *Section 2.3—Module Installation.*
23. Safely resume normal operation.

5.2.4 Tubular Seal Replacement

Parts required: *Refer to Section 8—Drawings*

1. Place the Tool in a secure location.
2. Uncouple the Master and Tool plates.
3. Turn off and de-energize all energized circuits (for example: electrical, pneumatic, and hydraulic circuits).
4. To remove the existing seal, pinch the edge of the seal with your fingers and gently pull the seal away from the contact carrier on the Master.
5. To install a new seal, wet the new seal and push it into the groove in the contact carrier.
6. Ensure the seal is seated completely into the groove using your finger tip.
7. Safely resume normal operation.

Figure 5.5—Seal Replacement

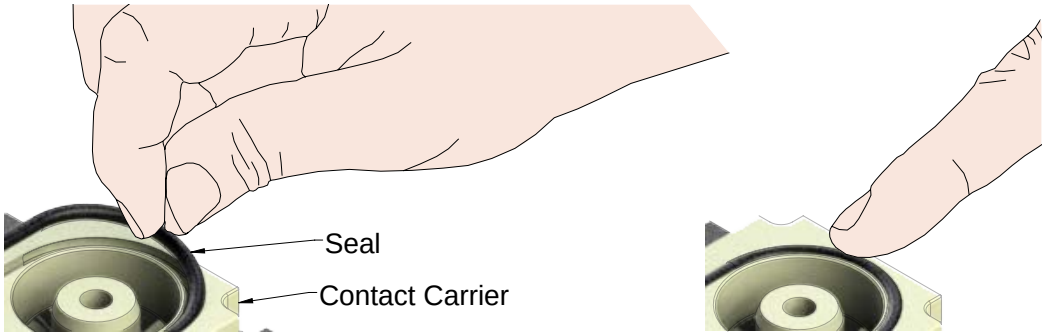

6. Serviceable Parts

Refer to *Section 8—Drawings.*

Table 6.1—Master Module Mounting Fasteners	
Part Number	**Description**
3500-1066020-21A	M6 x 20 Socket Head Cap Screw, SS, ND Microspheres, 0-3 uncoated lead thds. 5-7 coated thds. IFI525

Table 6.2—Tool Module Mounting Fasteners	
Part Number	**Description**
3500-1066016-21A	M6 x 16 Socket Head Cap Screw, DIN 912 A4 S/S (316) ND Ind. Microspheres Epoxy, Yellow. 0-3 uncoated lead thds. 5-7 coated thds.

Table 6.3—Special Tools	
Part Number	**Description**
3690-0000064-60	Brush, Blue Nylon All Purpose (Contact Pin Cleaning)

7. Specifications

Table 7.1—Master Module	
9121-PH3-M	Power Module with (3) 600A, 800V Contacts, #2 to #4/0 Cable - Master Side
Interface Connections	(3) Power Contacts
Electrical Rating	600 A, 800 V Max. Plated, conical contacts, No-Touch on the Master side.
Cable Sizes Supported	# 4 Thru #2 AWG (Others, Contact ATI) Split-bolt terminals are used to attach the conductor to the contact post.
Weight	6.07 lbs (2.75 kg)

Table 7.2—Tool Module	
9121-PH3-T	Power Tool Module with (3) 600A, 800V Contacts, #2 to #4/0 Cable
Interface Connections	(3) Power Contacts
Electrical Rating	600 A, 800 V Max. Plated, conical contacts, No-Touch on the Master side.
Cable Sizes Supported	# 4 Thru #2 AWG High-flex type with fine stranding (Others, Contact ATI) Split-bolt terminals are used to attach the conductor to the contact post.
Weight	4.98 lbs (2.26 kg)

Table 7.3—Tool Side Cover	
9121-PHA-T	PHA-T Protective Cover Plate Assembly
Weight	TBD lbs (TBD kg)

8. Drawings

Drawings are available on the *ATI website* or by contacting an ATI representative.