Rev.	Description	Initiator	Date
07	ECO 21712: Updated to reflect removal of cleat ledges.	BAW	1/4/2024

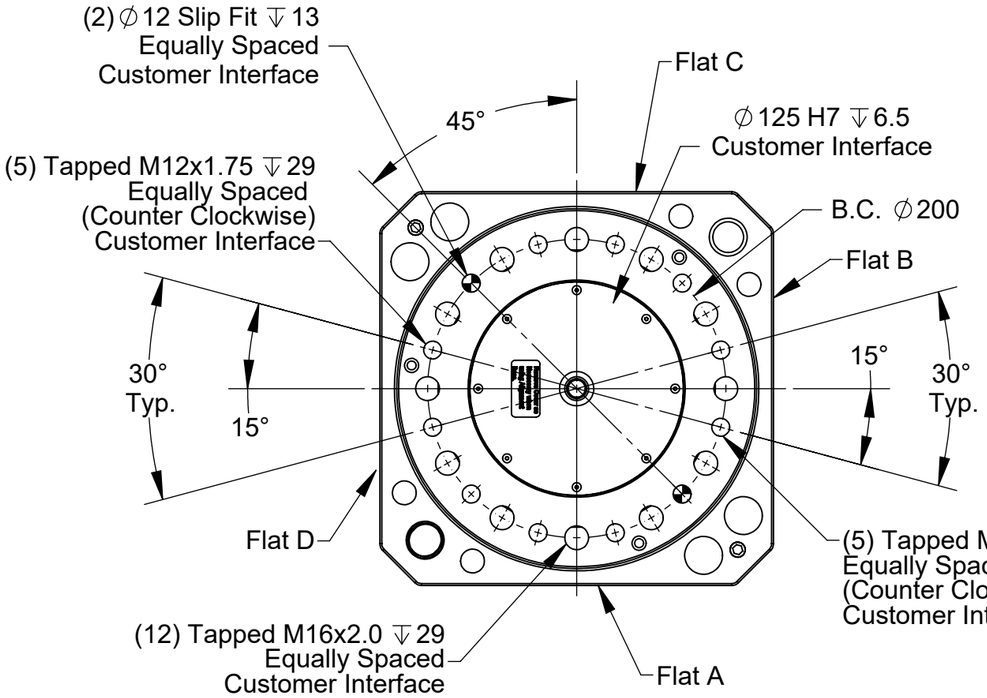

Tool Side
(projection only)

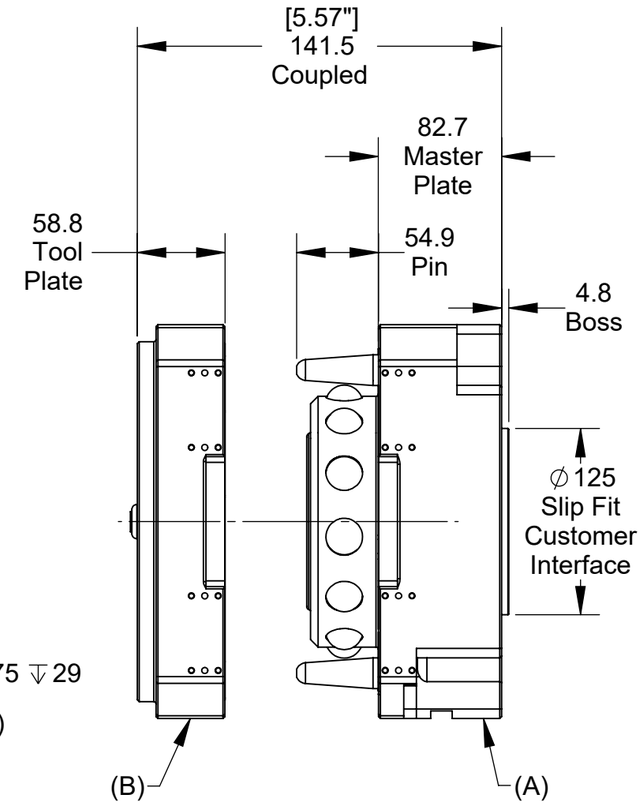

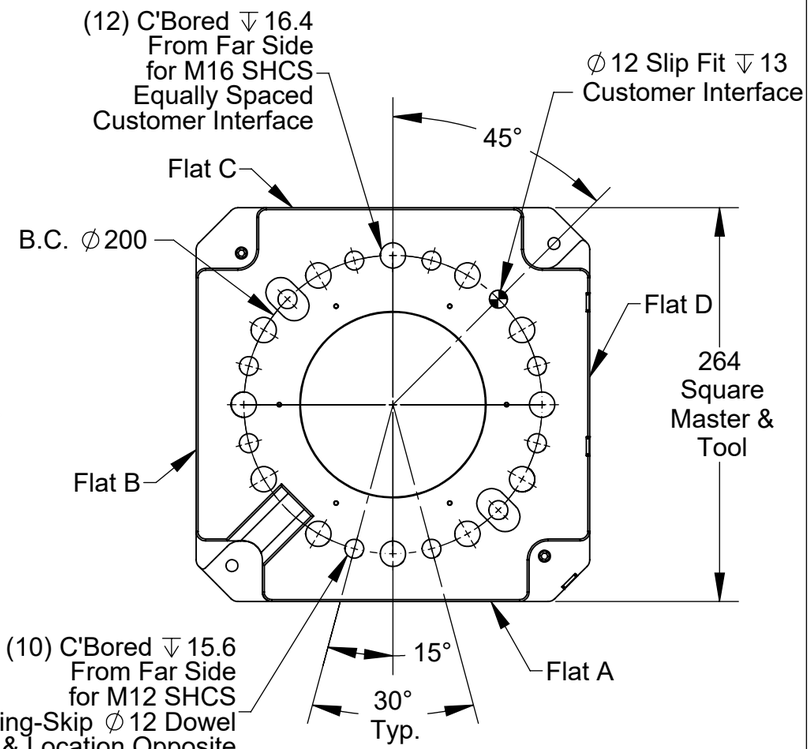

Master Side
(projection only)

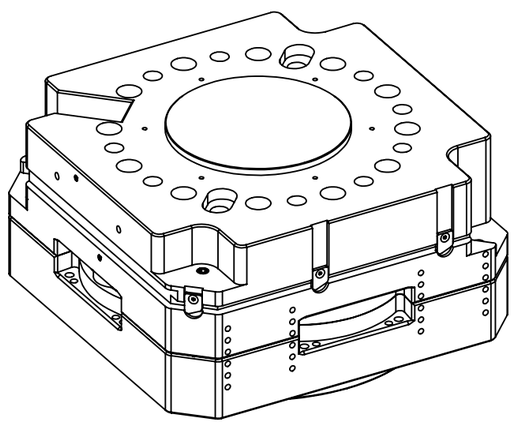

Scale 1:4

Part Numbers:
(A) Master: 9121-510DMX-0-0-0-0
(B) Tool: 9121-510DT-0-0-0-0

NOTES: UNLESS OTHERWISE SPECIFIED.

DO NOT SCALE DRAWING. ALL DIMENSIONS ARE IN MILLIMETERS.

3rd ANGLE PROJECTION

ATI INDUSTRIAL AUTOMATION

1031 Goodworth Drive, Apex, NC 27539, USA
Tel: +1.919.772.0115 www.ati-ia.com
Fax: +1.919.772.8259 ISO 9001 Registered Company

PROPERTY OF ATI INDUSTRIAL AUTOMATION, INC. NOT TO BE REPRODUCED IN ANY MANNER EXCEPT ON ORDER OR WITH PRIOR WRITTEN AUTHORIZATION OF ATI.

DRAWN BY: D. Swanson 5/21/09

CHECKED BY: D.Norton 6/4/09

PROJECT #

SHEET 1 OF 3

TITLE: QC-510 Base Tool Changer

SCALE	SIZE	DRAWING NUMBER	REVISION
1:4	B	9630-20-510	07

QC-510 Master Assembly

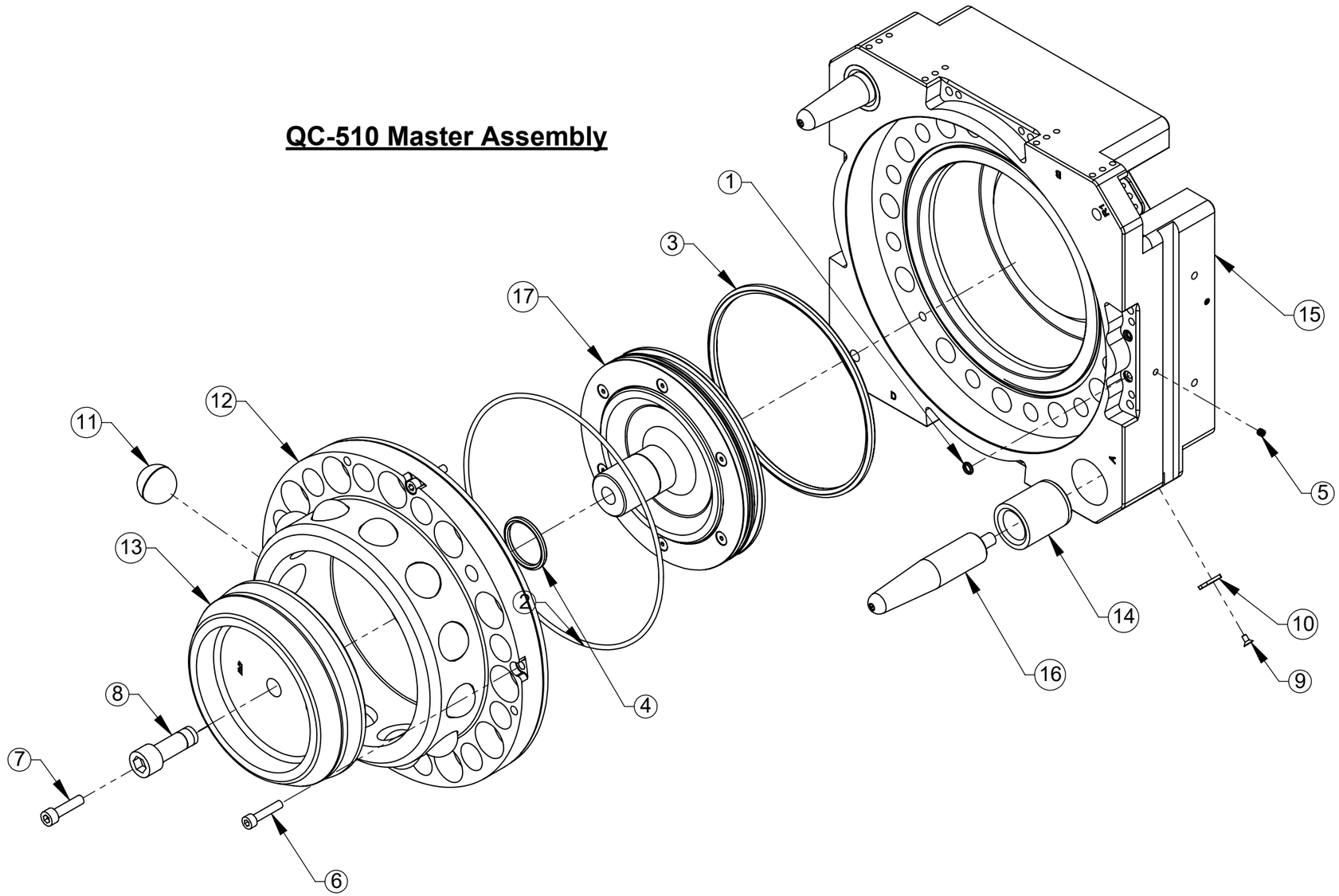

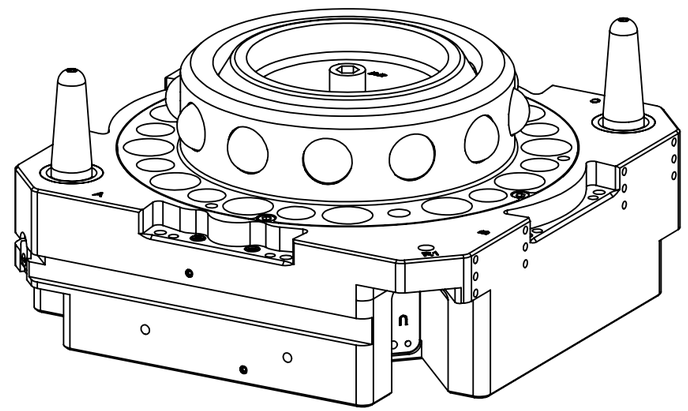

NOTES: UNLESS OTHERWISE SPECIFIED.

DO NOT SCALE DRAWING. ALL DIMENSIONS ARE IN MILLIMETERS.

3rd ANGLE PROJECTION

ATI INDUSTRIAL AUTOMATION

1031 Goodworth Drive, Apex, NC 27539, USA
Tel: +1.919.772.0115 www.ati-ia.com
Fax: +1.919.772.8259 ISO 9001 Registered Company

PROPERTY OF ATI INDUSTRIAL AUTOMATION, INC. NOT TO BE REPRODUCED IN ANY MANNER EXCEPT ON ORDER OR WITH PRIOR WRITTEN AUTHORIZATION OF ATI.

DRAWN BY: D. Swanson 5/21/09	TITLE: QC-510 Base Tool Changer			
CHECKED BY: D.Norton 6/4/09				
PROJECT #	SHEET 2 OF 3	SCALE: 1:3	SIZE: B	DRAWING NUMBER: 9630-20-510	REVISION: 07

QC-510 Tool Assembly

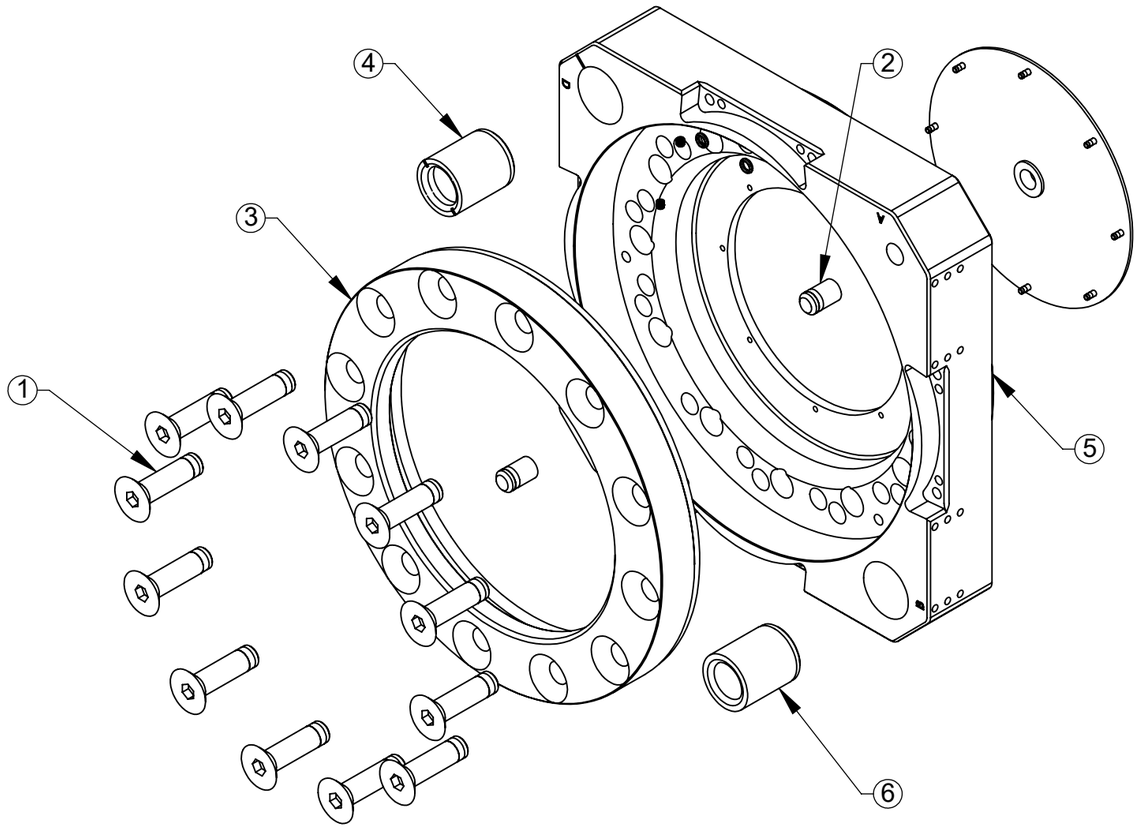

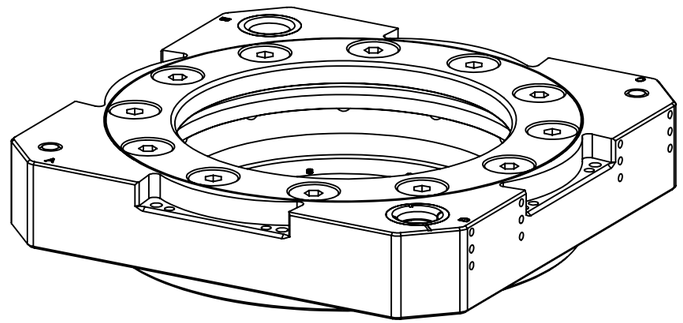

NOTES: UNLESS OTHERWISE SPECIFIED.

DO NOT SCALE DRAWING. ALL DIMENSIONS ARE IN MILLIMETERS.

3rd ANGLE PROJECTION

1031 Goodworth Drive, Apex, NC 27539, USA
Tel: +1.919.772.0115 *www.ati-ia.com*
Fax: +1.919.772.8259 *ISO 9001 Registered Company*

PROPERTY OF ATI INDUSTRIAL AUTOMATION, INC. NOT TO BE REPRODUCED IN ANY MANNER EXCEPT ON ORDER OR WITH PRIOR WRITTEN AUTHORIZATION OF ATI.

DRAWN BY: D. Swanson 5/21/09

CHECKED BY: D.Norton 6/4/09

PROJECT #

SHEET 3 OF 3

TITLE: QC-510 Base Tool Changer

SCALE	SIZE	DRAWING NUMBER	REVISION
1:3	B	9630-20-510	07