Rev.	Description	Initiator	Date
09	ECO 22132; 3700-20-8065 was 3700-20-2996.	LJH	5/9/2025

AG2 Master Module
(9121-AG2-M)

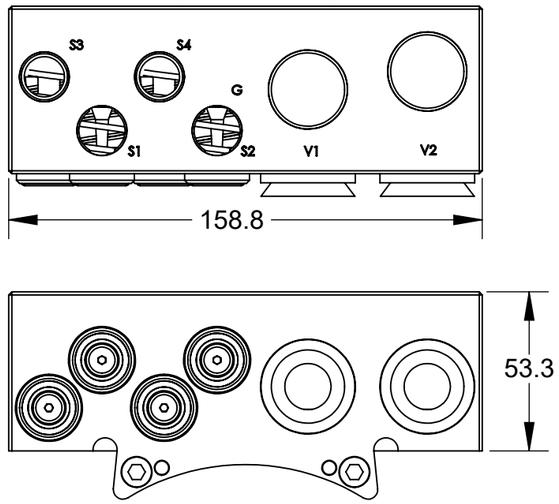

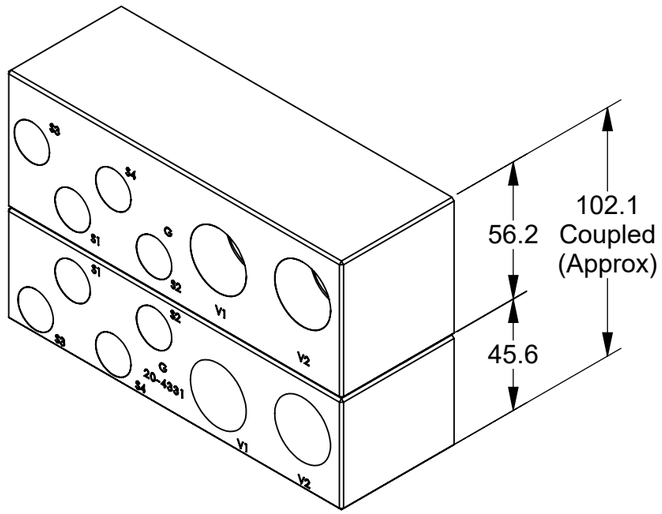

AG2 Tool Module
(9121-AG2-T)

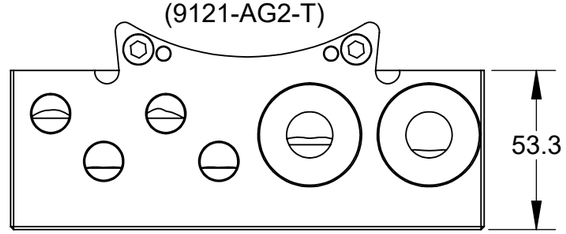

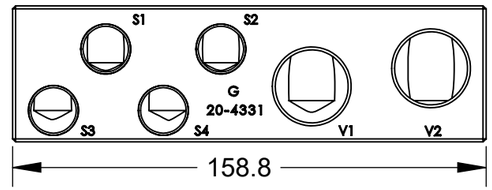

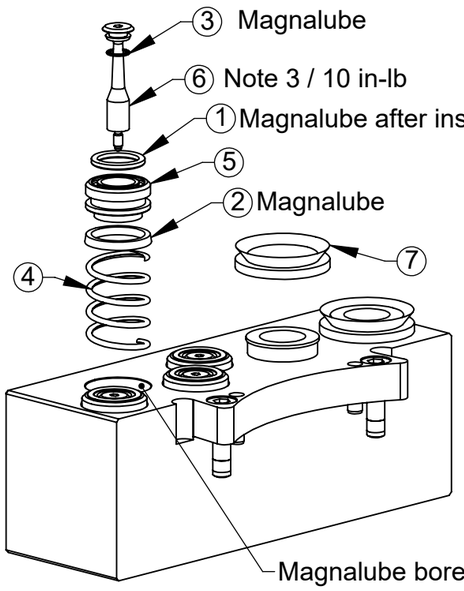

AG2-M Serviceable Parts

ITEM NO.	QTY.	PART NUMBER	DESCRIPTION
1	4	3410-0001065-01	O-Ring 14MM X 2MM Buna
2	4	3410-0001068-01	Mini U-Cup Seal 18mm ID x 22mm Buna
3	4	3410-0001183-01	O-Ring 6MM X 2MM Buna D90
4	4	3610-3312500-20	SPRING, FLUID/AIR MODULE, MASTER
5	4	3700-20-2994	Master Check Valve Piston
6	4	3700-20-8065	VALVE STEM, HIGH STRENGTH
7	2	4010-0000030-01	V-Ring Seal

Note: Service Kit 9120-F2-M-Kit consists of (1) each of items 1 thru 4.
Note: Service Kit 9120-F4-M-Kit consists of (1) each of items 1 thru 6.

Notes:
Materials of Construction:
1. Housings - Anodized aluminum.
2. Valve Components - Stainless Steel, Nitrile & PVC
3. Replacement stem contains pre-applied thread locker. Use Loctite 7649 primer and Loctite 222 if reassembling with original stem.

Operations:
4. Pneumatic Operation Only.
5. For best results keep air module mating surfaces free and clear of any debris.
6. Checked ports can produce significant forces when under high supply pressures. These forces have to be overcome to achieve tool changer coupling.
7. Checked ports do not support vacuum conditions.
8. AG2-M master module has (4) G 3/8 checked ports and (2) G 3/4 vacuum ports.
9. AG2-T tool module has (4) G 3/8 unchecked ports and (2) G 3/4 vacuum ports.

NOTES: UNLESS OTHERWISE SPECIFIED.

DO NOT SCALE DRAWING. ALL DIMENSIONS ARE IN MILLIMETERS.

3rd ANGLE PROJECTION

ATI INDUSTRIAL AUTOMATION
1031 Goodworth Drive, Apex, NC 27539, USA
Tel: +1.919.772.0115 www.ati-ia.com
Fax: +1.919.772.8259 ISO 9001 Registered Company

PROPERTY OF ATI INDUSTRIAL AUTOMATION, INC. NOT TO BE REPRODUCED IN ANY MANNER EXCEPT ON ORDER OR WITH PRIOR WRITTEN AUTHORIZATION OF ATI.

DRAWN BY: J.Snape 4/13/05
CHECKED BY: P. Sparrow 4/15/05
PROJECT # 040331-1 SHEET 1 OF 1

TITLE: AG2 Master & Tool Module Drawing

SCALE	SIZE	DRAWING NUMBER	REVISION
1:2	B	9630-20-AG2	09