Rev.	Description	Initiator	Date
08	ECO 22132; 3700-20-8065 was 3700-20-2996	LJH	5/9/2025

AM2 Master Module
(9121-AM2-M)

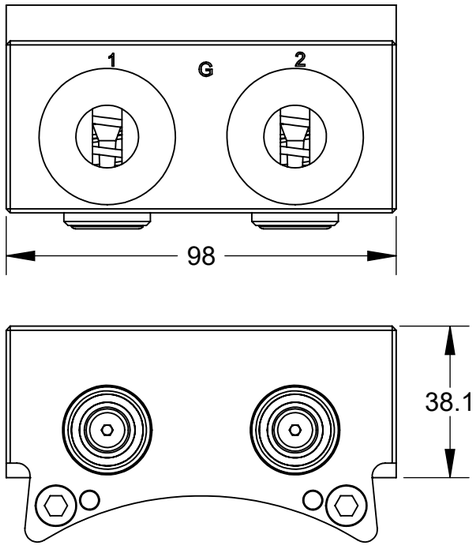

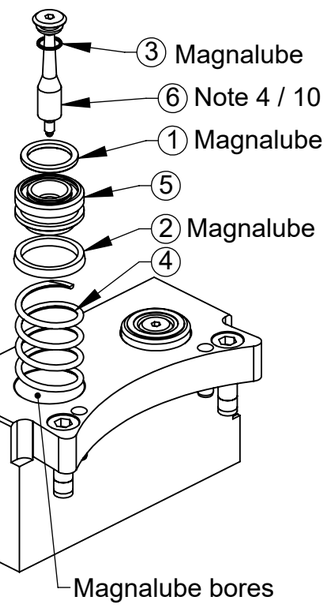

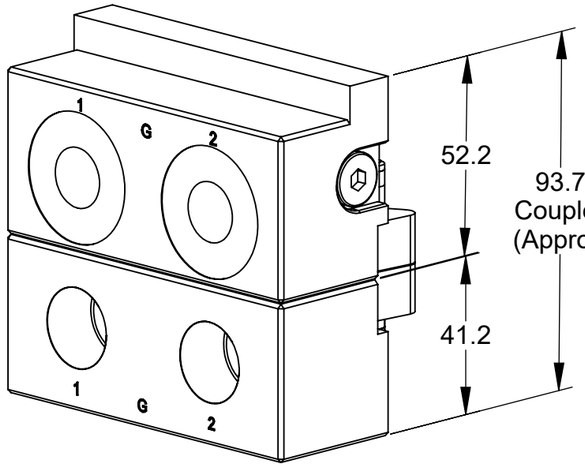

AM2 Tool Module (9121-AM2-T) Shown
AM3 Tool Module (9121-AM3-T)

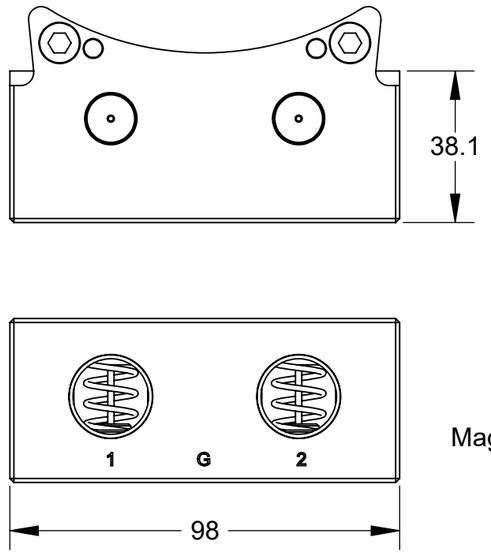

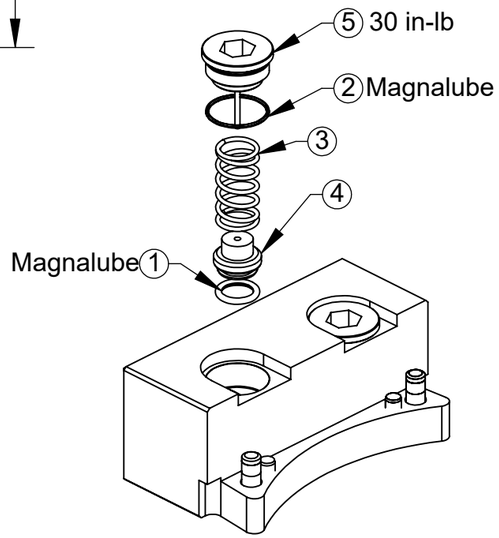

Notes:
Materials of Construction:
1. Housings - Anodized aluminum.
2. Valve Components - Stainless Steel, Nitrile & PVC
3. Quantities shown in bill of materials are for AM2 master and AM2 tool.
4. Replacement stem contains pre-applied thread locker. Use Loctite 7649 primer and Loctite 222 if reassembling with original stem.

Operations:
5. For best results keep air module mating surfaces free and clear of any debris.
6. Checked ports can produce significant forces when under high supply pressures. These forces have to be overcome to achieve tool changer coupling.
7. Checked ports do not support vacuum conditions.
8. AM2-M master module has (2) G 1/2 checked ports.
9. AM2-T tool module has (2) checked G 1/2 ports. AM3-T has (2) pass thru G 1/2 ports.

AM2-M Serviceable Parts

ITEM NO.	QTY.	PART NUMBER	DESCRIPTION
1	2	3410-0001065-01	O-Ring 14MM X 2MM Buna
2	2	3410-0001068-01	Mini U-Cup Seal 18mm ID x 22mm Buna
3	2	3410-0001183-01	O-Ring 6MM X 2MM Buna D90
4	2	3610-3312500-20	Spring, Fluid/Air Module, Master
5	2	3700-20-2994	Master Check Valve Piston
6	2	3700-20-8065	VALVE STEM, HIGH STRENGTH

Note: Service Kit 9120-F2-M-Kit consists of (1) each of items 1 thru 4.
Note: Service Kit 9120-F4-M-Kit consists of (1) each of items 1 thru 6.

AM2-T, AM3-T Serviceable Parts

ITEM NO.	QTY.	PART NUMBER	DESCRIPTION
1	2	3410-0001067-01	O-ring, 10mm x 2mm, Buna N, Dur. 90
2	2	3410-0001284-01	O-ring, .669OD x .047 wall, 70D, Buna-N
3	2	3610-2712500-20	Spring, Fluid/Air Module, Tool
4	2	3700-20-1457	Tool Fluid/Air Check Valve Piston
5	2	9005-20-2267	F/A Plug Assembly, Tool, 3/8" Valves

Note: Service Kit 9120-F1-T-Kit consists of (1) each of items 1, 2, & 3.
Note: Service Kit 9120-F3-T-Kit consists of (1) each of items 1 thru 5.

NOTES: UNLESS OTHERWISE SPECIFIED.

DO NOT SCALE DRAWING. ALL DIMENSIONS ARE IN MILLIMETERS.

3rd ANGLE PROJECTION

ATI INDUSTRIAL AUTOMATION
1031 Goodworth Drive, Apex, NC 27539, USA
Tel: +1.919.772.0115 *www.ati-ia.com*
Fax: +1.919.772.8259 *ISO 9001 Registered Company*

PROPERTY OF ATI INDUSTRIAL AUTOMATION, INC. NOT TO BE REPRODUCED IN ANY MANNER EXCEPT ON ORDER OR WITH PRIOR WRITTEN AUTHORIZATION OF ATI.

DRAWN BY: B. Digeso, 1/12/06
CHECKED BY: R.Heavner 10/31/06
PROJECT # 060110-1 SHEET 1 OF 1

TITLE: AM2-M / AM2-T / AM3-T Module Drawing

SCALE	SIZE	DRAWING NUMBER	REVISION
1:1.5	B	9630-20-AM2	08