REV.	DESCRIPTION	INITIATOR	DATE
02	ECO 22132; 3700-20-8065 was 3700-20-2996	LJH	5/9/2025

AN5 Master Module
(9121-AN5-M)

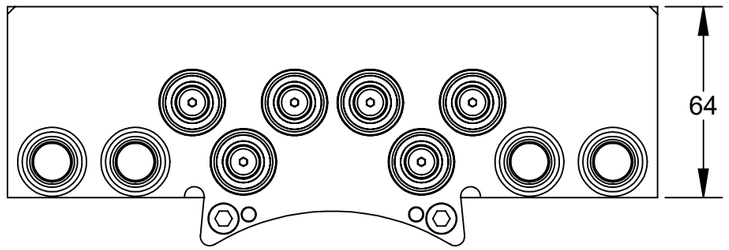

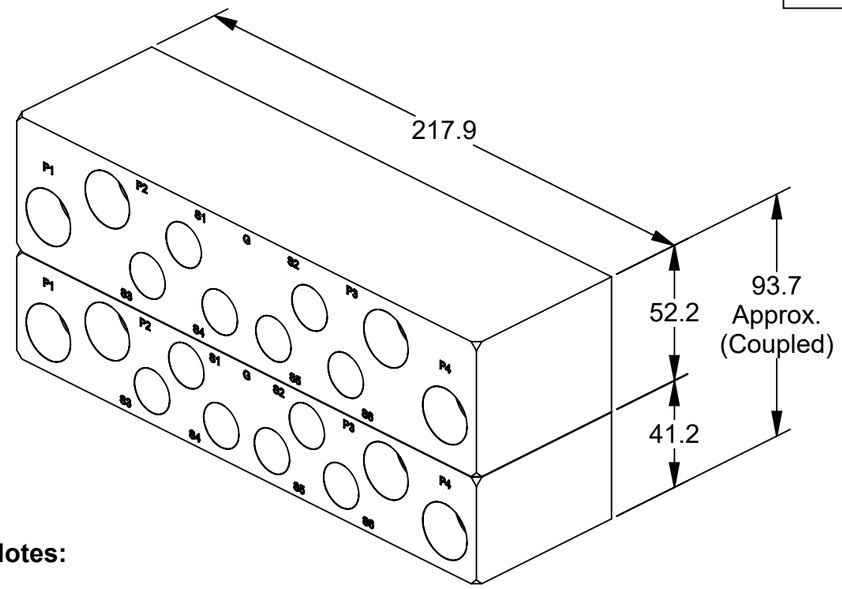

AN5 Tool Module
(9121-AN5-T)

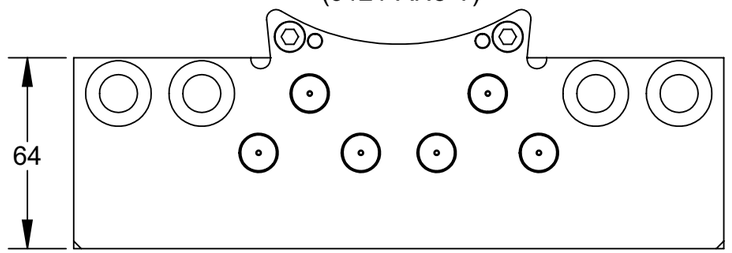

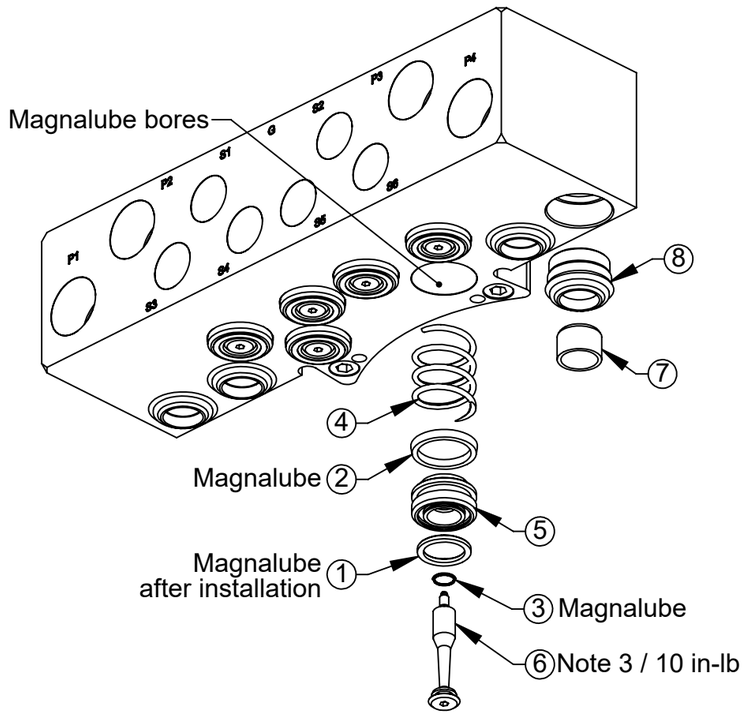

Notes:

Materials of Construction
1. Housings - Anodized Aluminum
2. Valve Components - Stainless Steel, Nitrile and PVC
3. Replacement stem contains pre-applied thread locker. Use Loctite 7649 primer and Loctite 222 if reassembling with original stem.

Operation:
4. For best results keep air module mating surfaces free and clear of any debris.
5. Checked ports can produce significant forces when under high supply pressures. These forces have to be overcome to achieve tool changer coupling.
6. Checked ports do not support vacuum conditions.
7. The modules have (6) G 3/8 (BSPP) checked ports and (4) G 1/2 (BSPP) Pass-thru ports for air or vacuum service.

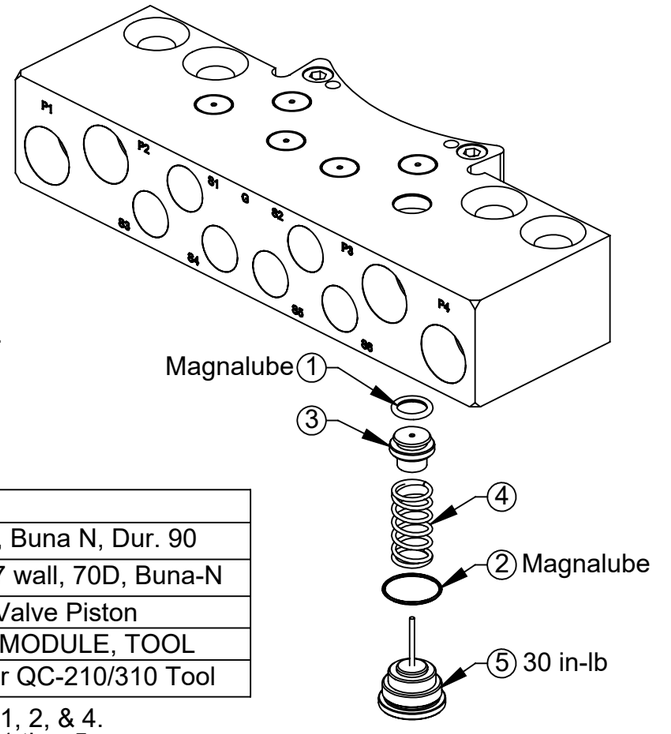

ITEM NO.	QTY.	PART NUMBER	DESCRIPTION
1	6	3410-0001065-01	O-Ring 14MM X 2MM Buna
2	6	3410-0001068-01	Mini U-Cup Seal 18mm ID x 22mm Buna
3	6	3410-0001183-01	O-Ring 6MM X 2MM Buna D90
4	6	3700-20-1459	SPRING, FLUID/AIR MODULE, MASTER
5	6	3700-20-2994	Master Check Valve Piston
6	6	3700-20-8065	VALVE STEM, HIGH STRENGTH
7	4	3700-20-4748	Collar for 1/2" Bushing
8	4	4010-0000063-01	1/2" Rubber Bushing. Nitrile

Note: Service Kit 9120-F2-M-Kit consists of (1) each of items 1 thru 4.
Note: Service Kit 9120-F4-M-Kit consists of (1) each of items 1 thru 6.

ITEM NO.	QTY	PART NUMBER	DESCRIPTION
1	6	3410-0001067-01	O-ring, 10mm x 2mm, Buna N, Dur. 90
2	6	3410-0001284-01	O-ring, .669OD x .047 wall, 70D, Buna-N
3	6	3700-20-1457	Tool Fluid/Air Check Valve Piston
4	6	3700-20-1460	SPRING, FLUID/AIR MODULE, TOOL
5	6	3700-20-4121	Fluid/Air Long Plug for QC-210/310 Tool

Note: Service Kit 9120-F1-T-Kit consists of (1) each of items 1, 2, & 4.
Note: Service Kit 9120-F5-T-Kit consists of (1) each of items 1 thru 5.

NOTES: UNLESS OTHERWISE SPECIFIED.

DO NOT SCALE DRAWING. ALL DIMENSIONS ARE IN MILLIMETERS.

3rd ANGLE PROJECTION

ATI INDUSTRIAL AUTOMATION
1031 Goodworth Drive, Apex, NC 27539, USA
Tel: +1.919.772.0115 *www.ati-ia.com*
Fax: +1.919.772.8259 *ISO 9001 Registered Company*

PROPERTY OF ATI INDUSTRIAL AUTOMATION, INC. NOT TO BE REPRODUCED IN ANY MANNER EXCEPT ON ORDER OR WITH PRIOR WRITTEN AUTHORIZATION OF ATI.

DRAWN BY: M. Gala 6/27/2018
CHECKED BY: D. Bohle 6/28/2018
PROJECT # 171026-6 SHEET 1 OF 1

TITLE: AN5 Module Drawing

SCALE	SIZE	DRAWING NUMBER	REVISION
1:2	B	9630-20-AN5	02