Rev.	Description	Initiator	Date
03	ECO 22132; 3700-20-8065 was 3700-20-2996	LJH	5/12/2025

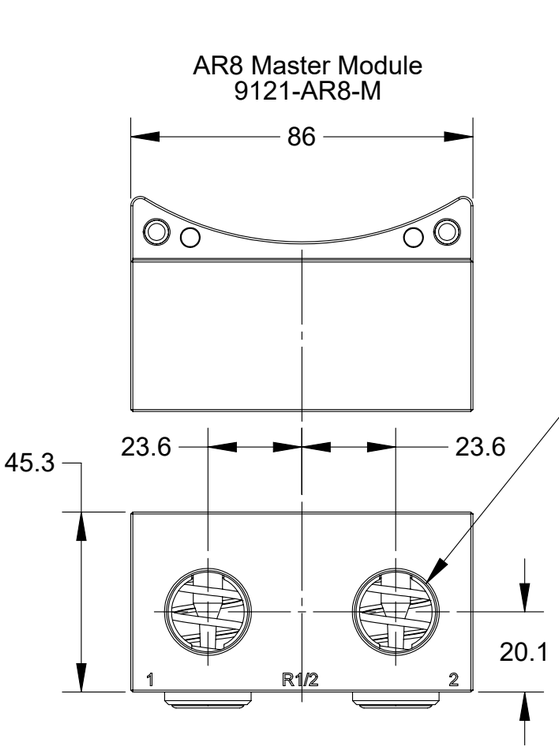

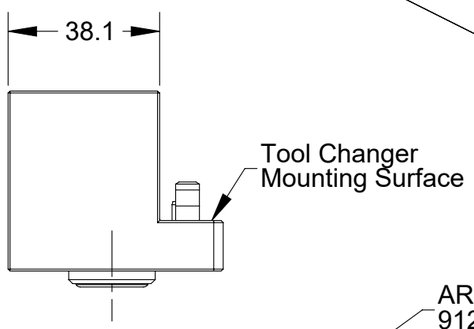

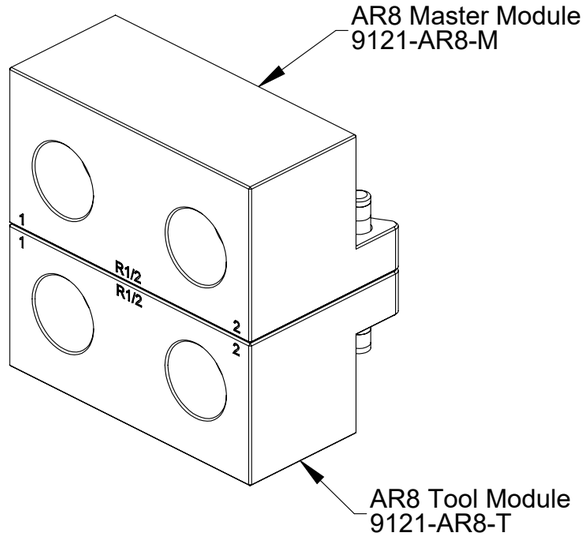

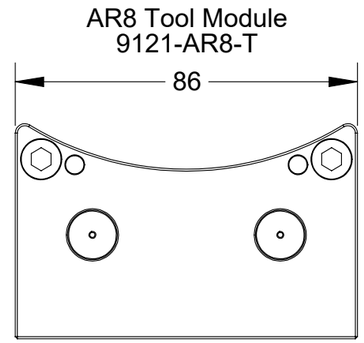

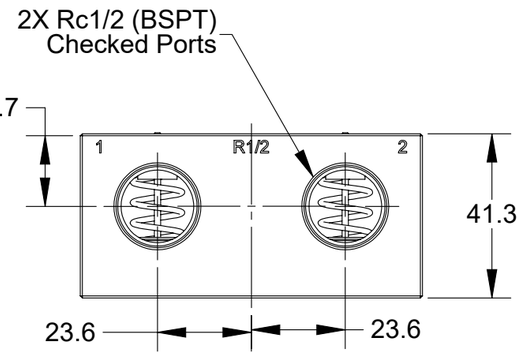

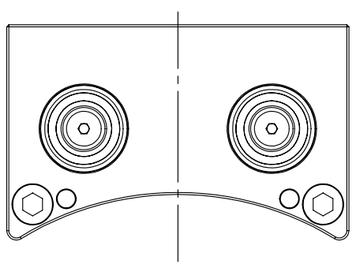

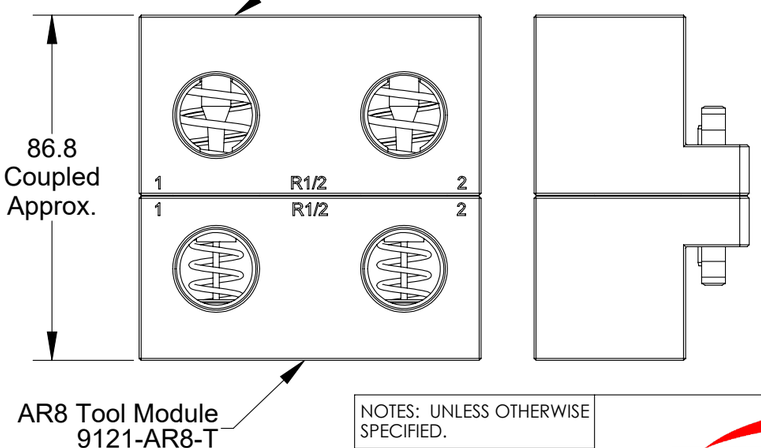

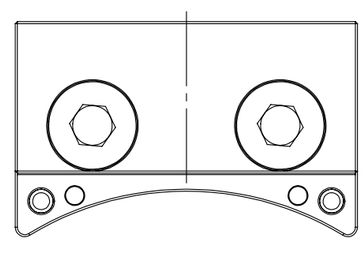

Materials of Construction:
1. Housings - Anodized Aluminum
2. Springs - Stainless Steel
3. Valve Components - Stainless Steel, PVC, & Nitrile Rubber
4. Replacement stem contains pre-applied thread locker. Use Loctite 7649 primer and Loctite 222 if reassembling with original stem.

Guidelines for Operation:
5. Filter air passed through the modules.
6. Lubricate seals periodically with NLGI-2 grease.
7. Keep mating surfaces clean and free of debris

NOTES: UNLESS OTHERWISE SPECIFIED.

DO NOT SCALE DRAWING. ALL DIMENSIONS ARE IN MILLIMETERS.

3rd ANGLE PROJECTION

ATI INDUSTRIAL AUTOMATION

1031 Goodworth Drive, Apex, NC 27539, USA
Tel: +1.919.772.0115 www.ati-ia.com
Fax: +1.919.772.8259 ISO 9001 Registered Company

PROPERTY OF ATI INDUSTRIAL AUTOMATION, INC. NOT TO BE REPRODUCED IN ANY MANNER EXCEPT ON ORDER OR WITH PRIOR WRITTEN AUTHORIZATION OF ATI.

DRAWN BY: D.Lawson-4/2/14

CHECKED BY: D.Swanson-4/2/14

PROJECT # 131121-1 SHEET 1 OF 2

TITLE: AR8 Module Drawing

SCALE	SIZE	DRAWING NUMBER	REVISION
2:3	B	9630-20-AR8	03

AR8 Master Module
(9121-AR8-M)

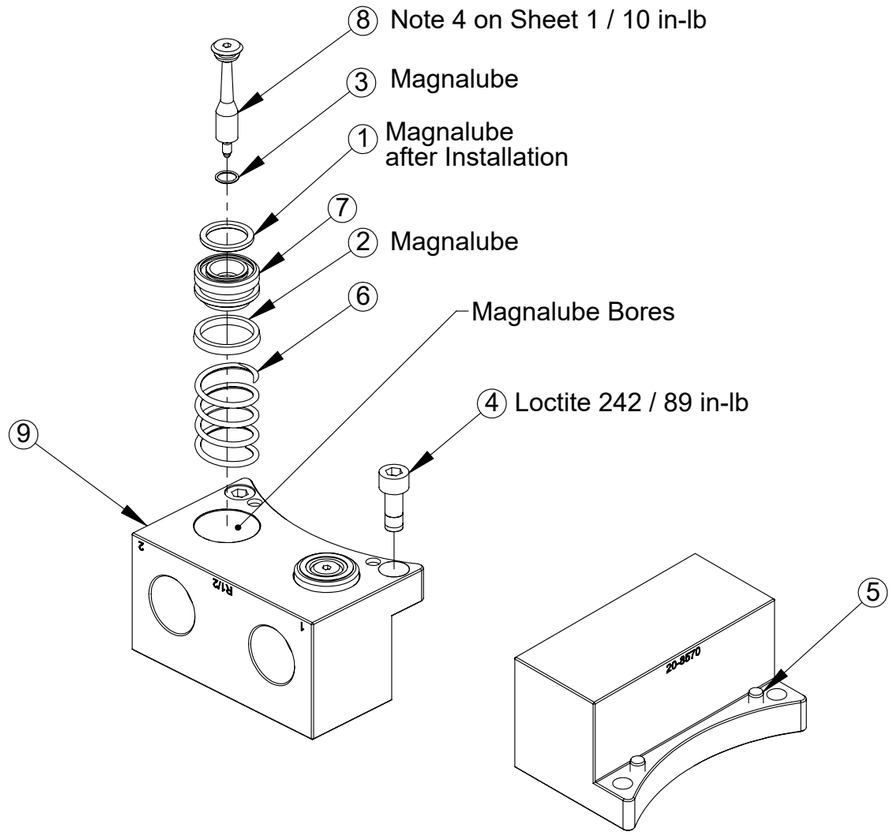

ITEM NO.	QTY.	PART NUMBER	DESCRIPTION
1	2	3410-0001065-01	O-Ring 14MM X 2MM Buna
2	2	3410-0001068-01	Mini U-Cup Seal 18mm ID x 22mm Buna
3	2	3410-0001183-01	O-Ring 6MM X 2MM Buna D90
4	2	3500-1066016-21A	M6-1 x 16mm SHCS, SS, Pre-Applied
5	2	3540-0105016-21	5mm x 16mm Dowel Pin SST
6	2	3700-20-1459	SPRING, FLUID/AIR MODULE, MASTER
7	2	3700-20-2994	Master Check Valve Piston
8	2	3700-20-8065	VALVE STEM, HIGH STRENGTH
9	1	3700-20-8570	Housing, Air, (2) Rc1/2, 3/8 Valve, Master

Notes:
Service Kit 9120-F2-M-Kit consists of (1) each of items 1, 2, 3, & 6
Service Kit 9120-F4-M-Kit consists of (1) each of items 1, 2, 3, 6, 7, & 8

AR8 Tool Module
(9121-AR8-T)

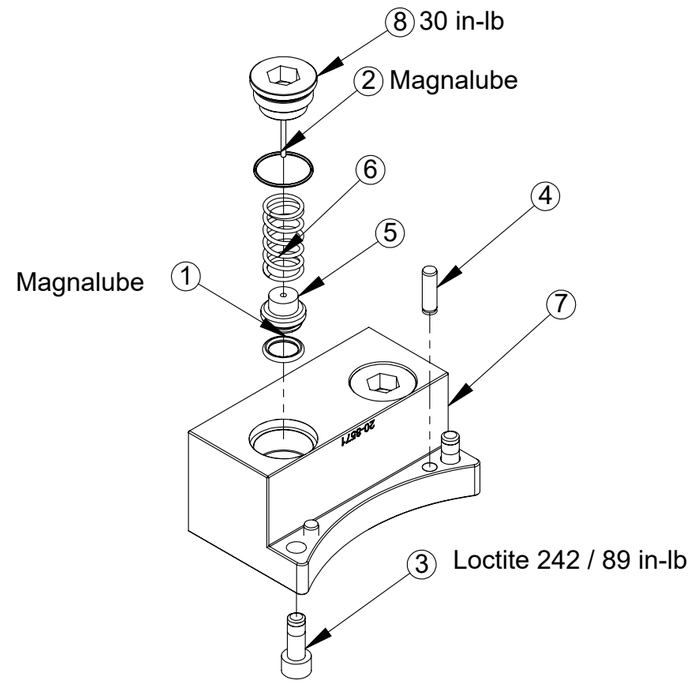

ITEM NO.	QTY.	PART NUMBER	DESCRIPTION
1	2	3410-0001067-01	O-ring, 10mm x 2mm, Buna N, Dur. 90
2	2	3410-0001284-01	O-ring, .669OD x .047 wall, 70D, Buna-N
3	2	3500-1066016-21A	M6-1 x 16mm SHCS, SS, Pre-Applied
4	2	3540-0105016-21	5mm x 16mm Dowel Pin SST
5	2	3700-20-1457	Tool Fluid/Air Check Valve Piston
6	2	3700-20-1460	SPRING, FLUID/AIR MODULE, TOOL
7	1	3700-20-8571	Housing, Air, (2) Rc1/2, 3/8 Valve, Tool
8	2	9005-20-1515	3/8" Check Port Long Plug with Dowel

Notes:
Service Kit 9120-F1-T-Kit consists of (1) each of items 1, 2, & 6
Service Kit 9120-F5-T-Kit consists of (1) each of items 1, 2, 5, 6, & 8

NOTES: UNLESS OTHERWISE SPECIFIED.

DO NOT SCALE DRAWING. ALL DIMENSIONS ARE IN MILLIMETERS.

3rd ANGLE PROJECTION

ATI INDUSTRIAL AUTOMATION
1031 Goodworth Drive, Apex, NC 27539, USA
Tel: +1.919.772.0115 www.ati-ia.com
Fax: +1.919.772.8259 ISO 9001 Registered Company

PROPERTY OF ATI INDUSTRIAL AUTOMATION, INC. NOT TO BE REPRODUCED IN ANY MANNER EXCEPT ON ORDER OR WITH PRIOR WRITTEN AUTHORIZATION OF ATI.

DRAWN BY: D.Lawson-4/2/14
CHECKED BY: D.Swanson-4/2/14
PROJECT # 131121-1 SHEET 2 OF 2

TITLE: AR8 Module Drawing

SCALE	SIZE	DRAWING NUMBER	REVISION
1:2	B	9630-20-AR8	03