Rev.	Description	Initiator	Date
08	ECO 21749: Updated to show new Tool window, injection molded.	BAW	2/27/2026

DT2 Master Module (9121-DT2-M)

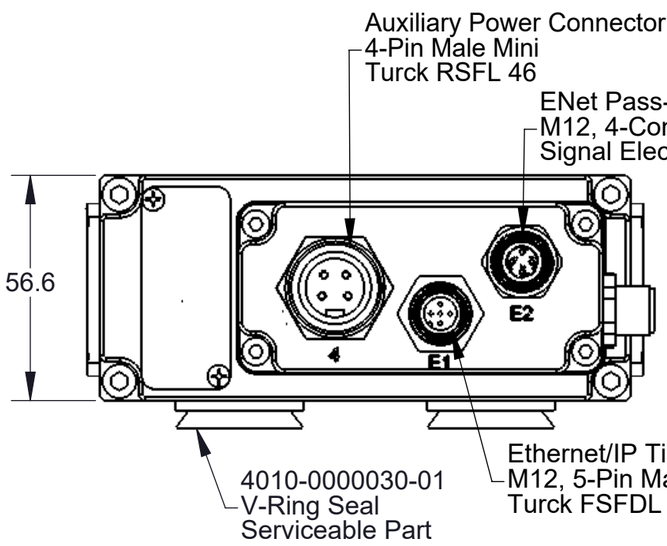

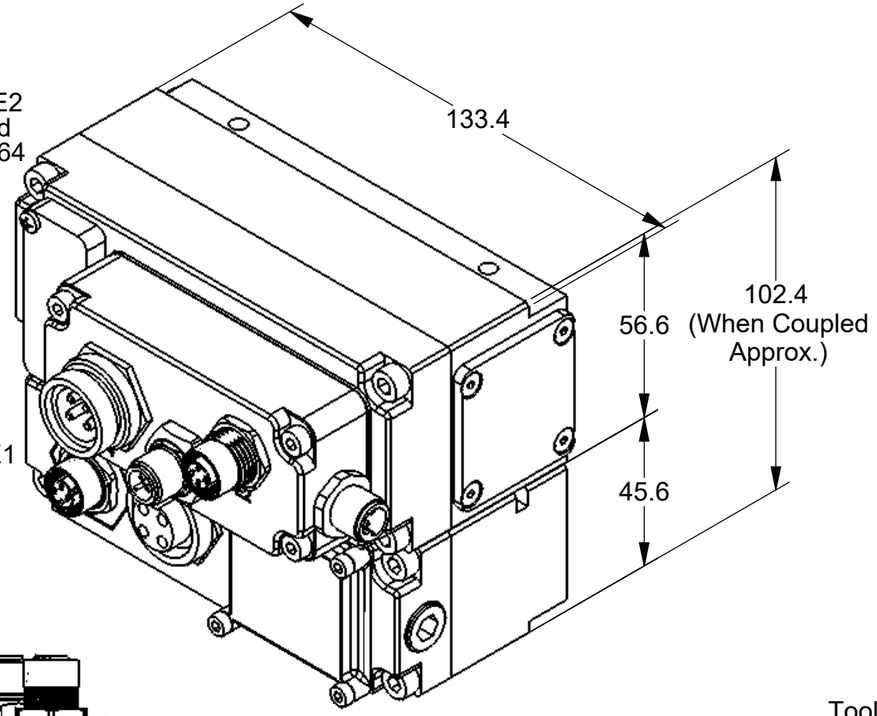

DT2 Tool Module (9121-DT2-T)

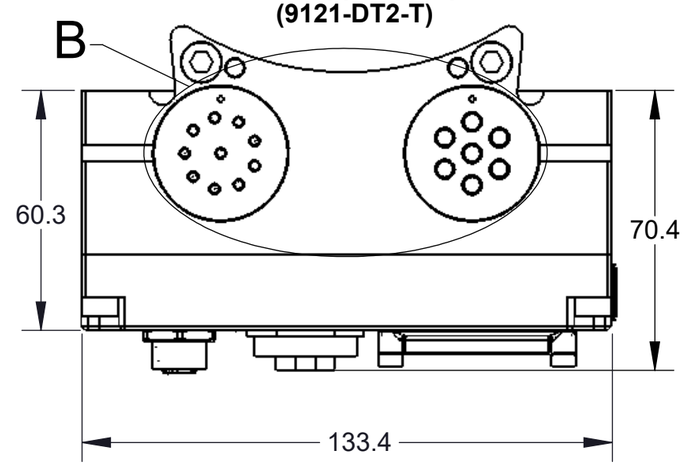

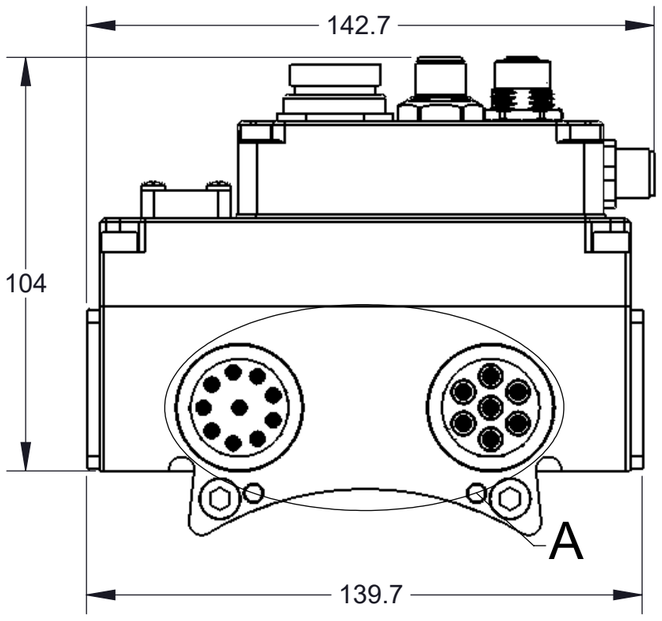

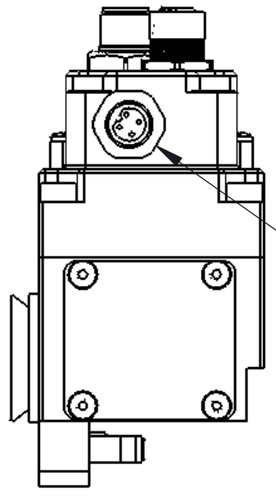

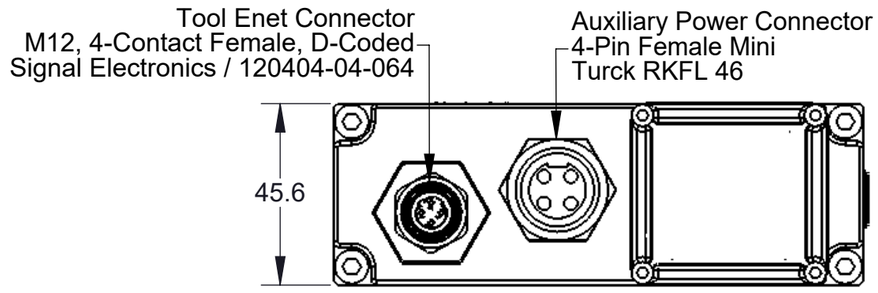

Notes:
1. Reference the manual for information related to Arc Prevention control and Ethernet quick-connect signals.
2. Connectors are oriented as shown unless otherwise specified.
3. Pin Block signal assignments are shown on Sheet 2.
4. Connector pin-outs are shown on Sheet 3.
5. Electrical schematic of DT2 Master and Tool is shown on Sheet 4.

NOTES: UNLESS OTHERWISE SPECIFIED.

DO NOT SCALE DRAWING. ALL DIMENSIONS ARE IN MILLIMETERS.

3rd ANGLE PROJECTION

ATI INDUSTRIAL AUTOMATION

1031 Goodworth Drive, Apex, NC 27539, USA
Tel: +1.919.772.0115 www.ati-ia.com
Fax: +1.919.772.8259 ISO 9001 Registered Company

PROPERTY OF ATI INDUSTRIAL AUTOMATION, INC. NOT TO BE REPRODUCED IN ANY MANNER EXCEPT ON ORDER OR WITH PRIOR WRITTEN AUTHORIZATION OF ATI.

DRAWN BY: W. Berrocal, 12/30/11

CHECKED BY: A. Strotzer, 1/17/12

PROJECT # 111219-2 SHEET 1 OF 4

TITLE: DT2 Module Drawing

SCALE	SIZE	DRAWING NUMBER	REVISION
1:2	B	9630-20-DT2	08

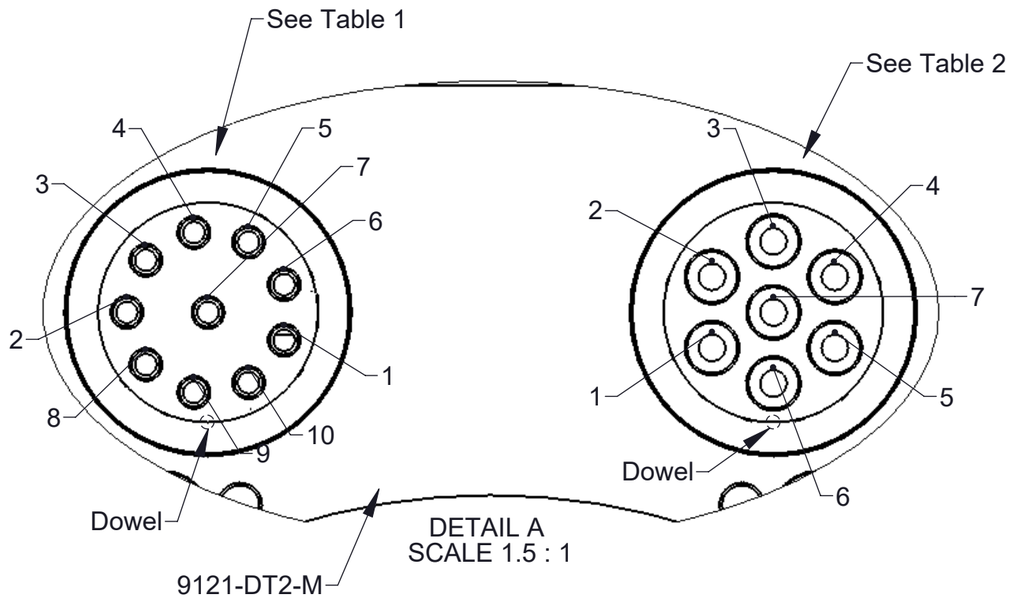

DETAIL A
SCALE 1.5 : 1

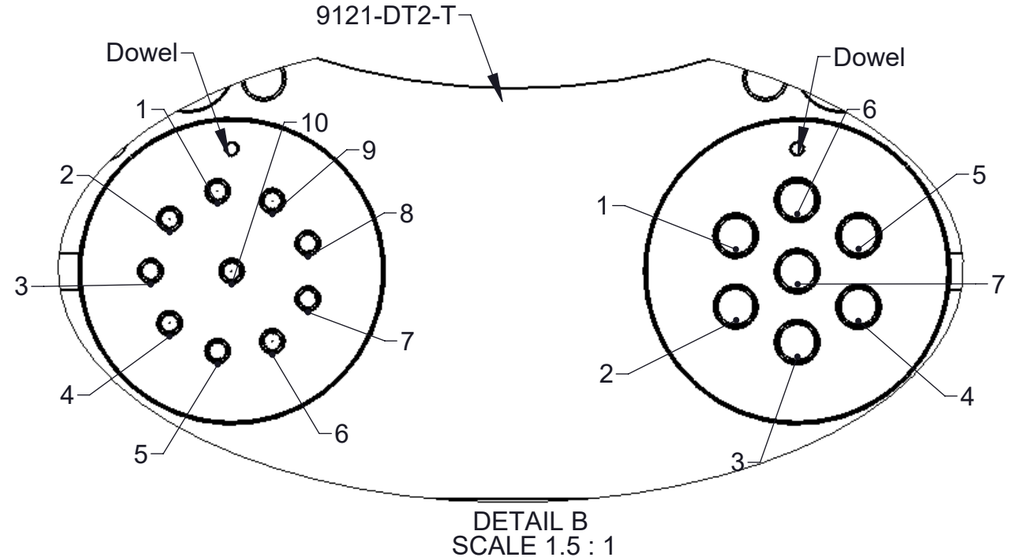

DETAIL B
SCALE 1.5 : 1

Table 1 10-Pin Block Pin Assignment	
1	N/C
2	Tx+
3	Tx-
4	OUT
5	IN (24V)
6	N/C
7	Rx+
8	Rx-
9	N/C
10	E-Net Shield

Table 2 7-Pin Block Pin Assignment	
1	0V Unswitched
2	Arc Switch Enable (0V Unsw.)
3	0V Switched
4	24V Switched
5	N/C
6	24V Unswitched
7	N/C

NOTES: UNLESS OTHERWISE SPECIFIED.

DO NOT SCALE DRAWING. ALL DIMENSIONS ARE IN MILLIMETERS.

3rd ANGLE PROJECTION

INDUSTRIAL AUTOMATION

1031 Goodworth Drive, Apex, NC 27539, USA
Tel: +1.919.772.0115 www.ati-ia.com
Fax: +1.919.772.8259 ISO 9001 Registered Company

PROPERTY OF ATI INDUSTRIAL AUTOMATION, INC. NOT TO BE REPRODUCED IN ANY MANNER EXCEPT ON ORDER OR WITH PRIOR WRITTEN AUTHORIZATION OF ATI.

DRAWN BY: W. Berrocal, 12/30/11

CHECKED BY: A. Strotzer, 1/17/12

PROJECT # 111219-2 SHEET 2 OF 4

TITLE: DT2 Module Drawing

SCALE	SIZE	DRAWING NUMBER	REVISION
1:2	B	9630-20-DT2	08

Table 3 Auxiliary Power Connector	
1	Switched Aux V+
2	Unswitched Aux V+
3	Unswitched Aux V-
4	Switched Aux V-

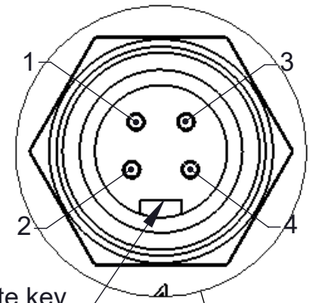

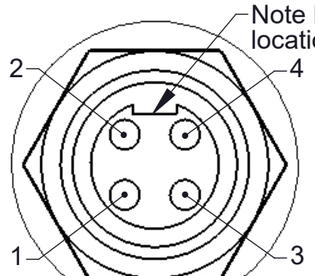

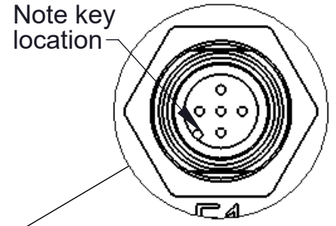

Table 6 Ethernet/IP Quick Connect Signal	
1	IN (24V)
2	N/C
3	N/C
4	OUT
5	N/C

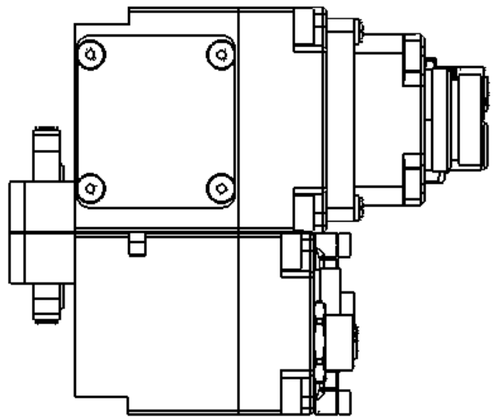

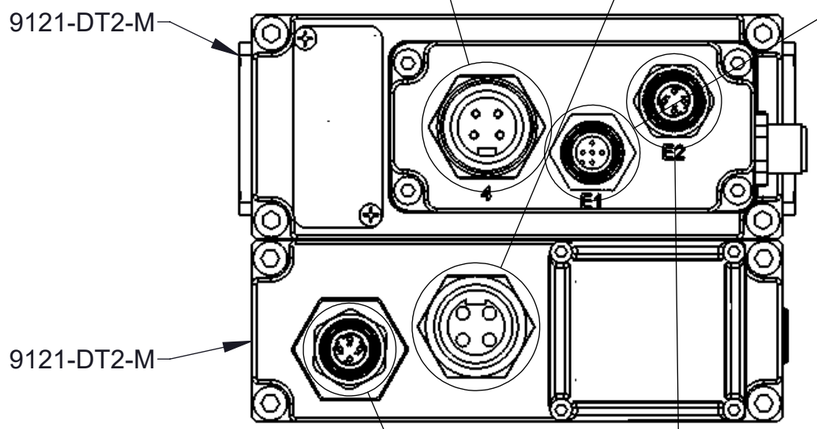

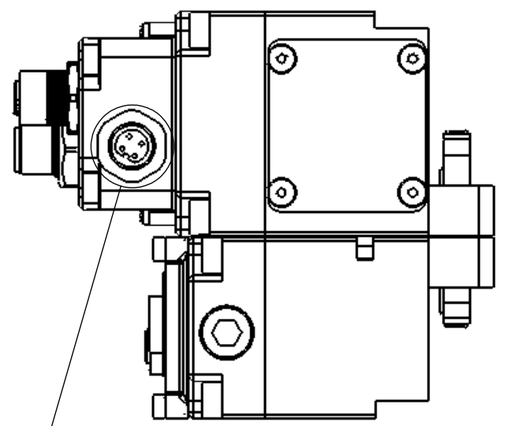

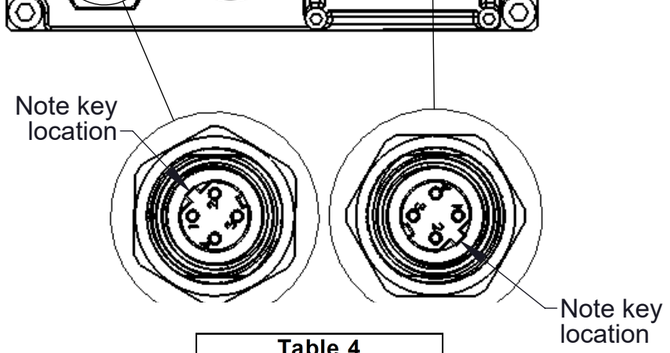

Table 4 EtherNet Connector	
1	Tx+
2	Rx+
3	Tx-
4	Rx-

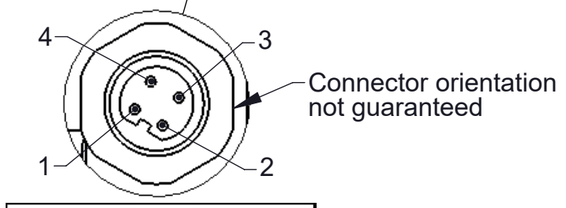

Table 5 Arc Prevention Control Connector	
1	N/C
2	ON
3	GND
4	OFF

NOTES: UNLESS OTHERWISE SPECIFIED.

DO NOT SCALE DRAWING. ALL DIMENSIONS ARE IN MILLIMETERS.

3rd ANGLE PROJECTION

ATI INDUSTRIAL AUTOMATION

1031 Goodworth Drive, Apex, NC 27539, USA
Tel: +1.919.772.0115 www.ati-ia.com
Fax: +1.919.772.8259 ISO 9001 Registered Company

PROPERTY OF ATI INDUSTRIAL AUTOMATION, INC. NOT TO BE REPRODUCED IN ANY MANNER EXCEPT ON ORDER OR WITH PRIOR WRITTEN AUTHORIZATION OF ATI.

DRAWN BY: W. Berrocal, 12/30/11

CHECKED BY: A. Strotzer, 1/17/12

PROJECT # 111219-2 SHEET 3 OF 4

TITLE: DT2 Module Drawing

SCALE	SIZE	DRAWING NUMBER	REVISION
1:2	B	9630-20-DT2	08

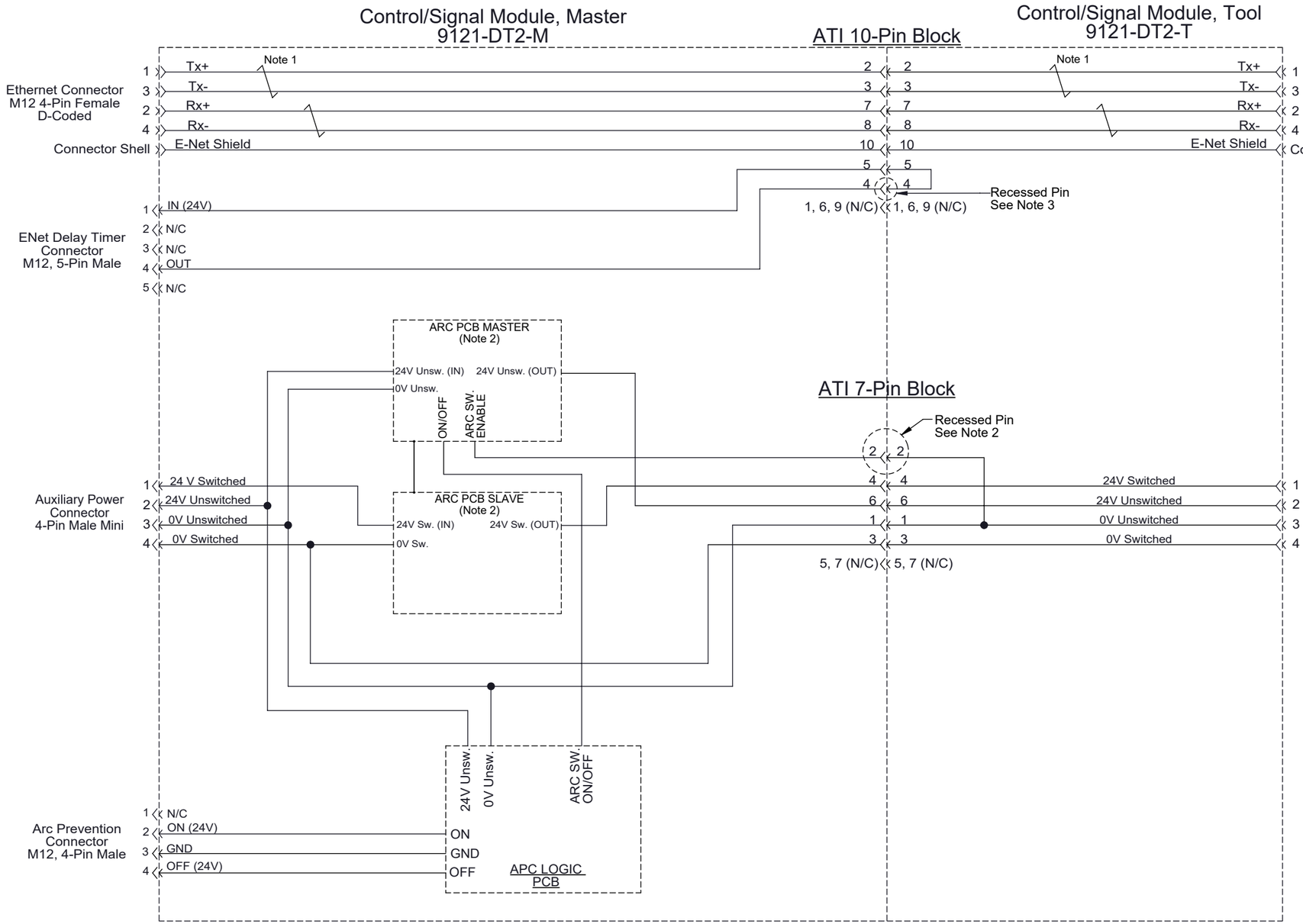

Schematic Notes:

1. Indicated wire pairs are twisted.
2. The Arc Prevention Circuits turn off Switched V+ and Unswitched V+ during coupling and uncoupling of the Master and Tool. The switching function is controlled by the ON and OFF 24V signals from the 4-Pin Arc Prevention Control Connector. The Arc Switch Enable signal is transmitted through a recessed pin in the Tool side Pin Block. This ensures that all of the spring probes and contact pins are touching when power is turned on. Refer to the product manual for additional information.
3. The 'IN (24V)' output from the EtherNet/IP controller is routed through the tool-side over a recessed pin and back to the controller. When this signal is active the controller can turn the Arc Prevention Circuit on and start the internal delay timer.
4. The power circuit is rated to 8A, 12-30VDC at Input and Output.
5. The ethernet circuit is rated to 2A, 60VDC maximum.

NOTES: UNLESS OTHERWISE SPECIFIED.

DO NOT SCALE DRAWING. ALL DIMENSIONS ARE IN MILLIMETERS.

3rd ANGLE PROJECTION

ATI INDUSTRIAL AUTOMATION

1031 Goodworth Drive, Apex, NC 27539, USA
Tel: +1.919.772.0115 www.ati-ia.com
Fax: +1.919.772.8259 ISO 9001 Registered Company

PROPERTY OF ATI INDUSTRIAL AUTOMATION, INC. NOT TO BE REPRODUCED IN ANY MANNER EXCEPT ON ORDER OR WITH PRIOR WRITTEN AUTHORIZATION OF ATI.

DRAWN BY: W. Berrocal, 12/30/11

CHECKED BY: A. Strotzer, 1/17/12

PROJECT # 111219-2 SHEET 4 OF 4

TITLE: DT2 Module Drawing

SCALE	SIZE	DRAWING NUMBER	REVISION
1:1	B	9630-20-DT2	08