REV.	DESCRIPTION	INITIATOR	DATE
04P	REPLACED JN2 CONNECTOR WITH SQUARE FLANGE VERSION. REPLACED TOOL MODULE CONNECTORS WITH HARTING CONNECTORS. CORRECTED CIRCUIT RATING BASED ON 120 OHM TSP CABLE.	DK	6/27/2023
05	ADDED TORQUE VALUE TO GUARD ASSEMBLY SCREWS ON SHEET 2. ADMINISTRATIVE EDITS TO SCHEMATIC. PRODUCTION RELEASED.	DK	8/23/2023

" DANGER!" - Electrical Shock Hazard

This module has a Voltage of 50V or greater, NO contact should be attempted before removing power. This especially includes separation or insertion of the mating connectors or any contact with the tool changer or its components."

9121-EF64-M Master Module

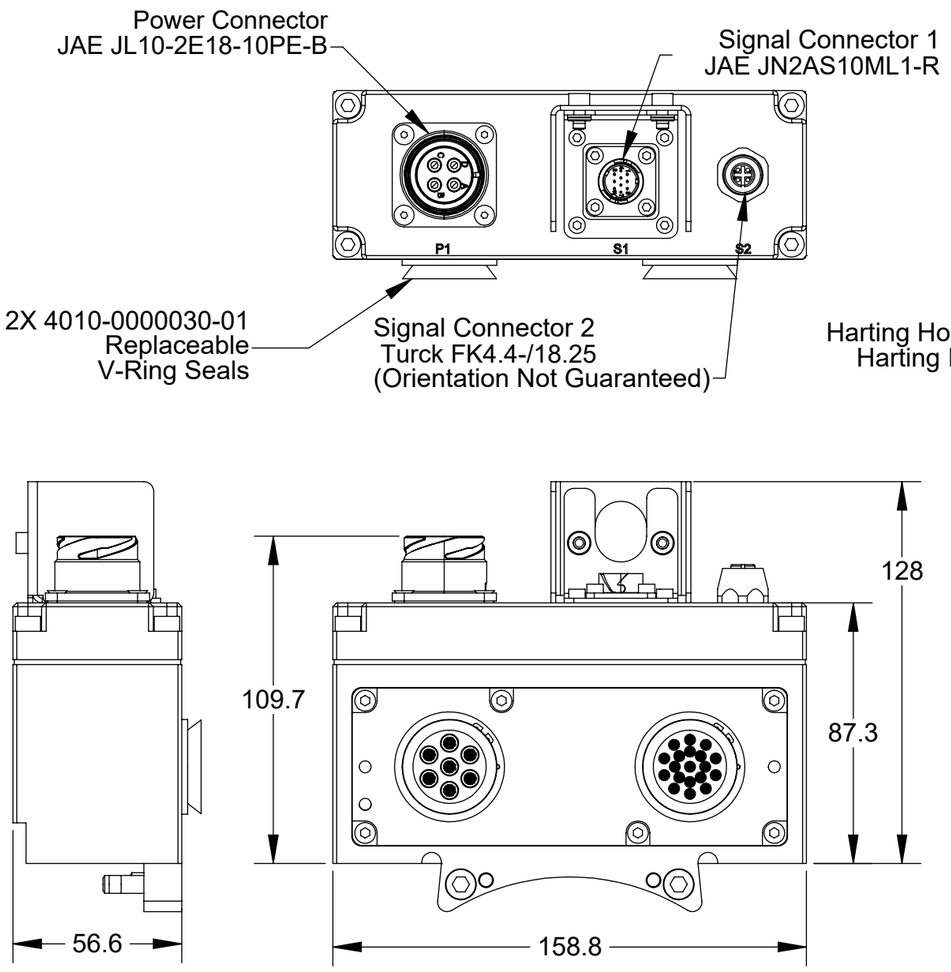

9121-EF64-T Tool Module

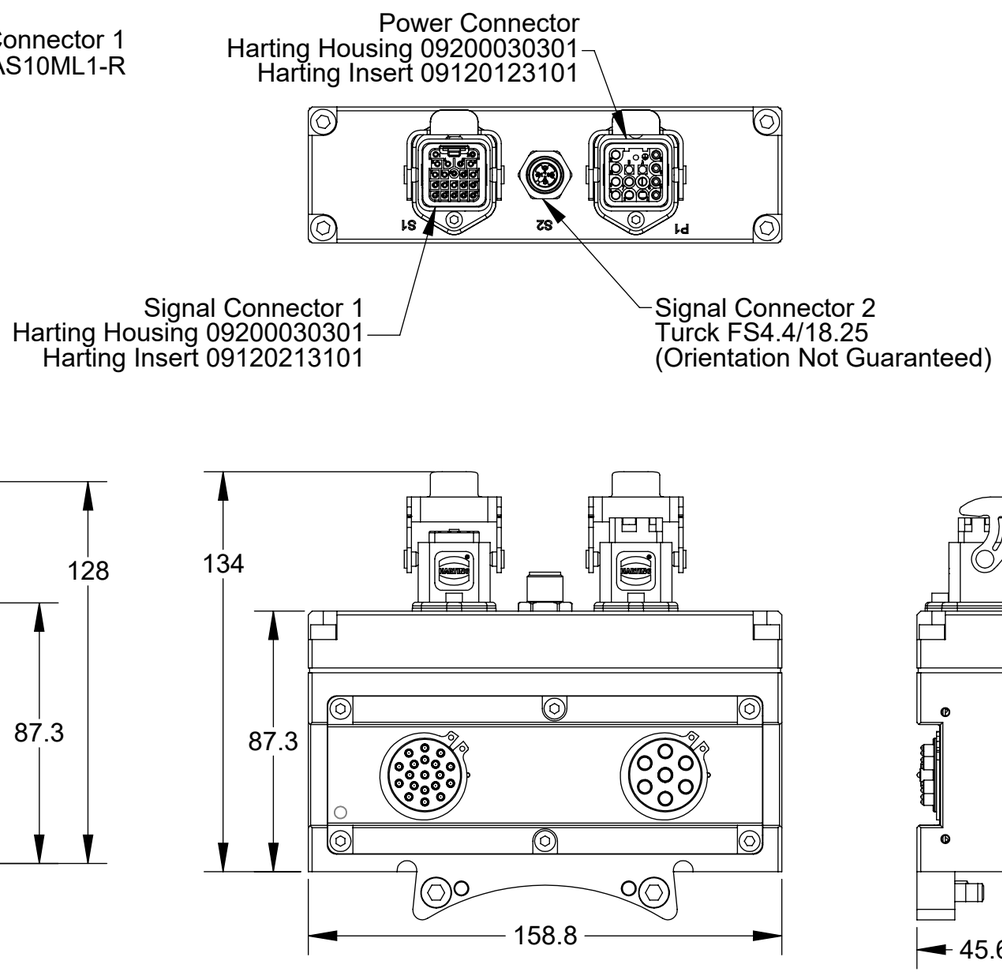

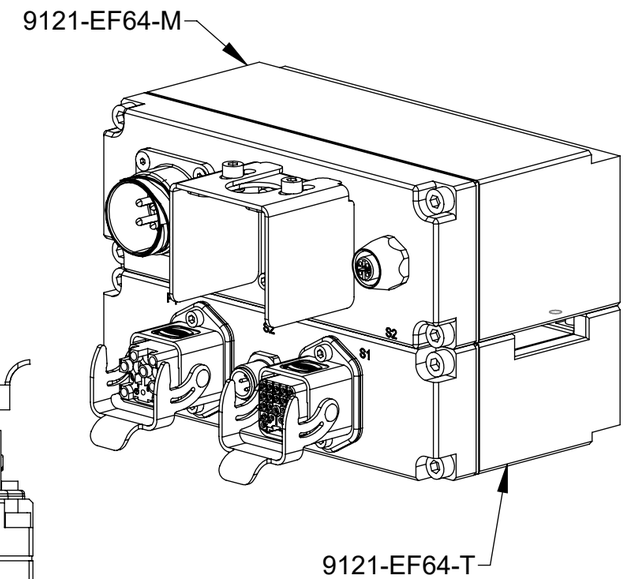

Notes:
1. Do not couple or uncouple the servo modules unless electrical power has been disconnected and discharged both upstream and downstream from the modules.
2. See Sheet 2 for additional details regarding overall dimension with guards installed.
3. See Sheets 3 and 4 for Customer Interface information.
4. See Sheet 5 for module wiring diagram and electrical rating.

NOTES: UNLESS OTHERWISE SPECIFIED.

DO NOT SCALE DRAWING. ALL DIMENSIONS ARE IN MILLIMETERS.

3rd ANGLE PROJECTION

1031 Goodworth Drive, Apex, NC 27539, USA
Tel: +1.919.772.0115 www.ati-ia.com
Fax: +1.919.772.8259 ISO 9001 Registered Company

PROPERTY OF ATI INDUSTRIAL AUTOMATION, INC. NOT TO BE REPRODUCED IN ANY MANNER EXCEPT ON ORDER OR WITH PRIOR WRITTEN AUTHORIZATION OF ATI.

DRAWN BY: S. Blackwelder, 01/17/2023

CHECKED BY: M. Newell, 02/04/2023

PROJECT # 221004-1 SHEET 1 OF 5

TITLE: EF64 Servo Module Customer Drawing

SCALE	SIZE	DRAWING NUMBER	REVISION
1:2	B	9630-20-EF64	05

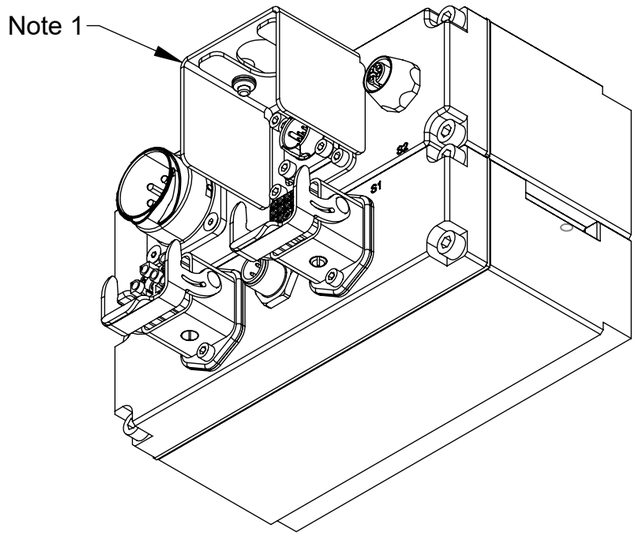

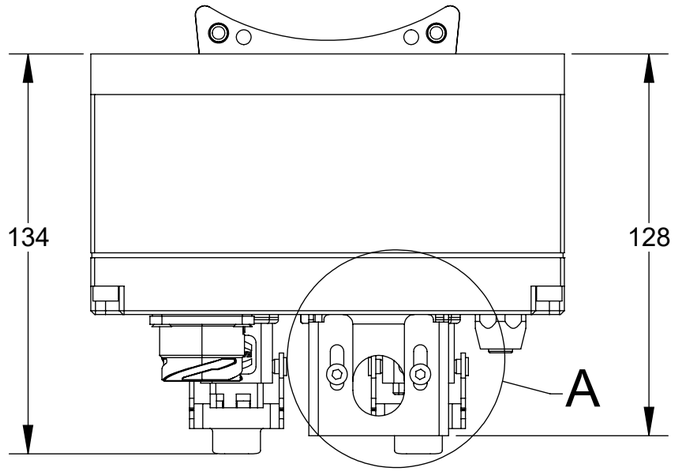

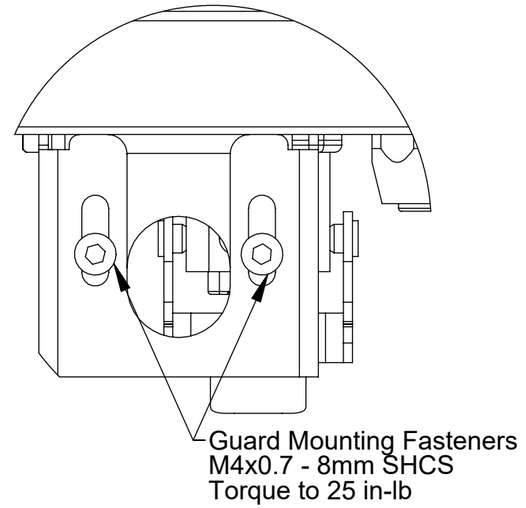

DETAIL A
SCALE 1 : 1

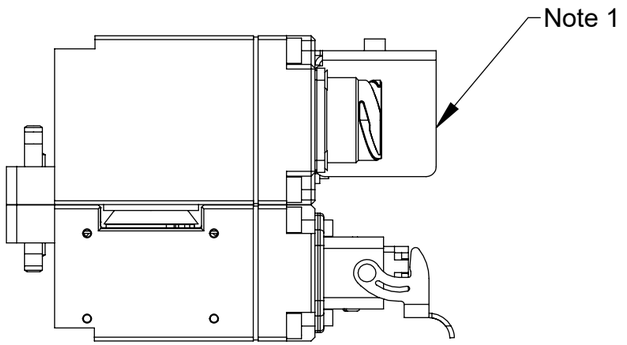

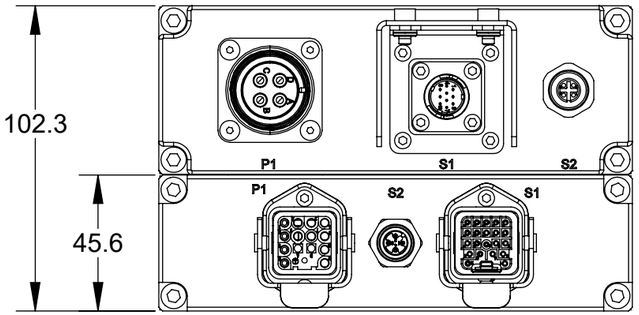

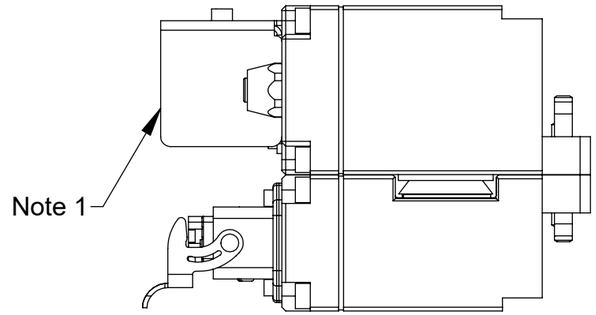

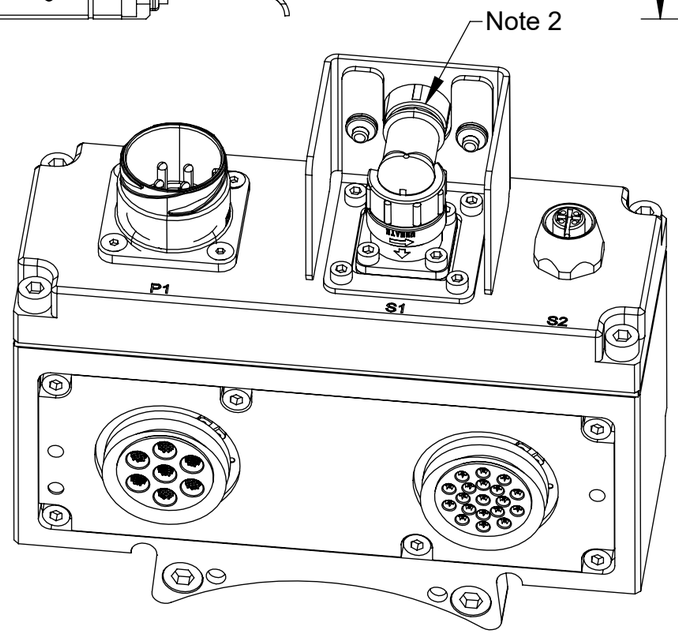

Notes:
1. Protective, Anti-Tamper Encoder Connector Guard, Bracket Assembly
2. JN2FS10SL1-R Angle Plug shown for reference.

NOTES: UNLESS OTHERWISE SPECIFIED.

DO NOT SCALE DRAWING. ALL DIMENSIONS ARE IN MILLIMETERS.

3rd ANGLE PROJECTION

ATI INDUSTRIAL AUTOMATION

1031 Goodworth Drive, Apex, NC 27539, USA
Tel: +1.919.772.0115 www.ati-ia.com
Fax: +1.919.772.8259 ISO 9001 Registered Company

PROPERTY OF ATI INDUSTRIAL AUTOMATION, INC. NOT TO BE REPRODUCED IN ANY MANNER EXCEPT ON ORDER OR WITH PRIOR WRITTEN AUTHORIZATION OF ATI.

DRAWN BY: S. Blackwelder, 01/17/2023

CHECKED BY: M. Newell, 02/04/2023

PROJECT # 221004-1 SHEET 2 OF 5

TITLE: EF64 Servo Module Customer Drawing

SCALE	SIZE	DRAWING NUMBER	REVISION
1:2	B	9630-20-EF64	05

9121-EF64-M

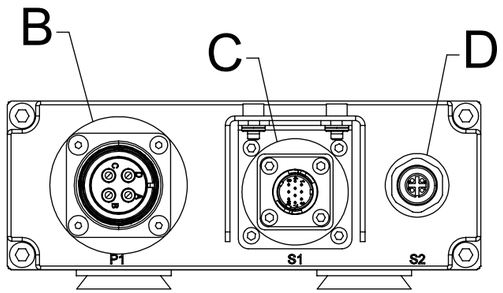

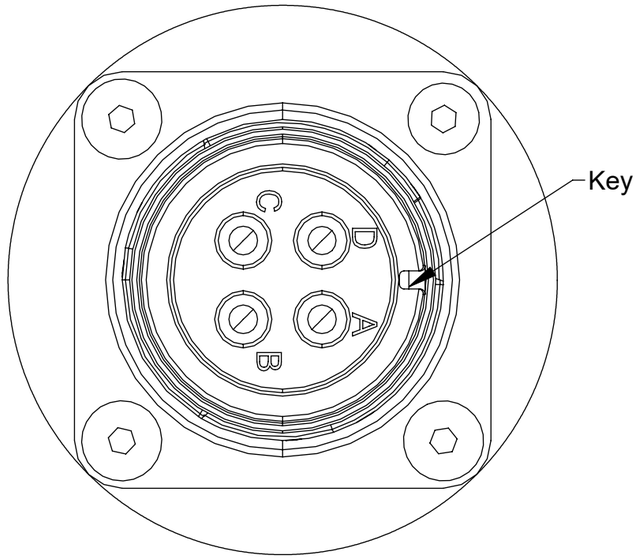

DETAIL B
SCALE 2 : 1

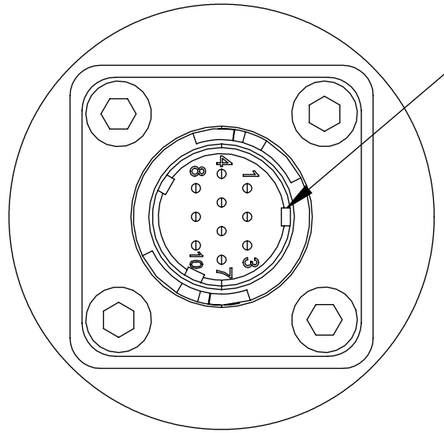

DETAIL C
SCALE 2 : 1

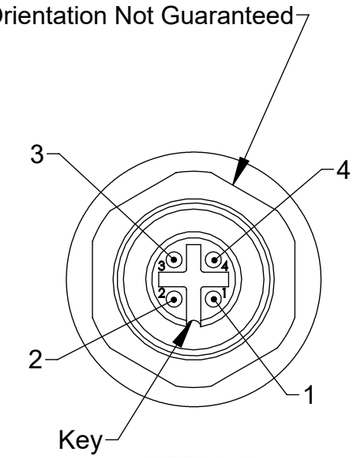

DETAIL D
SCALE 2 : 1

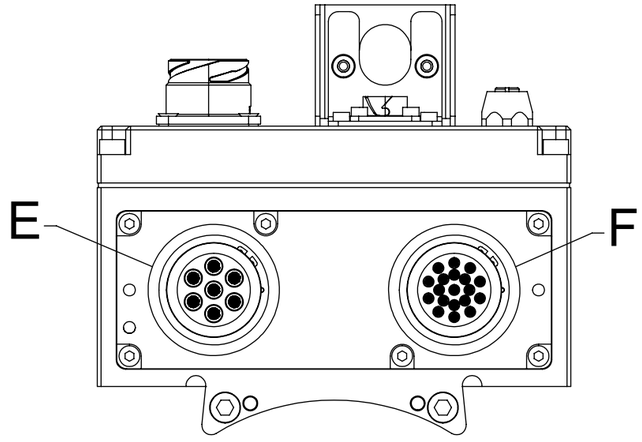

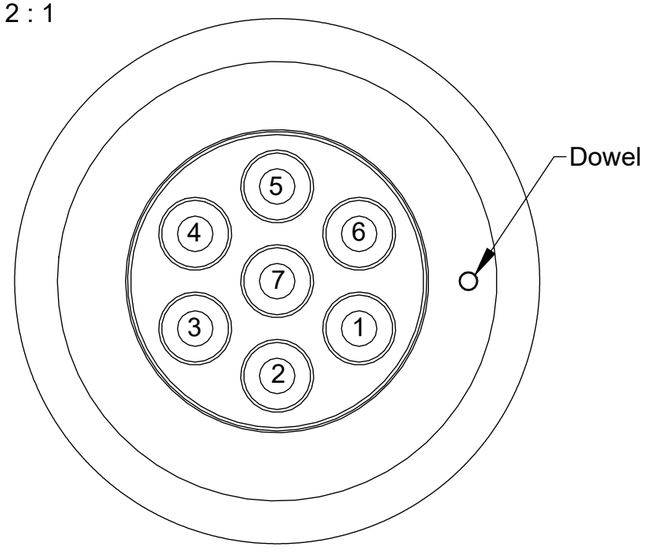

DETAIL E
SCALE 2 : 1

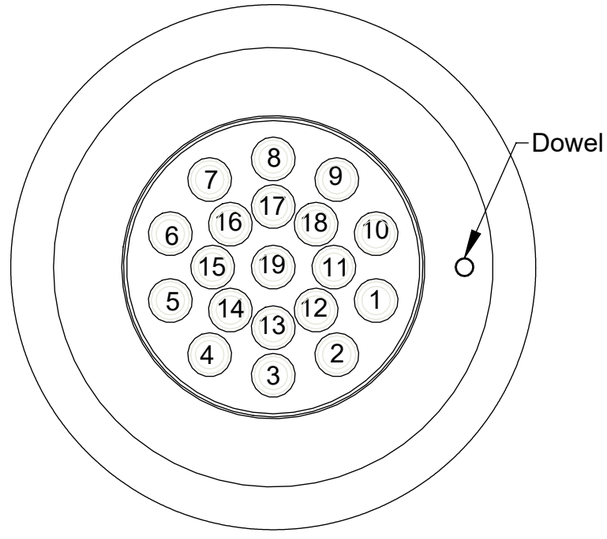

DETAIL F
SCALE 2 : 1

NOTES:
1. Retaining rings hidden in Detail Views E and F for dowel pin clarity.

NOTES: UNLESS OTHERWISE SPECIFIED.

DO NOT SCALE DRAWING. ALL DIMENSIONS ARE IN MILLIMETERS.

3rd ANGLE PROJECTION

ATI INDUSTRIAL AUTOMATION

1031 Goodworth Drive, Apex, NC 27539, USA
Tel: +1.919.772.0115 www.ati-ia.com
Fax: +1.919.772.8259 ISO 9001 Registered Company

PROPERTY OF ATI INDUSTRIAL AUTOMATION, INC. NOT TO BE REPRODUCED IN ANY MANNER EXCEPT ON ORDER OR WITH PRIOR WRITTEN AUTHORIZATION OF ATI.

DRAWN BY: S. Blackwelder, 01/17/2023

CHECKED BY: M. Newell, 02/04/2023

PROJECT # 221004-1 SHEET 3 OF 5

TITLE: EF64 Servo Module Customer Drawing

SCALE	SIZE	DRAWING NUMBER	REVISION
1:2	B	9630-20-EF64	05

9121-EF64-T

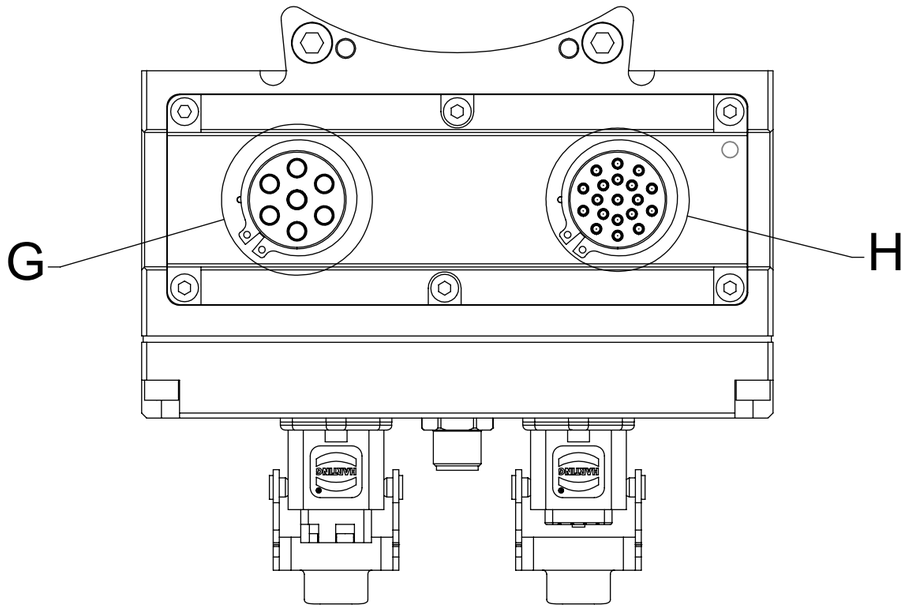

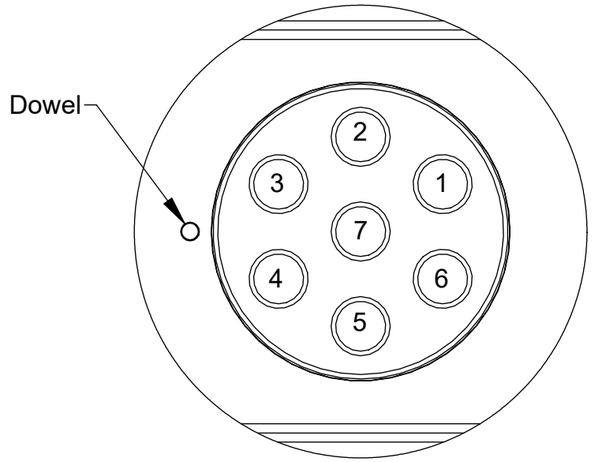

DETAIL G
SCALE 2 : 1

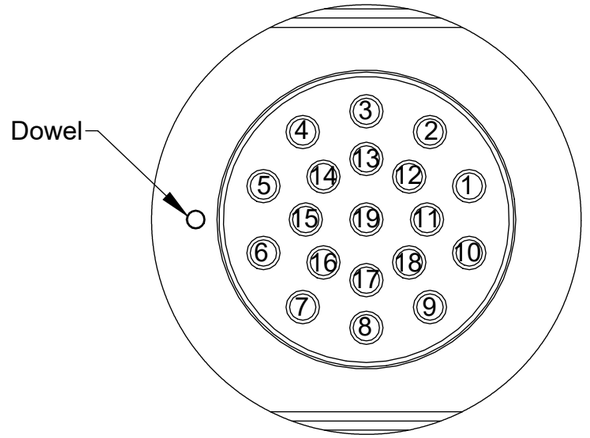

DETAIL H
SCALE 2 : 1

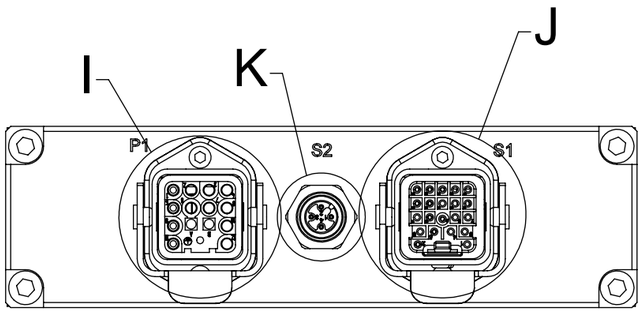

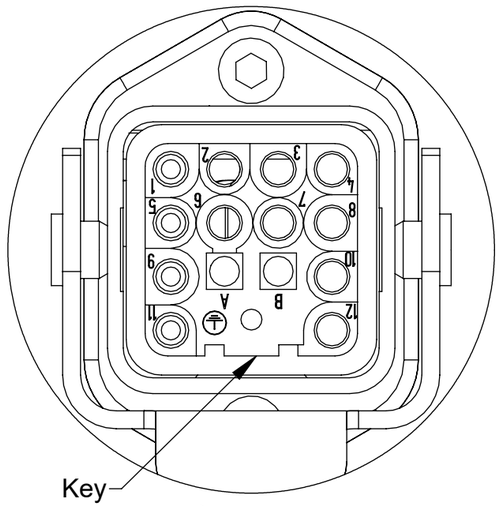

DETAIL I
SCALE 2 : 1

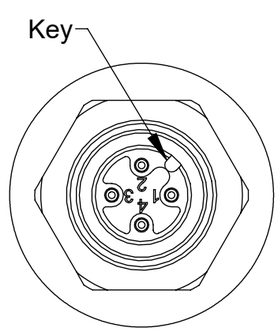

DETAIL K
SCALE 2 : 1

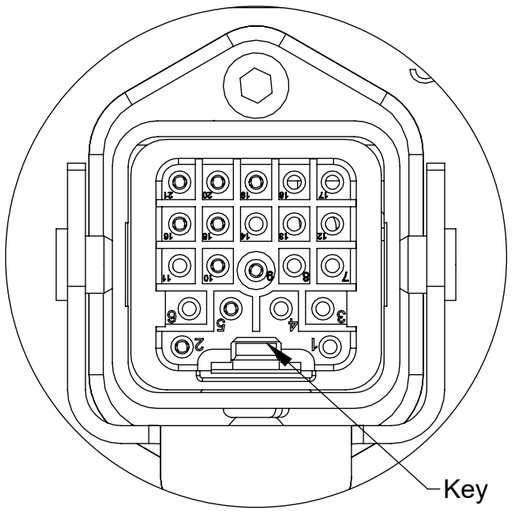

DETAIL J
SCALE 2 : 1

NOTES:
1. Retaining rings hidden in Detail Views G and H for dowel pin clarity.

NOTES: UNLESS OTHERWISE SPECIFIED.

DO NOT SCALE DRAWING. ALL DIMENSIONS ARE IN MILLIMETERS.

3rd ANGLE PROJECTION

ATI INDUSTRIAL AUTOMATION

1031 Goodworth Drive, Apex, NC 27539, USA
Tel: +1.919.772.0115 www.ati-ia.com
Fax: +1.919.772.8259 ISO 9001 Registered Company

PROPERTY OF ATI INDUSTRIAL AUTOMATION, INC. NOT TO BE REPRODUCED IN ANY MANNER EXCEPT ON ORDER OR WITH PRIOR WRITTEN AUTHORIZATION OF ATI.

DRAWN BY: S. Blackwelder, 01/17/2023

CHECKED BY: M. Newell, 02/04/2023

PROJECT # 221004-1 SHEET 4 OF 5

TITLE: EF64 Servo Module Customer Drawing

SCALE	SIZE	DRAWING NUMBER	REVISION
1:2	B	9630-20-EF64	05

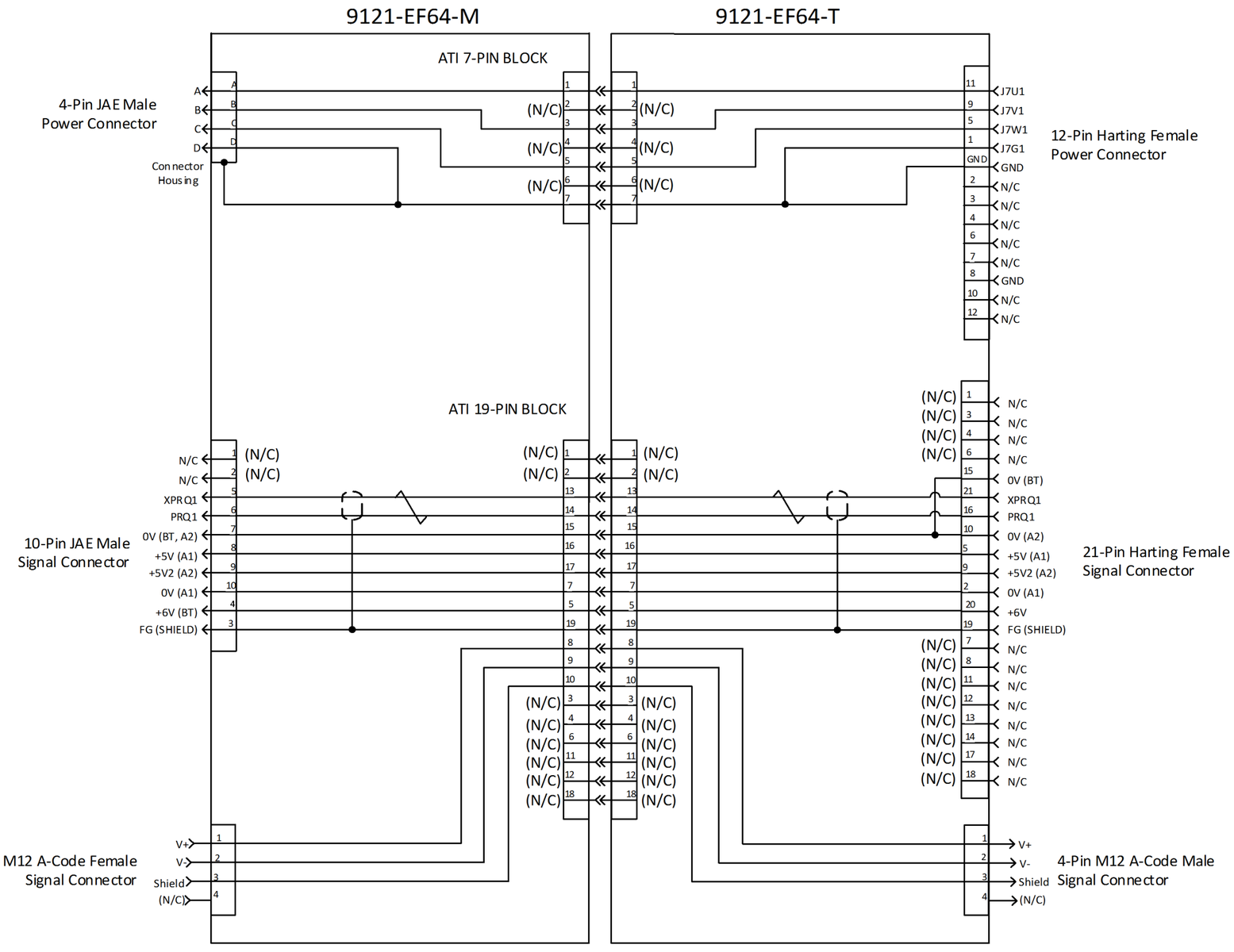

Notes:

1. Pin 7 of the 7 Pin Block are the first-to-make, last-to-break.
2. Pin 19 of the 19 Pin Block are the first-to-make, last-to-break.
3. The indicated wire pairs are twisted and shielded.
4. Power circuit rating: 10A / 400Vmax
5. Singal 1 circuit rating (cable): 2.1A / 50Vmax
6. Signal 1 circuit rating (discrete wire): 3A / 50VMax
7. Signal 2 circuit rating: 4A / 250Vmax

NOTES: UNLESS OTHERWISE SPECIFIED.

DO NOT SCALE DRAWING. ALL DIMENSIONS ARE IN MILLIMETERS.

3rd ANGLE PROJECTION

ATI INDUSTRIAL AUTOMATION

1031 Goodworth Drive, Apex, NC 27539, USA
Tel: +1.919.772.0115 www.ati-ia.com
Fax: +1.919.772.8259 ISO 9001 Registered Company

PROPERTY OF ATI INDUSTRIAL AUTOMATION, INC. NOT TO BE REPRODUCED IN ANY MANNER EXCEPT ON ORDER OR WITH PRIOR WRITTEN AUTHORIZATION OF ATI.

DRAWN BY: S. Blackwelder, 01/17/2023

CHECKED BY: M. Newell, 02/04/2023

PROJECT # 221004-1 SHEET 5 OF 5

TITLE: EF64 Servo Module Customer Drawing

SCALE	SIZE	DRAWING NUMBER	REVISION
1:2	B	9630-20-EF64	05