Rev.	Description	Initiator	Date
03	ECO 22132; 3700-20-8065 was 3700-20-2996	LJH	5/13/2025

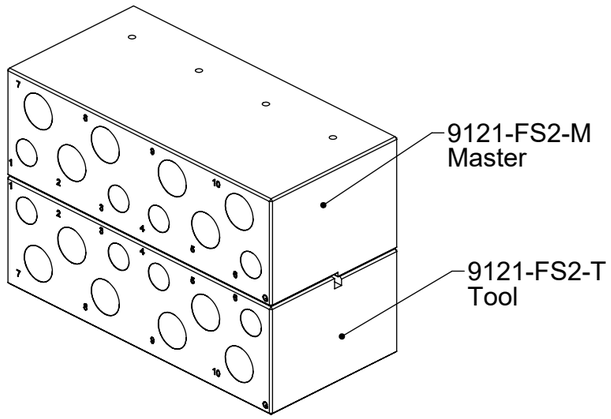

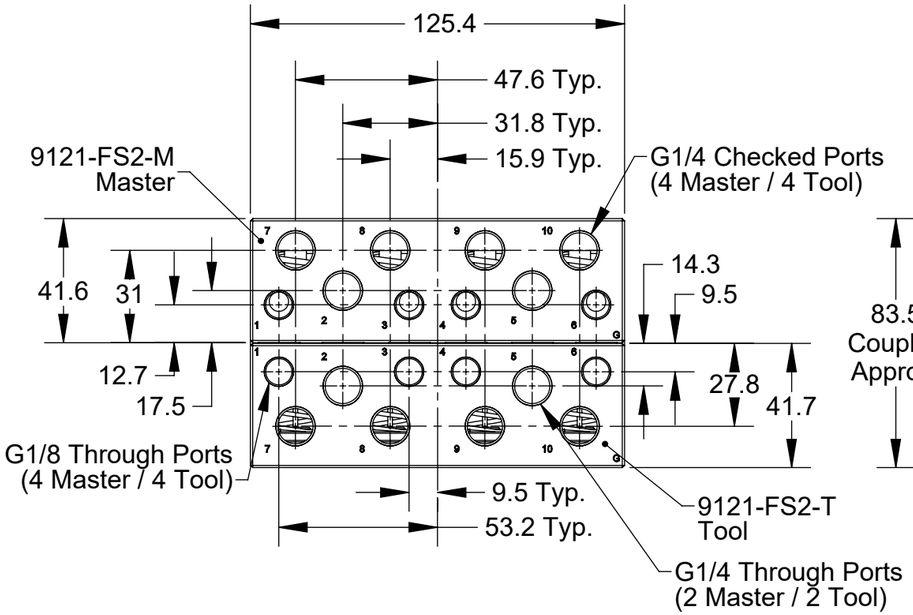

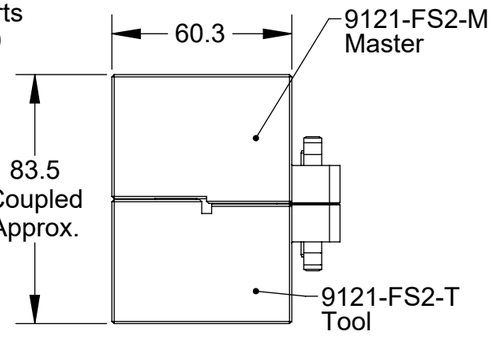

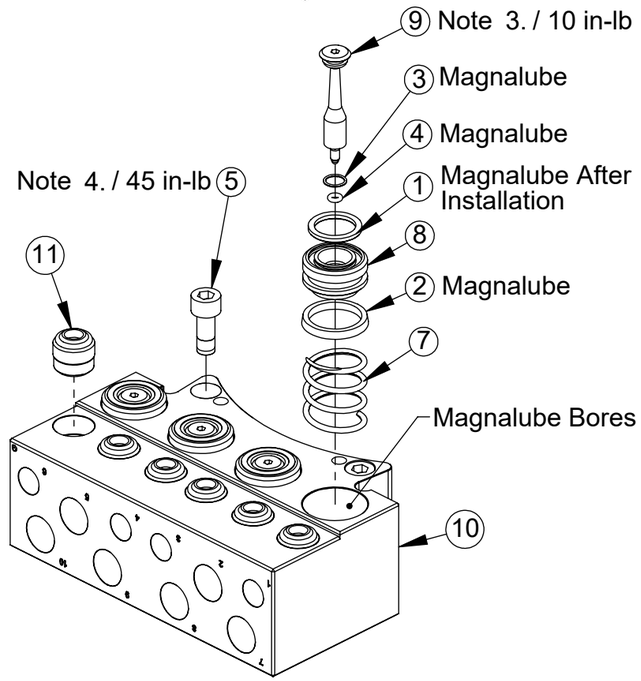

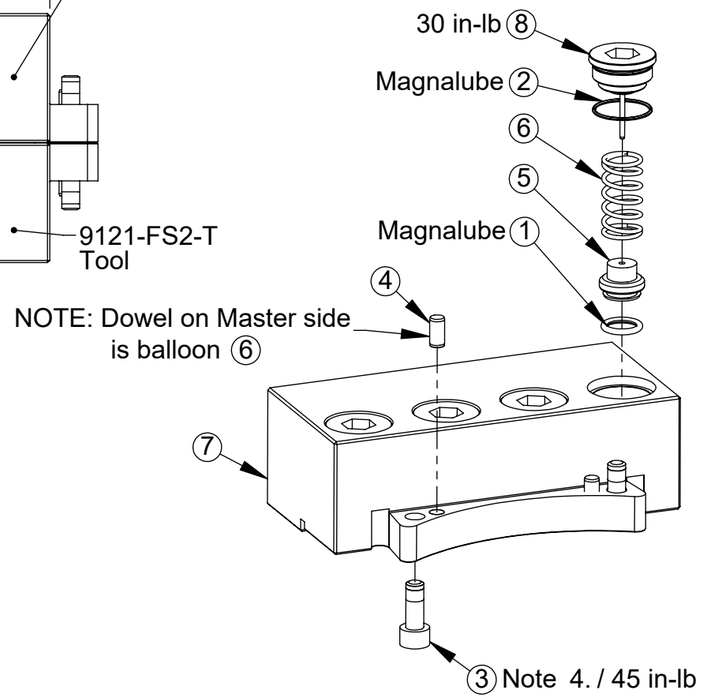

Notes:
Materials of Construction:
1. Housings & Springs - Stainless Steel
2. Valve Components - Stainless Steel, PVC, Nitrile & Viton Rubber
3. Replacement stem contains pre-applied thread locker. Use Loctite 7649 primer and Loctite 222 if reassembling with original stem.
4. Replacement screw contains pre-applied thread locker. Use Loctite 7649 primer and Loctite 242 if reassembling with original screw.

Guidelines for Operation:
5. Maintain pH near neutral.
6. Minimize particle count & size.
7. Keep mating surfaces clean and free of debris.

Note: Service Kit 9120-F2-M-Kit Contains (1) each of items 1, 2, 3, & 7

ITEM NO.	QTY.	PART NUMBER	DESCRIPTION
1	4	3410-0001065-01	O-Ring 14MM X 2MM Buna
2	4	3410-0001068-01	Mini U-Cup Seal 18mm ID x 22mm Buna
3	4	3410-0001183-01	O-Ring 6MM X 2MM Buna D90
4	4	3410-0001397-01	O-Ring, 2mm ID x 1.5mm W, Viton, D75
5	2	3500-1066016-21A	M6-1 x 16mm SHCS, SS, Pre-Applied
6	2	3540-0105010-21	5mm x 10mm Dowel Pin SST
7	4	3700-20-1459	SPRING, FLUID/AIR MODULE, MASTER
8	4	3700-20-2994	Master Check Valve Piston
9	4	3700-20-8065	VALVE STEM, HIGH STRENGTH
10	1	3700-20-8620	FS2 Housing, Master
11	6	4010-0000021-01	1/4" NPT Rubber Bushing, Nitrile

Note: Service Kit 9120-F1-T-Kit Contains (1) each of items 1, 2, & 6

ITEM NO.	QTY.	PART NUMBER	DESCRIPTION
1	4	3410-0001067-01	O-ring, 10mm x 2mm, Buna N, Dur. 90
2	4	3410-0001284-01	O-ring, .669OD x .047 wall, 70D, Buna-N
3	2	3500-1066016-21A	M6-1 x 16mm SHCS, SS, Pre-Applied
4	2	3540-0105010-21	5mm x 10mm Dowel Pin SST
5	4	3700-20-1457	Tool Fluid/Air Check Valve Piston
6	4	3700-20-1460	SPRING, FLUID/AIR MODULE, TOOL
7	1	3700-20-8621	FS2 Housing, Tool
8	4	9005-20-2267	F/A Plug Assembly, Tool, 3/8" Valves

NOTES: UNLESS OTHERWISE SPECIFIED.

DO NOT SCALE DRAWING. ALL DIMENSIONS ARE IN MILLIMETERS.

3rd ANGLE PROJECTION

ATI INDUSTRIAL AUTOMATION
1031 Goodworth Drive, Apex, NC 27539, USA
Tel: +1.919.772.0115 www.ati-ia.com
Fax: +1.919.772.8259 ISO 9001 Registered Company

PROPERTY OF ATI INDUSTRIAL AUTOMATION, INC. NOT TO BE REPRODUCED IN ANY MANNER EXCEPT ON ORDER OR WITH PRIOR WRITTEN AUTHORIZATION OF ATI.

DRAWN BY: D.Lawson-1/9/14

CHECKED BY: D.Swanson-1/10/14

PROJECT # 131203-2 SHEET 1 OF 1

TITLE: FS2 Fluid/Air Module Customer Drawing

SCALE	SIZE	DRAWING NUMBER	REVISION
1:2	B	9630-20-FS2	03