| Rev. | Description | Initiator | Date |
|---|---|---|---|
| 07 | ECO 21675: UPDATED NOTE WITH AIDA INCLUSION. | AMM | 11/2/2023 |

**"DANGER!" - Electrical Shock Hazard**

**This module has a Voltage of 50V or greater, NO contact should be attempted before removing power. This especially includes separation or insertion of the mating connectors or any contact with the tool changer or its components.**

9120-RE10-M

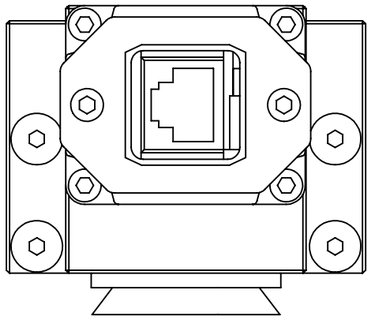

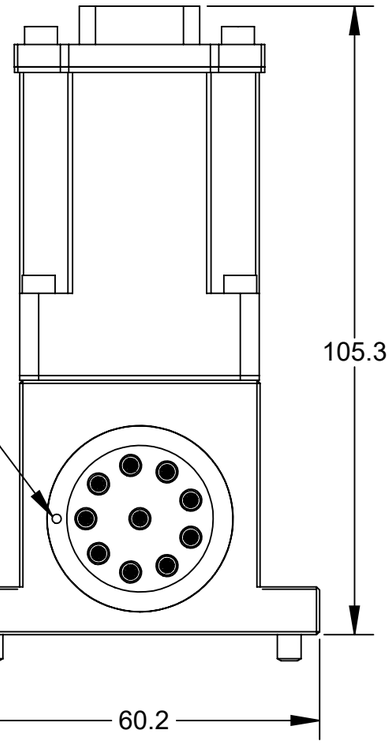





9120-RE10-T

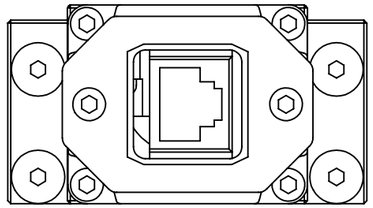

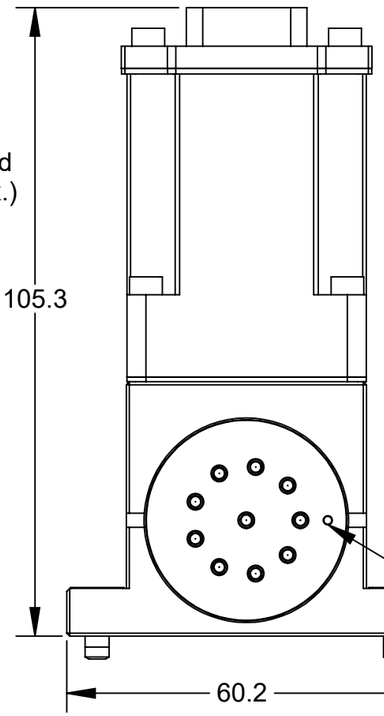


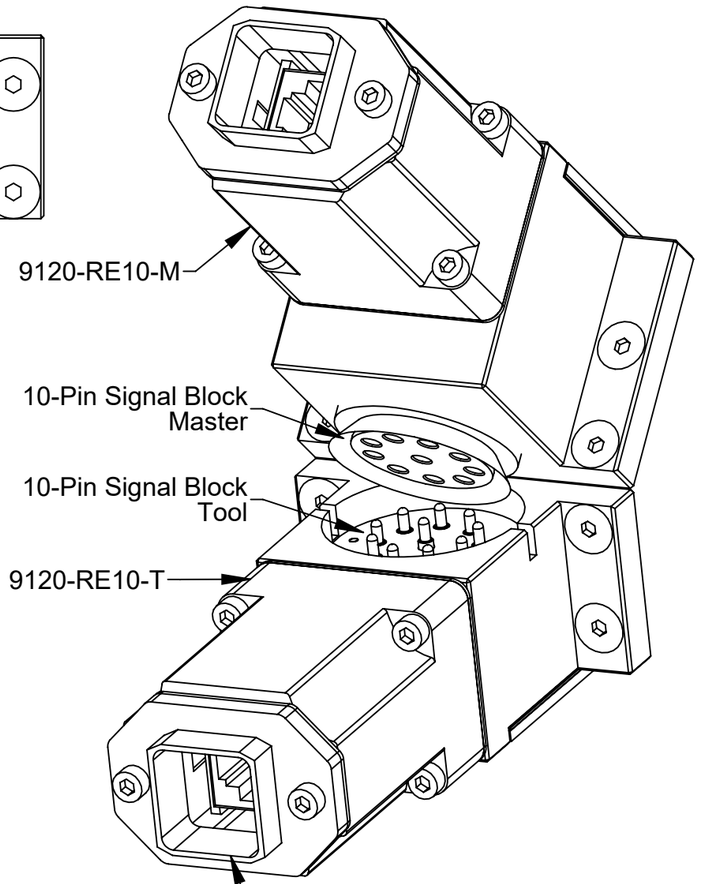


(2) Ethernet Connector
Phoenix Contact Push-Pull RJ45 Connector
According to AIDA
VS-PPC-F1-RJ45-POBK-1R-F and
VS-08-BU-RJ45-6-F/PK

NOTES: UNLESS OTHERWISE SPECIFIED.

DO NOT SCALE DRAWING. ALL DIMENSIONS ARE IN MILLIMETERS.

3rd ANGLE PROJECTION


ATI INDUSTRIAL AUTOMATION

*1031 Goodworth Drive, Apex, NC 27539, USA*
*Tel: +1.919.772.0115 www.ati-ia.com*
*Fax: +1.919.772.8259 ISO 9001 Registered Company*



PROPERTY OF ATI INDUSTRIAL AUTOMATION, INC. NOT TO BE REPRODUCED IN ANY MANNER EXCEPT ON ORDER OR WITH PRIOR WRITTEN AUTHORIZATION OF ATI.


DRAWN BY: A Pongor, 02/25/11

CHECKED BY: D Norton, 02/25/11
D Mushow 02/25/11

PROJECT # 101005-1 SHEET 1 OF 2

TITLE: 10/100 CAT5e Ethernet Pass Through Module

| SCALE | SIZE | DRAWING NUMBER | REVISION |
|---|---|---|---|
| 1:1 | B | 9630-20-RE10 | 07 |

## MASTER SIDE

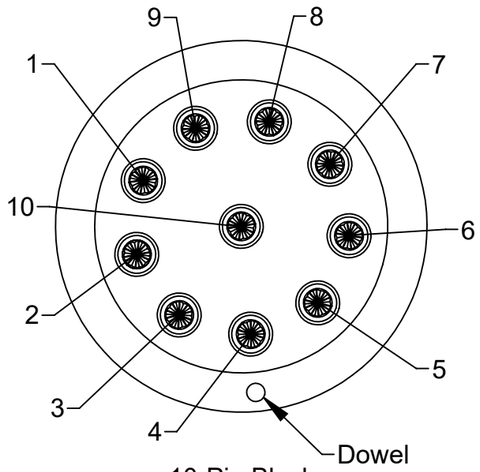


10-Pin Block
Scale 2:1

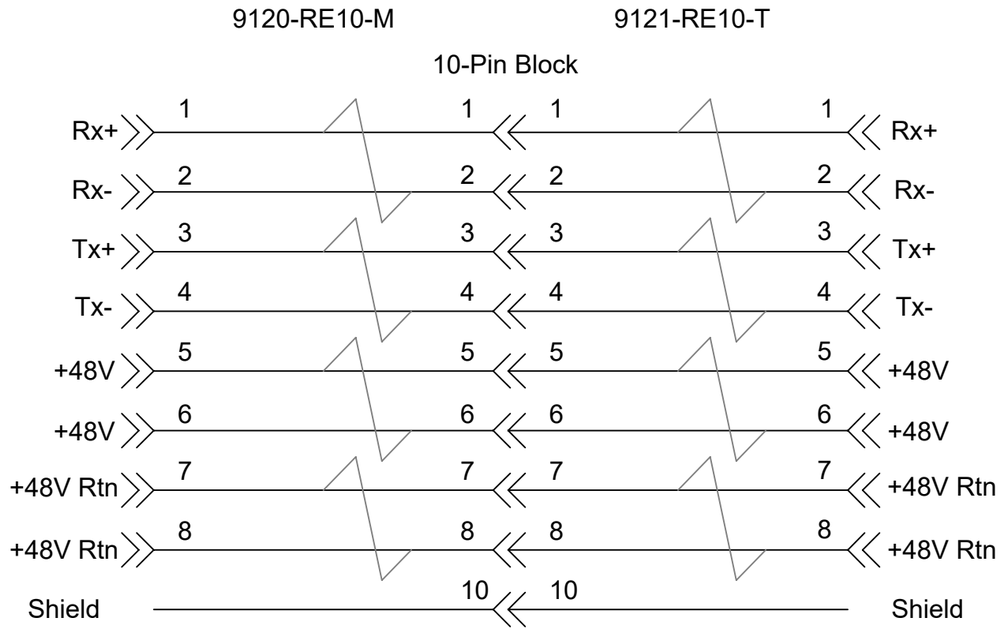


## TOOL SIDE

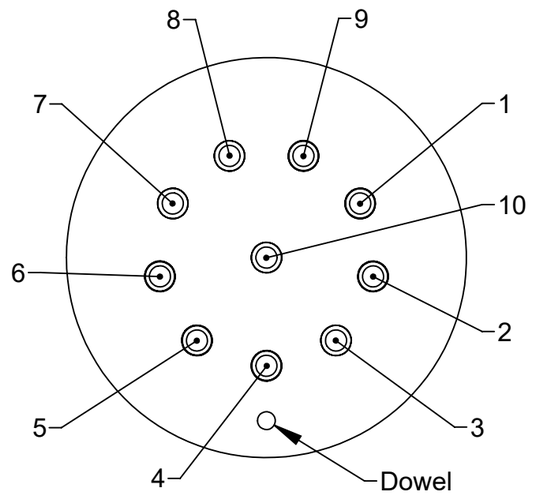


10 Pin Block
Scale 2:1

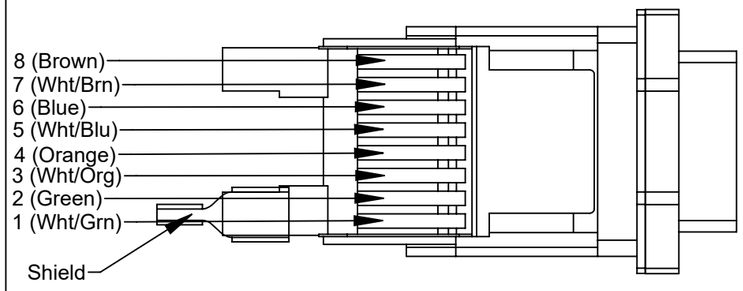


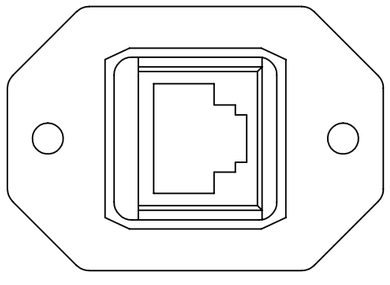

Ethernet Connector
Phoenix Contact Push-Pull RJ45 Connector
VS-PPC-F1-RJ45-POBK-1R-F and
VS-08-BU-RJ45-6-F/PK
Scale 3:2

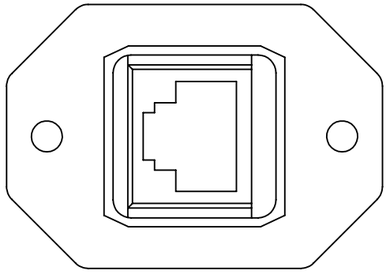

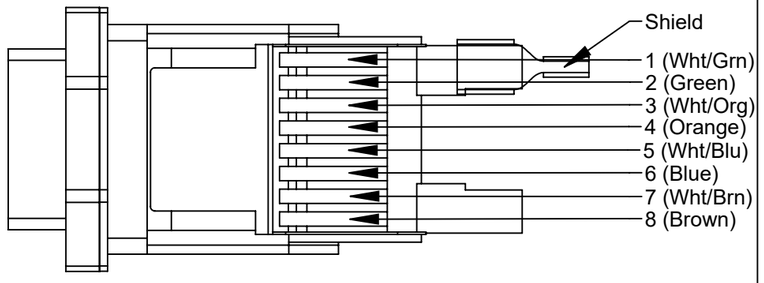


Ethernet Connector
Phoenix Contact Push-Pull RJ45 Connector
VS-PPC-F1-RJ45-POBK-1R-F and
VS-08-BU-RJ45-6-F/PK
Scale 3:2

Note

1. Pin 10 is first-to-mate, last-to-break contact.
2. Mating Connectors - Push-pull RJ45 Connectors According to AIDA. Do not use with standard RJ45 connectors, they will not lock into the module connector.

NOTES: UNLESS OTHERWISE SPECIFIED.

DO NOT SCALE DRAWING. ALL DIMENSIONS ARE IN MILLIMETERS.

3rd ANGLE PROJECTION

ATI INDUSTRIAL AUTOMATION
*1031 Goodworth Drive, Apex, NC 27539, USA*
*Tel: +1.919.772.0115 www.ati-ia.com*
*Fax: +1.919.772.8259 ISO 9001 Registered Company*

PROPERTY OF ATI INDUSTRIAL AUTOMATION, INC. NOT TO BE REPRODUCED IN ANY MANNER EXCEPT ON ORDER OR WITH PRIOR WRITTEN AUTHORIZATION OF ATI.

DRAWN BY: A Pongor, 02/25/11
CHECKED BY: D Norton, 02/25/11
D Mushow 02/25/11
PROJECT # 101005-1 SHEET 2 OF 2

TITLE: 10/100 CAT5e Ethernet Pass Through Module

| SCALE | SIZE | DRAWING NUMBER | REVISION |
|---|---|---|---|
| 1:1 | B | 9630-20-RE10 | 07 |