"DANGER!" - Electrical Shock Hazard

This module has a Voltage of 50V or greater, NO contact should be attempted before removing power. This especially includes separation or insertion of the mating connectors or any contact with the tool changer or its components.

Rev.	Description	Initiator	Date
04	ECO 21823; Updated Tool ID window and hardware.	LJH	4/28/2026

SA2-M/SA7-T Dimensions

SA2 Master Module
(9121-SA2-M)

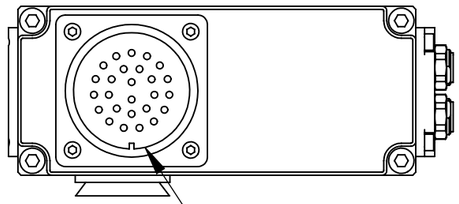

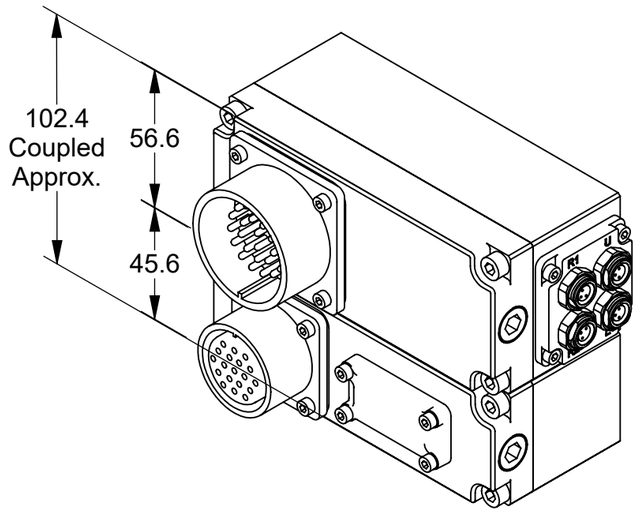

SA7 Tool Module
(9121-SA7-T)

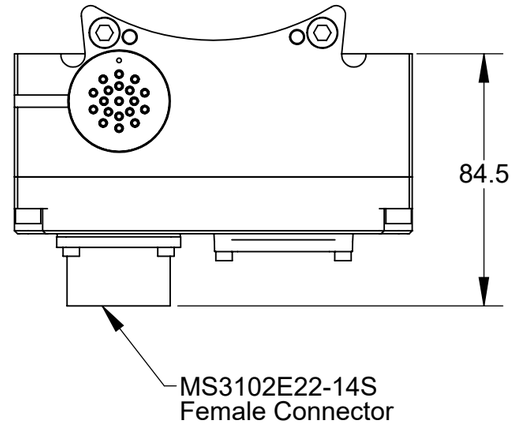

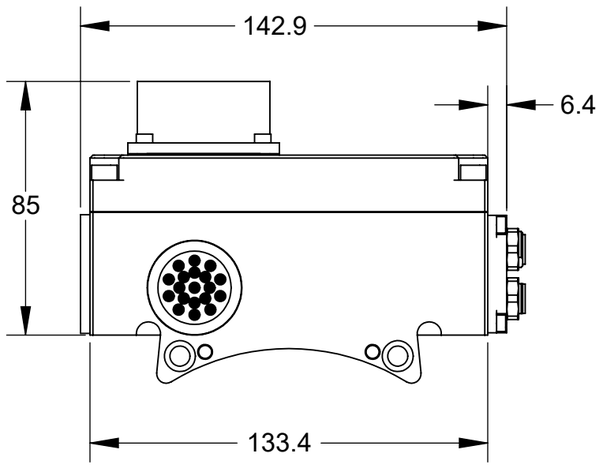

Tool ID Switch
Accessible Through Window
(Window Not Shown for Clarity)

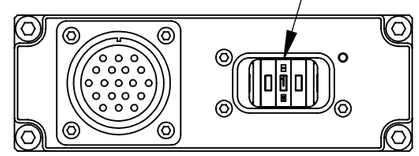

Sheet Configurations
Sheet 1: SA2-M/SA7-T Dimensions
Sheet 2: SA2-M/SA7-T Serviceable Parts
Sheet 3: SA2 Master with SA7 Tool (0-9 Tool ID)

NOTES: UNLESS OTHERWISE SPECIFIED.

DO NOT SCALE DRAWING. ALL DIMENSIONS ARE IN MILLIMETERS.

3rd ANGLE PROJECTION

ATI INDUSTRIAL AUTOMATION

1031 Goodworth Drive, Apex, NC 27539, USA
Tel: +1.919.772.0115 Email: info@ati-ia.com
Fax: +1.919.772.8259 www.ati-ia.com
ISO 9001 Registered Company

PROPERTY OF ATI INDUSTRIAL AUTOMATION, INC. NOT TO BE REPRODUCED IN ANY MANNER EXCEPT ON ORDER OR WITH PRIOR WRITTEN AUTHORIZATION OF ATI.

DRAWN BY: C. Flesock, 5/7/07

CHECKED BY: R. Heavner, 5/7/07

PROJECT #

SHEET 1 OF 3

TITLE: SA2-M/SA7-T Customer Drawing

SCALE	SIZE	DRAWING NUMBER	REVISION
1:2	B	9630-20-SA2M SA7T	04

SA2-M/SA7-T Serviceable Parts

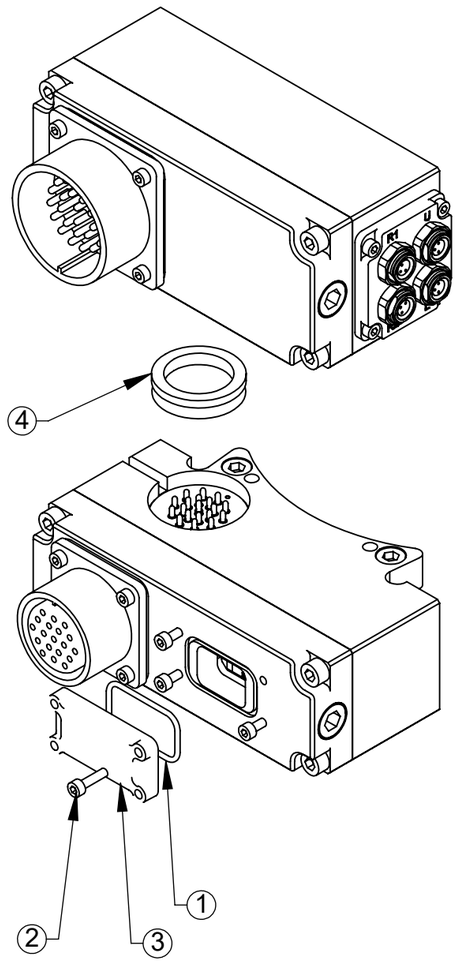

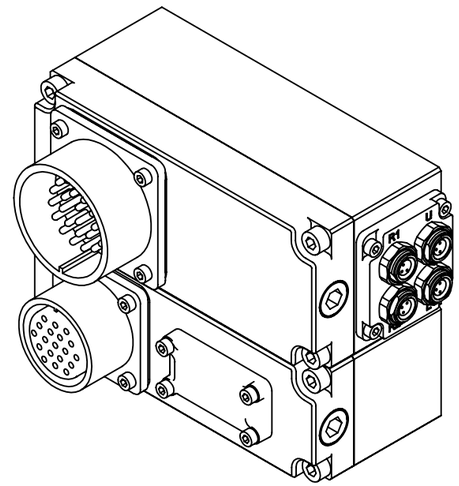

ITEM NO.	QTY.	PART NUMBER	DESCRIPTION
1	1	3410-0001092-01	O-ring AS568-023
2	4	3500-1058012-15	M3-0.5 x 12mm SHCS, Blue
3	1	3700-20-11881	Thick Window for DP/DE45 Master, Injection Molded
4	1	4010-0000030-01	V-Ring Seal

NOTES: UNLESS OTHERWISE SPECIFIED.

DO NOT SCALE DRAWING. ALL DIMENSIONS ARE IN MILLIMETERS.

3rd ANGLE PROJECTION

ATI INDUSTRIAL AUTOMATION

1031 Goodworth Drive, Apex, NC 27539, USA
Tel: +1.919.772.0115 Email: info@ati-ia.com
Fax: +1.919.772.8259 www.ati-ia.com
ISO 9001 Registered Company

PROPERTY OF ATI INDUSTRIAL AUTOMATION, INC. NOT TO BE REPRODUCED IN ANY MANNER EXCEPT ON ORDER OR WITH PRIOR WRITTEN AUTHORIZATION OF ATI.

DRAWN BY: C. Flesock, 5/7/07

CHECKED BY: R. Heavner, 5/7/07

PROJECT #

SHEET 2 OF 3

TITLE: SA2-M/SA7-T Customer Drawing

SCALE	SIZE	DRAWING NUMBER	REVISION
1:2	B	9630-20-SA2M SA7T	04

SA2 Master with SA7 Tool

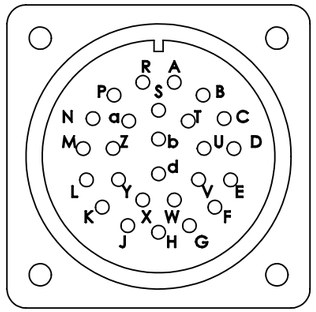

Amphenol Connector
Master Side
MS3102E28-12P
Face View
Scale 1:1

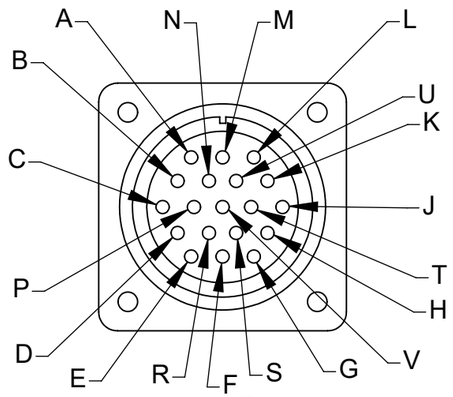

Amphenol Connector
Tool Side
MS3102E22-14S
Face View
Scale 1:1

SA2-M to SA7-T
Pin Out

SA2 Master MS3102A28-15P Male Connector			SA7 Tool MS3102E22-14S Female Connector
0 Vdc Reference	A	>>	A 0 Vdc Reference
24 Vdc (I/P)	B	>>	B 24 Vdc (I/P)
available	C	>>	C available
available	D	>>	D available
available	E	>>	E available
available	F	>>	F available
available	G	>>	G available
available	H	>>	H available
available	J	>>	J available
available	K	>>	K available
available	L	>>	L available
available	M	>>	M available
available	N	>>	N available
available	P	>>	P available
available	R	>>	R available
Tool ID, Bit Value 8	S	>> Tool ID 0-9	S not available
Tool ID, Bit Value 4	T	>> Tool ID 0-9	T not available
Tool ID, Bit Value 2	U	>> Tool ID 0-9	U not available
Tool ID, Bit Value 1	V	>> Tool ID 0-9	V not available
not available	W		
not available	X		
not available	Y		
RTL #1	Z		
RTL #2	a		
Lock I/P	b		
Unlock I/P	d		

Controller Outputs		
Pin:	*Signal:*	*Description:*
A	0 VDC	Voltage Reference
B	24 VDC	Voltage Supply

Controller Inputs		
Pin:	*Signal:*	*Description:*
S	Tool ID	Bit Value 8 (See Table)
T	Tool ID	Bit Value 4 (See Table)
U	Tool ID	Bit Value 2 (See Table)
V	Tool ID	Bit Value 1 (See Table)
Z	RTL #1	Ready-To-Lock Input #1
a	RTL #2	Ready-To-Lock Input #2
b	Lock	Tool Changer Lock Input
d	Unlock	Tool Changer Unlock Input

Switch 1	Pin "S"	Pin "T"	Pin "U"	Pin "V"
0	0	0	0	0
1	0	0	0	1
2	0	0	1	0
3	0	0	1	1
4	0	1	0	0
5	0	1	0	1
6	0	1	1	0
7	0	1	1	1
8	1	0	0	0
9	1	0	0	1

General Notes:

1. Pin A is first mate and last break during a tool change and is specified for use as 0 VDC and/or ground service.
2. The common for Tool ID is tied into the 0 VDC line (Pin A). The Tool ID switches are Rated for service at 30V and 0.1 mA max. Refer to the Tool ID table for switch setup information.

NOTES: UNLESS OTHERWISE SPECIFIED.

DO NOT SCALE DRAWING. ALL DIMENSIONS ARE IN MILLIMETERS.

3rd ANGLE PROJECTION

ATI INDUSTRIAL AUTOMATION

1031 Goodworth Drive, Apex, NC 27539, USA
Tel: +1.919.772.0115 Email: info@ati-ia.com
Fax: +1.919.772.8259 www.ati-ia.com
ISO 9001 Registered Company

PROPERTY OF ATI INDUSTRIAL AUTOMATION, INC. NOT TO BE REPRODUCED IN ANY MANNER EXCEPT ON ORDER OR WITH PRIOR WRITTEN AUTHORIZATION OF ATI.

DRAWN BY: C. Flesock, 5/7/07

CHECKED BY: R. Heavner, 5/7/07

PROJECT #

SHEET 3 OF 3

TITLE: SA2-M/SA7-T Customer Drawing

SCALE	SIZE	DRAWING NUMBER	REVISION
1:2	B	9630-20-SA2M SA7T	04