Rev.	Description	Initiator	Date
11	ECO 21814; Updated to reflect changes to 9121-SA4-T	DS	9/5/2024

"DANGER!" - Electrical Shock Hazard

This module has a Voltage of 50V or greater, NO contact should be attempted before removing power. This especially includes separation or insertion of the mating connectors or any contact with the tool changer or its components.

VA2 Family Dimensions

VA2 Master Module
(9121-VA2-M)

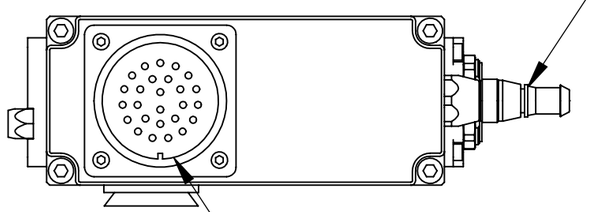

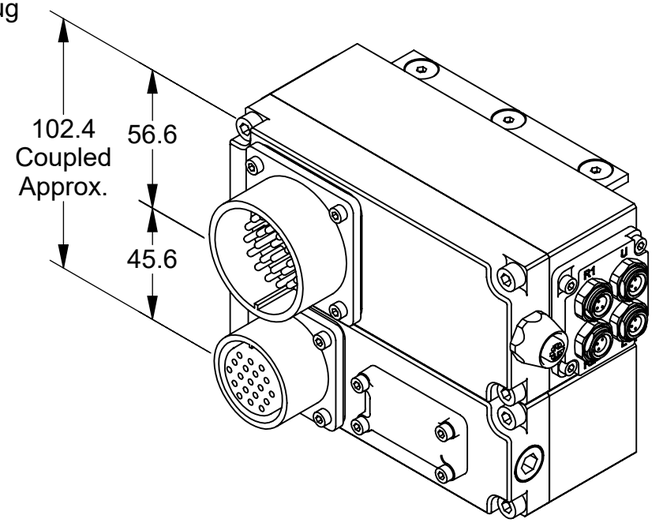

SA Tool Modules
(9121-SAx-T)

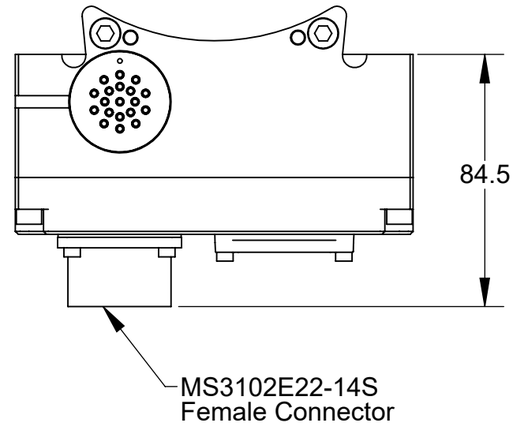

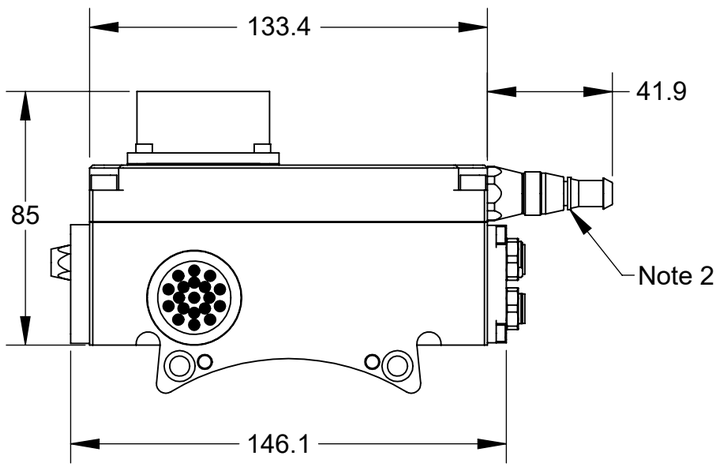

Tool ID Switches
Accessible Through Window
(If Applicable)
(Window Not Shown for Clarity)
(SA3Z1-T Shown)

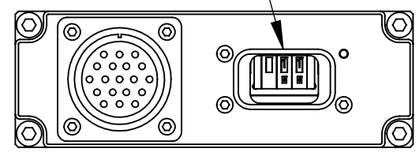

Notes:

1. Sheet Configurations
   Sheet 1: VA2 Family Dimensions
   Sheet 2: VA2 Family Serviceable Parts
   Sheet 3: VA2 Master with SA2 Tool
   Sheet 4: VA2 Master with SA3 Tool (0-9 Tool ID)
   Sheet 5: VA2 Master with SA4 Tool (0-99 Tool ID)
   Sheet 6: VA2 Master with SA3Z1 Tool (0-F Tool ID)
2. Teach Plug is not connected to the Tool Stand Interlock (TSI) connector. Item is bagged separately.

NOTES: UNLESS OTHERWISE SPECIFIED.

DO NOT SCALE DRAWING. ALL DIMENSIONS ARE IN MILLIMETERS.

3rd ANGLE PROJECTION

ATI INDUSTRIAL AUTOMATION
1031 Goodworth Drive, Apex, NC 27539, USA
Tel: +1.919.772.0115 www.ati-ia.com
Fax: +1.919.772.8259 ISO 9001 Registered Company

PROPERTY OF ATI INDUSTRIAL AUTOMATION, INC. NOT TO BE REPRODUCED IN ANY MANNER EXCEPT ON ORDER OR WITH PRIOR WRITTEN AUTHORIZATION OF ATI.

DRAWN BY: B. Digeso, 4/14/05
CHECKED BY: R. Heavner, 4/14/05
PROJECT # 040611-1 SHEET 1 OF 6

TITLE: VA2 Family Module Drawing

SCALE	SIZE	DRAWING NUMBER	REVISION
1:2	B	9630-20-VA2 Family	11

VA2 Family Serviceable Parts

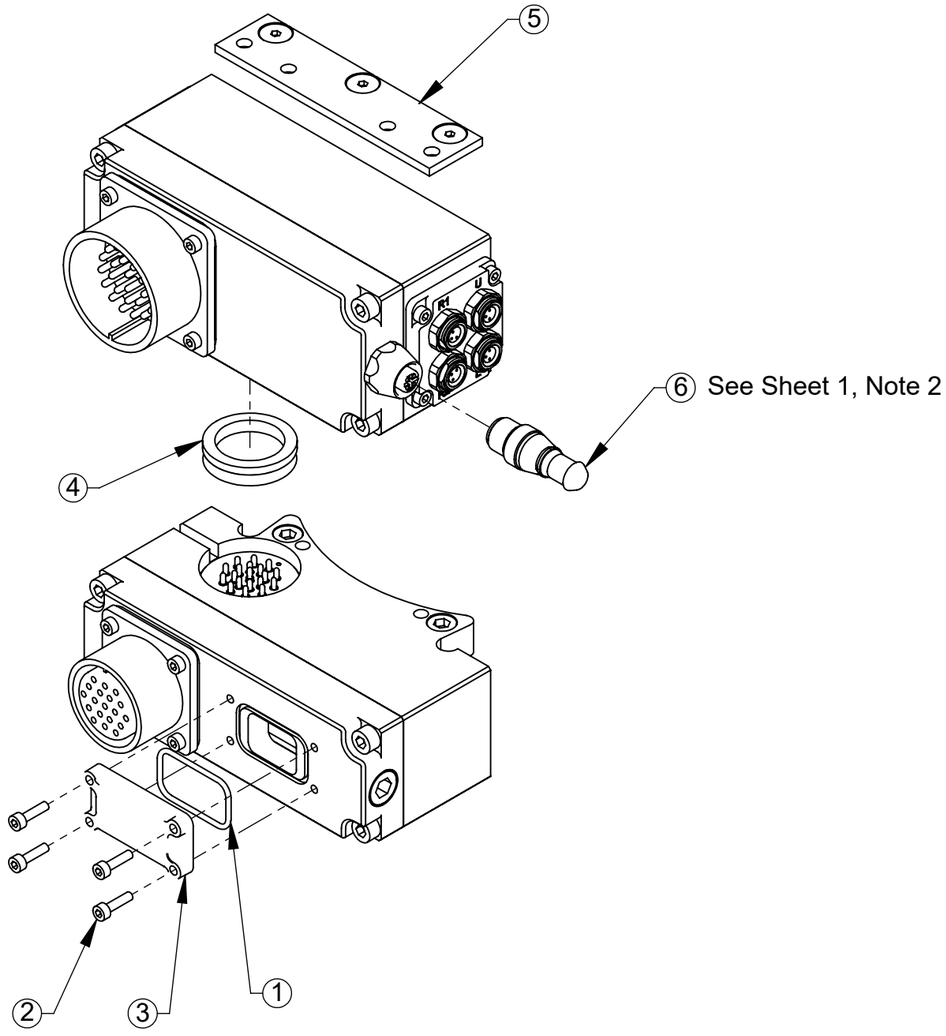

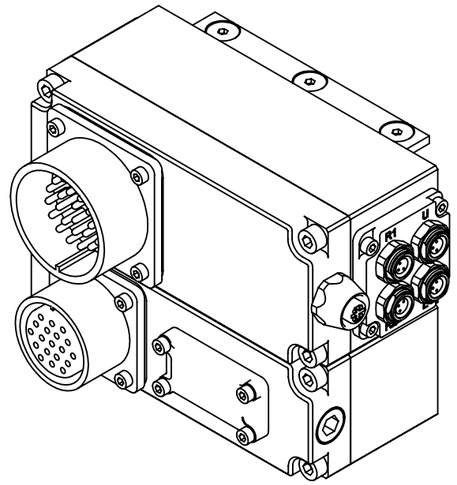

ITEM NO.	QTY.	PART NUMBER	DESCRIPTION
1	1	3410-0001092-01	O-ring AS568-023
2	4	3500-1058012-15	M3X12 SHCS, 12.9, ISO4762/DIN912, Corrosion Protection Coating
3	1	3700-20-11881	DeviceNet Master Window Thick, Injection Molded
4	1	4010-0000030-01	V-Ring Seal
5	1	9005-20-1198	Master Cleat Sub-Assembly
6	1	9120-DE45-PLUG	Yellow Teach Plug w/ Lanyard and Caution Tags

NOTES: UNLESS OTHERWISE SPECIFIED.

DO NOT SCALE DRAWING. ALL DIMENSIONS ARE IN MILLIMETERS.

3rd ANGLE PROJECTION

ATI INDUSTRIAL AUTOMATION

1031 Goodworth Drive, Apex, NC 27539, USA
Tel: +1.919.772.0115 www.ati-ia.com
Fax: +1.919.772.8259 ISO 9001 Registered Company

PROPERTY OF ATI INDUSTRIAL AUTOMATION, INC. NOT TO BE REPRODUCED IN ANY MANNER EXCEPT ON ORDER OR WITH PRIOR WRITTEN AUTHORIZATION OF ATI.

DRAWN BY: B. Digeso, 4/14/05

CHECKED BY: R. Heavner, 4/14/05

PROJECT # 040611-1 SHEET 2 OF 6

TITLE: VA2 Family Module Drawing

SCALE	SIZE	DRAWING NUMBER	REVISION
1:2	B	9630-20-VA2 Family	11

VA2 Master with SA2 Tool

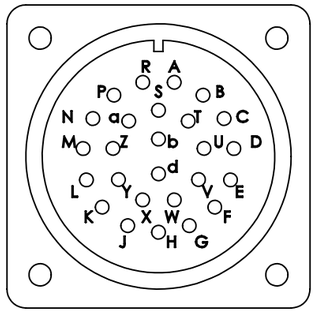

Amphenol Connector
Master Side
MS3102E28-12P
Face View
Scale 1:1

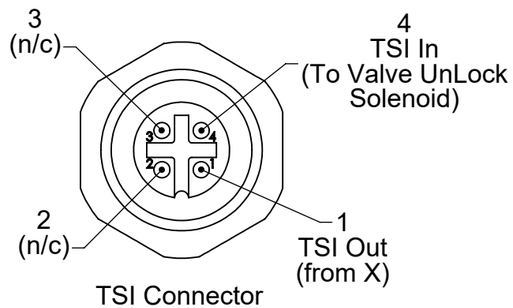

TSI Connector
VA2 Master Side
Scale 2:1
(4-Pin Euro)

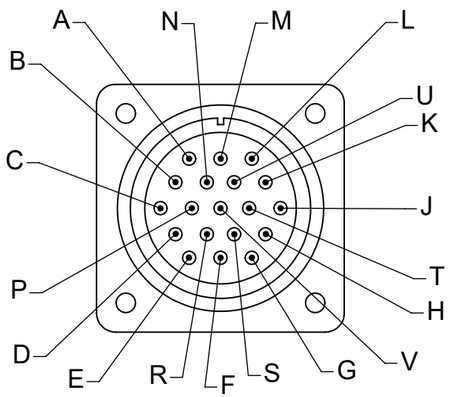

Amphenol Connector
Tool Side
MS3102E22-14S
Face View
Scale 1:1

VA2-M to SA2-T Pin Out

VA2 Master MS3102E28-12P Male Connector				SA2 Tool MS3102E22-14S Female Connector
0 Vdc Reference	A	>>	A	0 Vdc Reference
24 Vdc (I/P)	B	>>	B	24 Vdc (I/P)
available	C	>>	C	available
available	D	>>	D	available
available	E	>>	E	available
available	F	>>	F	available
available	G	>>	G	available
available	H	>>	H	available
available	J	>>	J	available
available	K	>>	K	available
available	L	>>	L	available
available	M	>>	M	available
available	N	>>	N	available
available	P	>>	P	available
available	R	>>	R	available
available	S	>>	S	available
available	T	>>	T	available
available	U	>>	U	available
available	V	>>	V	available
Lock O/P	W			
(1) TSI Connection	X			
not available	Y			
RTL #1	Z			
RTL #2	a			
Lock I/P	b			
Unlock I/P	d			

Controller Outputs		
Pin:	*Signal:*	*Description:*
A	0 VDC	Voltage Reference
B	24 VDC	Voltage Supply
W	24 VDC	Lock Solenoid Supply (Double Solenoid)
X	24 VDC	Unlock Solenoid Supply
Controller Inputs		
Pin:	*Signal:*	*Description:*
Z	RTL #1	Ready-To-Lock Input #1
a	RTL #2	Ready-To-Lock Input #2
b	Lock	Tool Changer Lock Input
d	Unlock	Tool Changer Unlock Input

General Notes:

1. Pin A is first mate and last break during a tool change and is specified for use as 0 VDC and/or ground service.

2. The VA2-M is supplied with a Teach Plug (part # 9120-DE45-PLUG) to make the TSI circuit (Pin 1 to Pin 4 on TSI Connector). It is recommended that the customer integrate a mechanical limit switch to use with this circuit. The limit switch would be mounted to indicate that the robot and tool changer are in the stand, thus making the circuit and only allowing the tool changer to uncouple while in the stand. Contact ATI for further assistance.

NOTES: UNLESS OTHERWISE SPECIFIED.

DO NOT SCALE DRAWING. ALL DIMENSIONS ARE IN MILLIMETERS.

3rd ANGLE PROJECTION

ATI INDUSTRIAL AUTOMATION

1031 Goodworth Drive, Apex, NC 27539, USA
Tel: +1.919.772.0115 www.ati-ia.com
Fax: +1.919.772.8259 ISO 9001 Registered Company

PROPERTY OF ATI INDUSTRIAL AUTOMATION, INC. NOT TO BE REPRODUCED IN ANY MANNER EXCEPT ON ORDER OR WITH PRIOR WRITTEN AUTHORIZATION OF ATI.

DRAWN BY: B. Digeso, 4/14/05

CHECKED BY: R. Heavner, 4/14/05

PROJECT # 040611-1 SHEET 3 OF 6

TITLE: VA2 Family Module Drawing

SCALE	SIZE	DRAWING NUMBER	REVISION
1:2	B	9630-20-VA2 Family	11

VA2 Master with SA3 Tool (0-9 Tool ID)

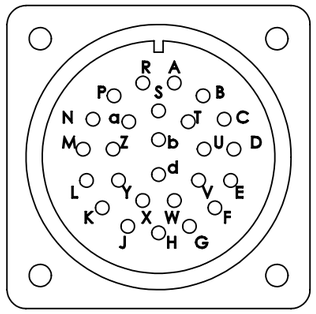

Amphenol Connector
Master Side
MS3102E28-12P
Face View
Scale 1:1

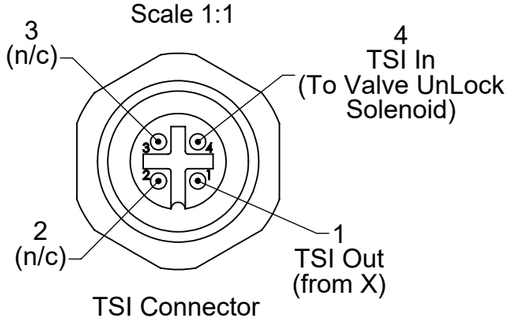

TSI Connector
VA2 Master Side
Scale 2:1
(4-Pin Euro)

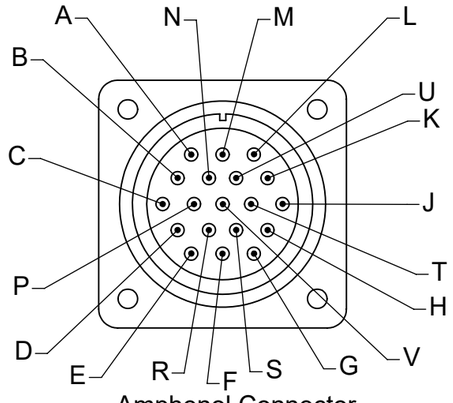

Amphenol Connector
Tool Side
MS3102E22-14S
Face View
Scale 1:1

VA2-M to SA3-T
Pin Out

VA2 Master MS3102A28-15P Male Connector			SA3 Tool MS3102E22-14S Female Connector	
0 Vdc Reference	A	>>	A	0 Vdc Reference
24 Vdc (I/P & Tool ID)	B	>>	B	24 Vdc (I/P & Tool ID)
available	C	>>	C	available
available	D	>>	D	available
available	E	>>	E	available
available	F	>>	F	available
available	G	>>	G	available
available	H	>>	H	available
available	J	>>	J	available
available	K	>>	K	available
available	L	>>	L	available
available	M	>>	M	available
available	N	>>	N	available
available	P	>>	P	available
available	R	>>	R	available
Tool ID, Bit Value 8	S	>>	S (Tool ID 0-9)	not available
Tool ID, Bit Value 4	T	>>	T (Tool ID 0-9)	not available
Tool ID, Bit Value 2	U	>>	U (Tool ID 0-9)	not available
Tool ID, Bit Value 1	V	>>	V (Tool ID 0-9)	not available
Lock O/P	W			
(1) TSI Connection	X			
not available	Y			
RTL #1	Z			
RTL #2	a			
Lock I/P	b			
Unlock I/P	d			

Controller Outputs		
Pin:	*Signal:*	*Description:*
A	0 VDC	Voltage Reference
B	24 VDC	Voltage Supply
W	24 VDC	Lock Solenoid Supply (Double Solenoid)
X	24 VDC	UnLock Solenoid Supply
Controller Inputs		
Pin:	*Signal:*	*Description:*
S	Tool ID	Bit Value 8 (See Table)
T	Tool ID	Bit Value 4 (See Table)
U	Tool ID	Bit Value 2 (See Table)
V	Tool ID	Bit Value 1 (See Table)
Z	RTL #1	Ready-To-Lock Input #1
a	RTL #2	Ready-To-Lock Input #2
b	Lock	Tool Changer Lock Input
d	Unlock	Tool Changer Unlock Input

Switch 1	Pin "S"	Pin "T"	Pin "U"	Pin "V"
0	0	0	0	0
1	0	0	0	1
2	0	0	1	0
3	0	0	1	1
4	0	1	0	0
5	0	1	0	1
6	0	1	1	0
7	0	1	1	1
8	1	0	0	0
9	1	0	0	1

General Notes:

1. Pin A is first mate and last break during a tool change and is specified for use as 0 VDC and/or ground service.
2. The common for Tool ID is tied into the 24VDC line (Pin B). The Tool ID switches are Rated for service at 50V and 100 mA max. Refer to the Tool ID table for switch setup information.
3. The VA2-M is supplied with a Teach Plug (part # 9120-DE45-PLUG) to make the TSI circuit (Pin 1 to Pin 4 on TSI Connector). It is recommended that the customer integrate a mechanical limit switch to use with this circuit. The limit switch would be mounted to indicate that the robot and tool changer are in the stand, thus making the circuit and only allowing the tool changer to uncouple while in the stand. Contact ATI for further assistance.

NOTES: UNLESS OTHERWISE SPECIFIED.

DO NOT SCALE DRAWING. ALL DIMENSIONS ARE IN MILLIMETERS.

3rd ANGLE PROJECTION

ATI INDUSTRIAL AUTOMATION

1031 Goodworth Drive, Apex, NC 27539, USA
Tel: +1.919.772.0115 www.ati-ia.com
Fax: +1.919.772.8259 ISO 9001 Registered Company

PROPERTY OF ATI INDUSTRIAL AUTOMATION, INC. NOT TO BE REPRODUCED IN ANY MANNER EXCEPT ON ORDER OR WITH PRIOR WRITTEN AUTHORIZATION OF ATI.

DRAWN BY: B. Digeso, 4/14/05
CHECKED BY: R. Heavner, 4/14/05
PROJECT # 040611-1 SHEET 4 OF 6

TITLE: VA2 Family Module Drawing

SCALE	SIZE	DRAWING NUMBER	REVISION
1:2	B	9630-20-VA2 Family	11

VA2 Master with SA4 Tool (0-99 Tool ID)

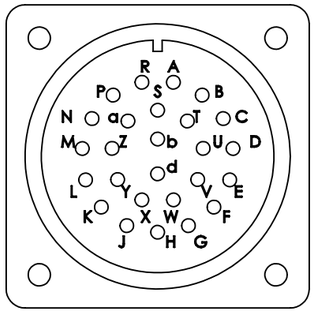

Amphenol Connector
Master Side
MS3102E28-12P
Face View
Scale 1:1

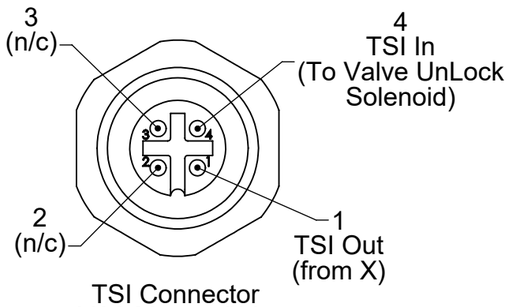

TSI Connector
VA2 Master Side
Scale 2:1
(4-Pin Euro)

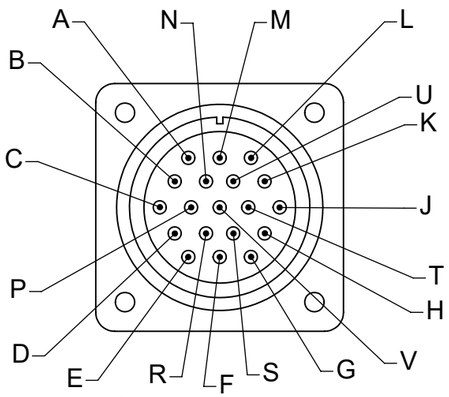

Amphenol Connector
Tool Side
MS3102E22-14S
Face View
Scale 1:1

VA2-M to SA4-T
Pin Out

VA2 Master MS3102A28-15P Male Connector			SA4 Tool MS3102E22-14S Female Connector	
0 Vdc Reference	A	>>	A	0 Vdc Reference
24 Vdc (I/P & Tool ID)	B	>>	B	24 Vdc (I/P & Tool ID)
available	C	>>	C	available
available	D	>>	D	available
available	E	>>	E	available
available	F	>>	F	available
available	G	>>	G	available
available	H	>>	H	available
available	J	>>	J	available
available	K	>>	K	available
available	L	>>	L	available
SW2 Tool ID, Bit Value 8	M	>>	M	not available
SW2 Tool ID, Bit Value 4	N	>>	N	not available
SW2 Tool ID, Bit Value 2	P	>>	P	not available
SW2 Tool ID, Bit Value 1	R	>>	R	not available
SW1 Tool ID, Bit Value 8	S	>>	S	not available
SW1 Tool ID, Bit Value 4	T	>>	T	not available
SW1 Tool ID, Bit Value 2	U	>>	U	not available
SW1 Tool ID, Bit Value 1	V	>>	V	not available
Lock O/P	W			
(1) TSI Connection	X			
not available	Y			
RTL #1	Z			
RTL #2	a			
Lock I/P	b			
Unlock I/P	d			

Tool ID 0-9 Switch 2

Tool ID 0-9 Switch 1

Controller Outputs		
Pin:	*Signal:*	*Description:*
A	0 VDC	Voltage Reference
B	24 VDC	Voltage Supply
W	24 VDC	Lock Solenoid Supply (Double Solenoid)
X	24 VDC	UnLock Solenoid Supply
Controller Inputs		
Pin:	*Signal:*	*Description:*
M	Tool ID	SW2 Bit Value 8 (See Table)
N	Tool ID	SW2 Bit Value 4 (See Table)
P	Tool ID	SW2 Bit Value 2 (See Table)
R	Tool ID	SW2 Bit Value 1 (See Table)
S	Tool ID	SW1 Bit Value 8 (See Table)
T	Tool ID	SW1 Bit Value 4 (See Table)
U	Tool ID	SW1 Bit Value 2 (See Table)
V	Tool ID	SW1 Bit Value 1 (See Table)
Z	RTL #1	Ready-To-Lock Input #1
a	RTL #2	Ready-To-Lock Input #2
b	Lock	Tool Changer Lock Input
d	Unlock	Tool Changer Unlock Input

	Pin	Pin	Pin	Pin
Switch 1	"S"	"T"	"U"	"V"
Switch 2	"M"	"N"	"P"	"R"
0	0	0	0	0
1	0	0	0	1
2	0	0	1	0
3	0	0	1	1
4	0	1	0	0
5	0	1	0	1
6	0	1	1	0
7	0	1	1	1
8	1	0	0	0
9	1	0	0	1

General Notes:

1. Pin A is first mate and last break during a tool change and is specified for use as 0 VDC and/or ground service.
2. The common for Tool ID is tied into the 24VDC line (Pin B). The Tool ID switches are Rated for service at 50V and 100 mA max. Refer to the Tool ID table for switch setup information.
3. The VA2-M is supplied with a Teach Plug (part # 9120-DE45-PLUG) to make the TSI circuit (Pin 1 to Pin 4 on TSI Connector). It is recommended that the customer integrate a mechanical limit switch to use with this circuit. The limit switch would be mounted to indicate that the robot and tool changer are in the stand, thus making the circuit and only allowing the tool changer to uncouple while in the stand. Contact ATI for further assistance.

NOTES: UNLESS OTHERWISE SPECIFIED.

DO NOT SCALE DRAWING. ALL DIMENSIONS ARE IN MILLIMETERS.

3rd ANGLE PROJECTION

ATI INDUSTRIAL AUTOMATION

1031 Goodworth Drive, Apex, NC 27539, USA
Tel: +1.919.772.0115 www.ati-ia.com
Fax: +1.919.772.8259 ISO 9001 Registered Company

PROPERTY OF ATI INDUSTRIAL AUTOMATION, INC. NOT TO BE REPRODUCED IN ANY MANNER EXCEPT ON ORDER OR WITH PRIOR WRITTEN AUTHORIZATION OF ATI.

DRAWN BY: B. Digeso, 4/14/05

CHECKED BY: R. Heavner, 4/14/05

PROJECT # 040611-1 SHEET 5 OF 6

TITLE: VA2 Family Module Drawing

SCALE	SIZE	DRAWING NUMBER	REVISION
1:2	B	9630-20-VA2 Family	11

VA2 Master with SA3Z1 Tool (0-F Tool ID)

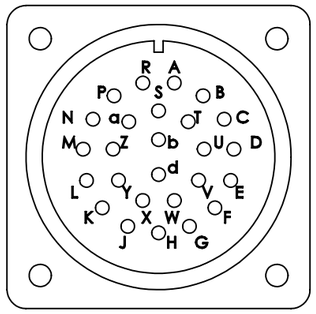

Amphenol Connector
Master Side
MS3102E28-12P
Face View
Scale 1:1

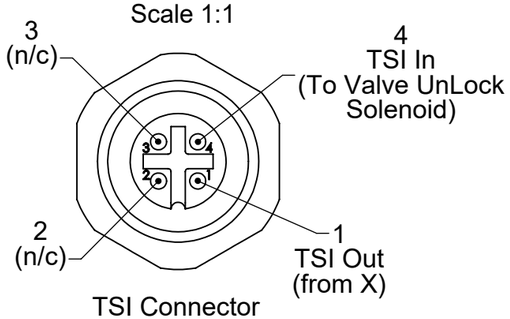

TSI Connector
VA2 Master Side
Scale 2:1
(4-Pin Euro)

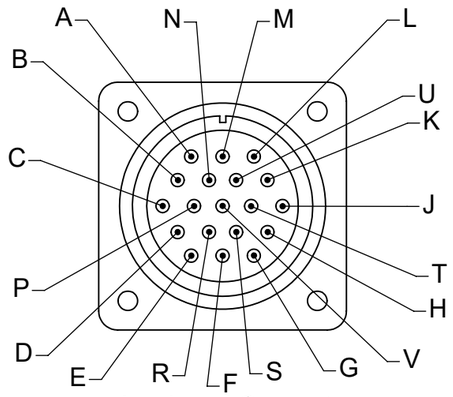

Amphenol Connector
Tool Side
MS3102E22-14S
Face View
Scale 1:1

VA2-M to SA3Z1-T
Pin Out

VA2 Master MS3102A28-15P Male Connector			SA3Z1 Tool MS3102E22-14S Female Connector	
0 Vdc Reference	A	>>	A	0 Vdc Reference
24 Vdc (I/P & Tool ID)	B	>>	B	24 Vdc (I/P & Tool ID)
available	C	>>	C	available
available	D	>>	D	available
available	E	>>	E	available
available	F	>>	F	available
available	G	>>	G	available
available	H	>>	H	available
available	J	>>	J	available
available	K	>>	K	available
available	L	>>	L	available
available	M	>>	M	available
available	N	>>	N	available
available	P	>>	P	available
available	R	>>	R	available
Tool ID, Bit Value 8	S	>>	S	not available
Tool ID, Bit Value 4	T	>>	T	not available
Tool ID, Bit Value 2	U	>>	U	not available
Tool ID, Bit Value 1	V	>>	V	not available
Lock O/P	W			
(1) TSI Connection	X			
not available	Y			
RTL #1	Z			
RTL #2	a			
Lock I/P	b			
Unlock I/P	d			

Tool ID 0-F

Controller Outputs		
Pin:	*Signal:*	*Description:*
A	0 VDC	Voltage Reference
B	24 VDC	Voltage Supply
W	24 VDC	Lock Solenoid Supply (Double Solenoid)
X	24 VDC	UnLock Solenoid Supply
Controller Inputs		
Pin:	*Signal:*	*Description:*
S	Tool ID	Bit Value 8 (See Table)
T	Tool ID	Bit Value 4 (See Table)
U	Tool ID	Bit Value 2 (See Table)
V	Tool ID	Bit Value 1 (See Table)
Z	RTL #1	Ready-To-Lock Input #1
a	RTL #2	Ready-To-Lock Input #2
b	Lock	Tool Changer Lock Input
d	Unlock	Tool Changer Unlock Input

TABLE 1: Tool ID Pinout

Switch Position	Pin S	Pin T	Pin U	Pin V
0	0	0	0	0
1	0	0	0	1
2	0	0	1	0
3	0	0	1	1
4	0	1	0	0
5	0	1	0	1
6	0	1	1	0
7	0	1	1	1
8	1	0	0	0
9	1	0	0	1
A	1	0	1	0
B	1	0	1	1
C	1	1	0	0
D	1	1	0	1
E	1	1	1	0
F	1	1	1	1

General Notes:

1. Pin A is first mate and last break during a tool change and is specified for use as 0 VDC and/or ground service.
2. The common for Tool ID is tied into the 24VDC line (Pin B). The Tool ID switches are Rated for service at 50V and 100 mA max. Refer to the Table 1: Tool ID Pinout for switch setup information.
3. The VA2-M is supplied with a Teach Plug (part # 9120-DE45-PLUG) to make the TSI circuit (Pin 1 to Pin 4 on TSI Connector). It is recommended that the customer integrate a mechanical limit switch to use with this circuit. The limit switch would be mounted to indicate that the robot and tool changer are in the stand, thus making the circuit and only allowing the tool changer to uncouple while in the stand. Contact ATI for further assistance.

NOTES: UNLESS OTHERWISE SPECIFIED.

DO NOT SCALE DRAWING. ALL DIMENSIONS ARE IN MILLIMETERS.

3rd ANGLE PROJECTION

ATI INDUSTRIAL AUTOMATION

1031 Goodworth Drive, Apex, NC 27539, USA
Tel: +1.919.772.0115 www.ati-ia.com
Fax: +1.919.772.8259 ISO 9001 Registered Company

PROPERTY OF ATI INDUSTRIAL AUTOMATION, INC. NOT TO BE REPRODUCED IN ANY MANNER EXCEPT ON ORDER OR WITH PRIOR WRITTEN AUTHORIZATION OF ATI.

DRAWN BY: B. Digeso, 4/14/05
CHECKED BY: R. Heavner, 4/14/05
PROJECT # 040611-1 SHEET 6 OF 6

TITLE: VA2 Family Module Drawing

SCALE	SIZE	DRAWING NUMBER	REVISION
1:2	B	9630-20-VA2 Family	11