Rev.	Description	Initiator	Date
06	ECO 21823; Updated Tool ID window and hardware.	LJH	4/29/2026

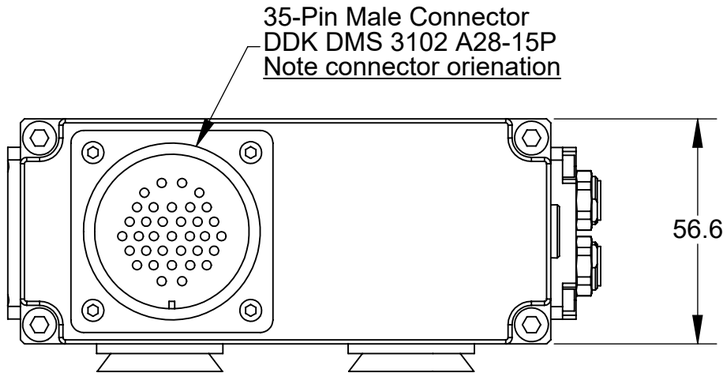

9121-VB11-M

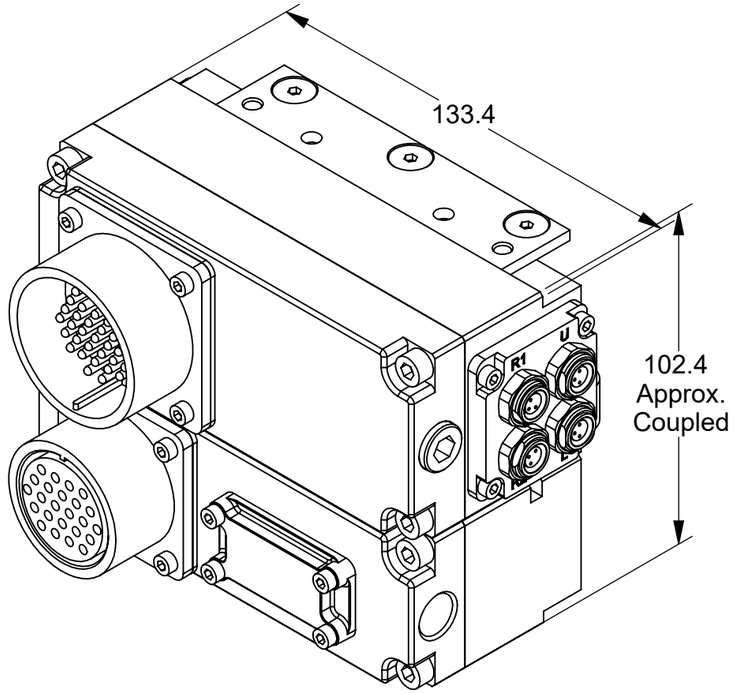

VB11 Master and Tool Coupled

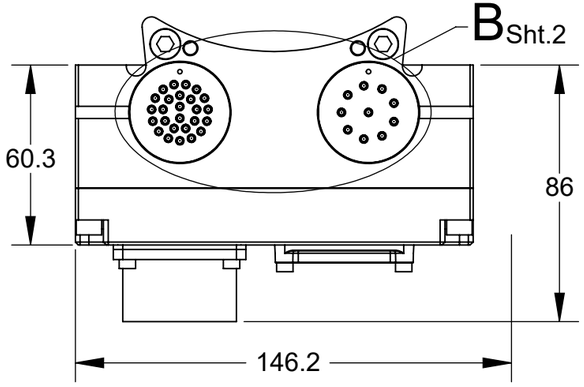

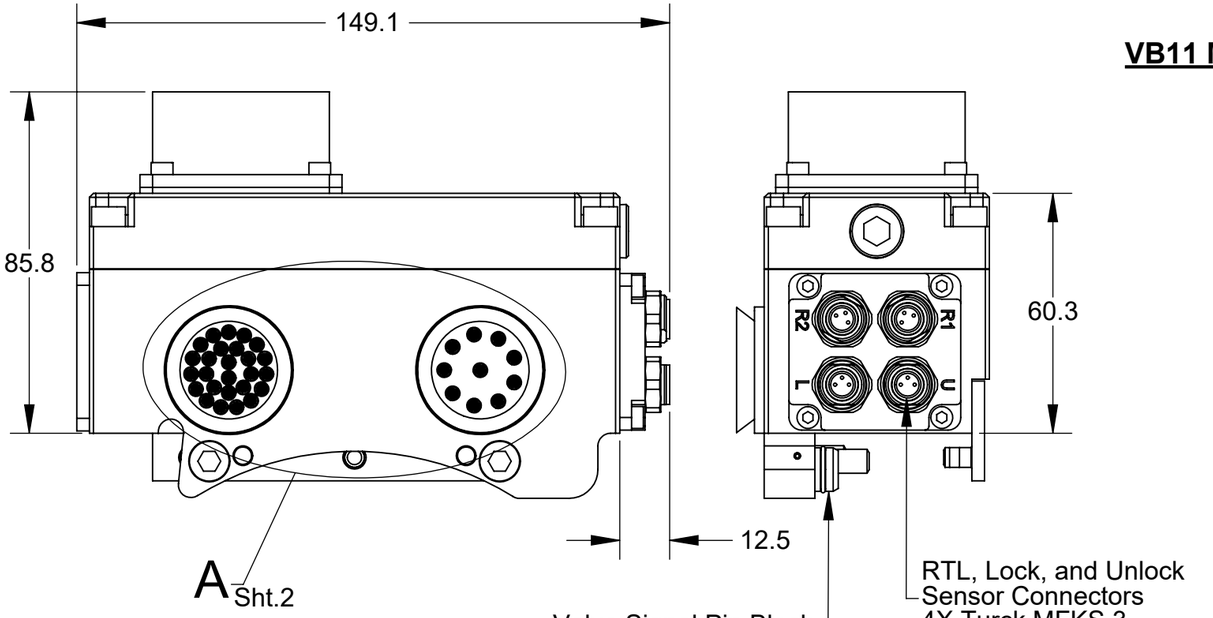

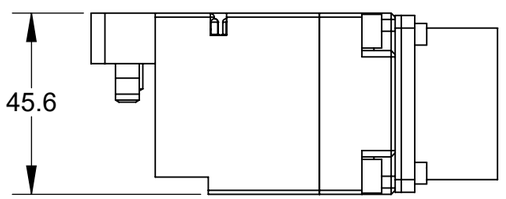

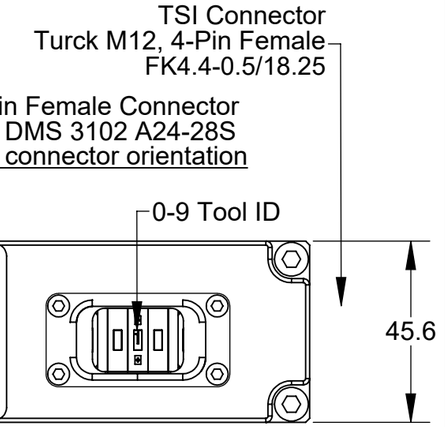

9121-VB11-T

Notes:
1. Pin Block pin assignment information on Sheet 2.
2. Connector details and pin assignment information on Sheet 3.
3. Electrical schematic and functional notes on Sheet 4.

NOTES: UNLESS OTHERWISE SPECIFIED.

DO NOT SCALE DRAWING. ALL DIMENSIONS ARE IN MILLIMETERS.

3rd ANGLE PROJECTION

ATI INDUSTRIAL AUTOMATION

1031 Goodworth Drive, Apex, NC 27539, USA
Tel: +1.919.772.0115 Email: info@ati-ia.com
Fax: +1.919.772.8259 www.ati-ia.com
ISO 9001 Registered Company

PROPERTY OF ATI INDUSTRIAL AUTOMATION, INC. NOT TO BE REPRODUCED IN ANY MANNER EXCEPT ON ORDER OR WITH PRIOR WRITTEN AUTHORIZATION OF ATI.

DRAWN BY: W. Berrocal, 10/01/09

CHECKED BY: D. Mushow, 02/11/10

PROJECT # 100204-3 SHEET 1 OF 4

TITLE: VB11 Module Drawing

SCALE	SIZE	DRAWING NUMBER	REVISION
1:2	B	9630-20-VB11	06

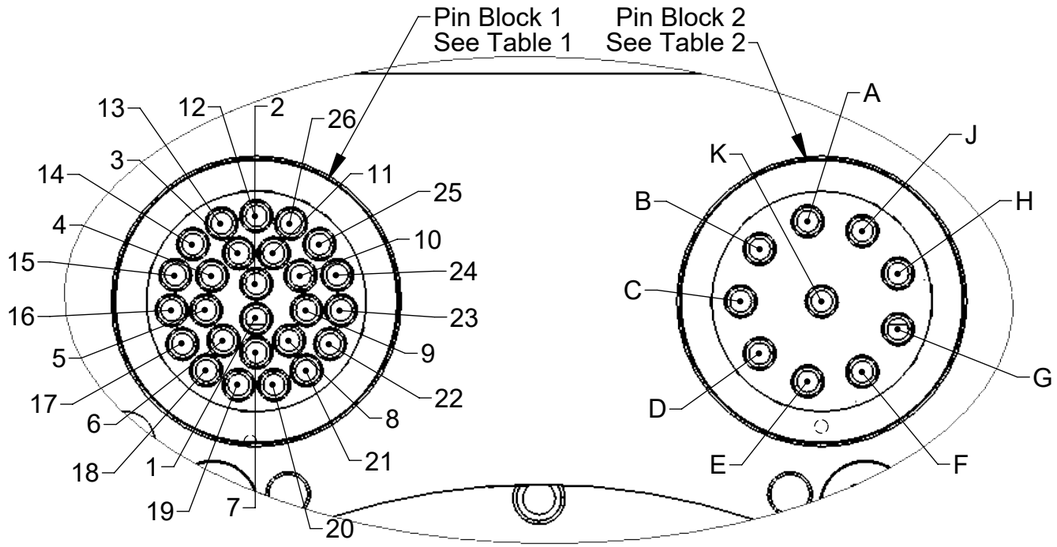

Master Side Pin Blocks
SCALE 1.5 : 1

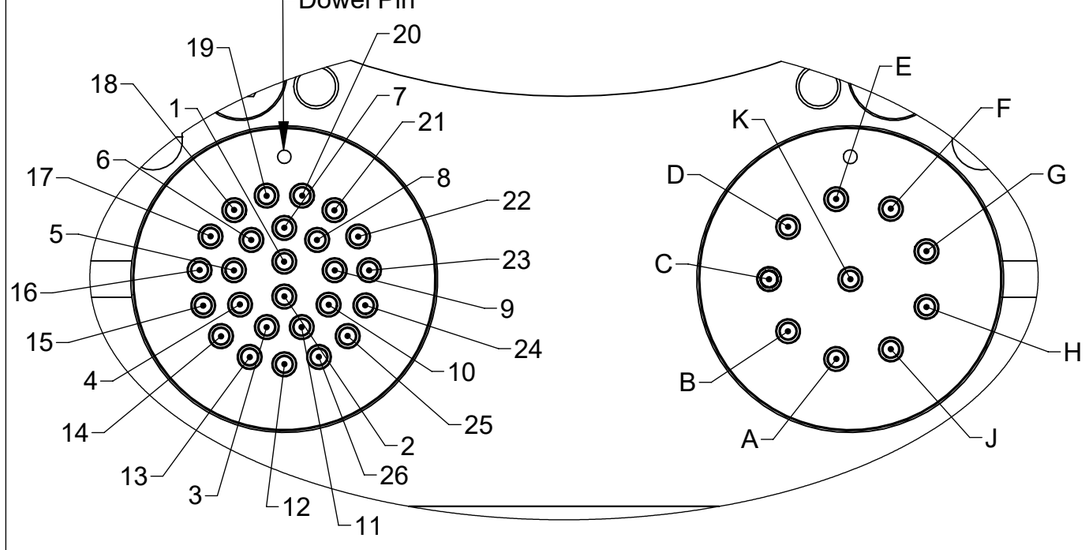

Tool Side Pin Blocks
DETAIL B
SCALE 1.5 : 1

Table 1: 26-Pin Pin Block	
1	Spare 1
2	Spare 2
3	Spare 3
4	Spare 4
5	Spare 5
6	Spare 6
7	Spare 7
8	Spare 8
9	Spare 9
10	Spare 10
11	Spare 11
12	Spare 12
13	Spare 13
14	Spare 14
15	Spare 15
16	Spare 16
17	Spare 17
18	Spare 18
19	Spare 19
20	Spare 20
21	Spare 21
22	Spare 22
23	N/C
24	N/C
25	N/C
26	N/C

Table 2: 10-Pin Pin Block	
A	TSI Out
B	N/C
C	Tool ID1
D	Tool ID2
E	Tool ID4
F	Tool ID8
G	TSI In
H	24V
J	N/C
K	0V

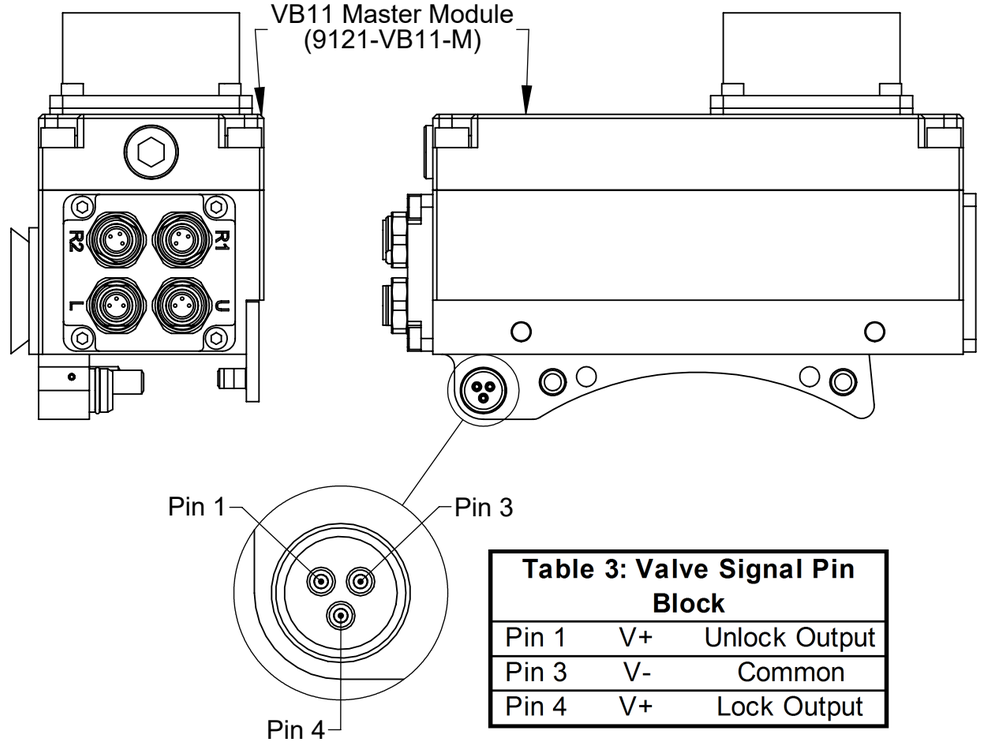

Table 3: Valve Signal Pin Block		
Pin 1	V+	Unlock Output
Pin 3	V-	Common
Pin 4	V+	Lock Output

NOTES: UNLESS OTHERWISE SPECIFIED.

DO NOT SCALE DRAWING. ALL DIMENSIONS ARE IN MILLIMETERS.

3rd ANGLE PROJECTION

ATI INDUSTRIAL AUTOMATION
1031 Goodworth Drive, Apex, NC 27539, USA
Tel: +1.919.772.0115 Email: info@ati-ia.com
Fax: +1.919.772.8259 www.ati-ia.com
ISO 9001 Registered Company

PROPERTY OF ATI INDUSTRIAL AUTOMATION, INC. NOT TO BE REPRODUCED IN ANY MANNER EXCEPT ON ORDER OR WITH PRIOR WRITTEN AUTHORIZATION OF ATI.

DRAWN BY: W. Berrocal, 10/01/09
CHECKED BY: D. Mushow, 02/11/10
PROJECT # 100204-3 SHEET 2 OF 4

TITLE: VB11 Module Drawing

SCALE	SIZE	DRAWING NUMBER	REVISION
2:3	B	9630-20-VB11	06

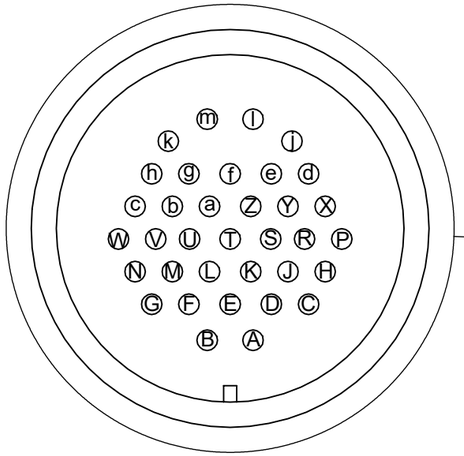

35-Pin Male Connector (Master)
DDK DMS 3102 A28-15P
Face View
Scale 3:2

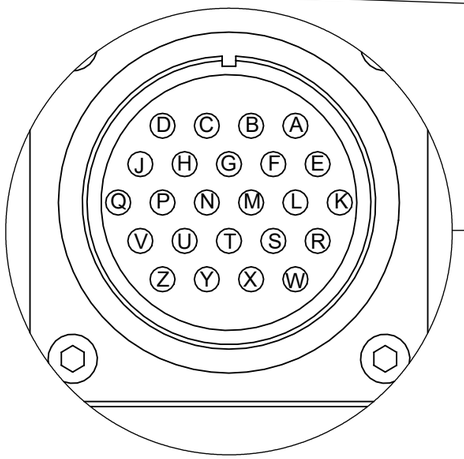

24-Pin Female Connector (Tool)
DDK DMS 3102 A24-28S
Face View
Scale 3:2

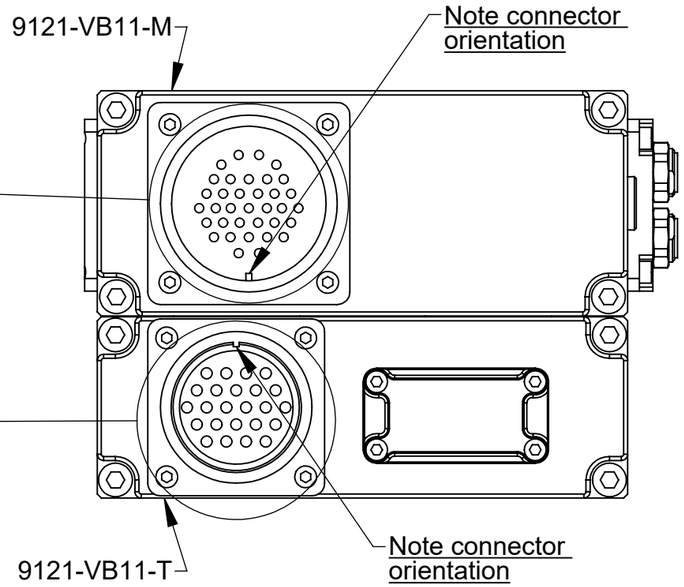

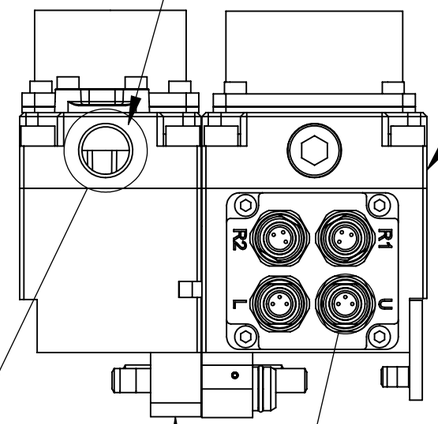

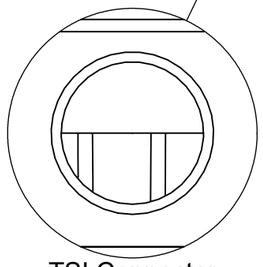

TSI Connector
Turck M12, 4-Pin Female
FK4.4-0.5/18.25
Face View
Scale 2:1

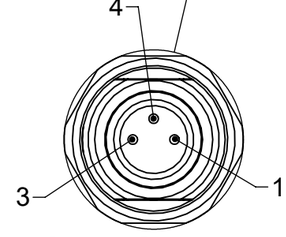

Sensor Connectors
4X Turck MFKS 3
Face View
Scale 2:1

Table 4: 35-Pin DDK Connector	
Pin	35-Pin Male Connector Master Side
A	Locked I/P
B	Unlocked I/P
C	RTL1 I/P
D	RTL2 I/P
E	RTLV I/P
F	Tool ID1
G	Tool ID2
H	Tool ID4
J	Tool ID8
K	Latch O/P
L	Unlatch O/P
M	Spare 1
N	Spare 2
P	Spare 3
R	Spare 4
S	Spare 5
T	Spare 6
U	Spare 7
V	Spare 8
W	Spare 9
X	Spare 10
Y	Spare 11
Z	Spare 12
a	Spare 13
b	Spare 14
c	Spare 15
d	Spare 16
e	Spare 17
f	Spare 18
g	Spare 19
h	Spare 20
j	Spare 21
k	Spare 22
l	24V
m	0V

Table 5: 24-Pin DDK Connector	
Pin	24-Pin Female Connector
A	Spare 1
B	Spare 2
C	Spare 3
D	Spare 4
E	Spare 5
F	Spare 6
G	Spare 7
H	Spare 8
J	Spare 9
K	Spare 10
L	Spare 11
M	Spare 12
N	Spare 13
P	Spare 14
Q	Spare 15
R	Spare 16
S	Spare 17
T	Spare 18
U	Spare 19
V	Spare 20
W	Spare 21
X	Spare 22
Y	24V
Z	0V

Table 6: TSI Connector	
1	N/C
2	TSI In
3	TSI Out
4	N/C

Table 7: Sensor Connectors	
1	V+
3	V-
4	Output

NOTES: UNLESS OTHERWISE SPECIFIED.

DO NOT SCALE DRAWING. ALL DIMENSIONS ARE IN MILLIMETERS.

3rd ANGLE PROJECTION

ATI INDUSTRIAL AUTOMATION

1031 Goodworth Drive, Apex, NC 27539, USA
Tel: +1.919.772.0115 Email: info@ati-ia.com
Fax: +1.919.772.8259 www.ati-ia.com
ISO 9001 Registered Company

PROPERTY OF ATI INDUSTRIAL AUTOMATION, INC. NOT TO BE REPRODUCED IN ANY MANNER EXCEPT ON ORDER OR WITH PRIOR WRITTEN AUTHORIZATION OF ATI.

DRAWN BY: W. Berrocal, 10/01/09

CHECKED BY: D. Mushow, 02/11/10

PROJECT # 100204-3 SHEET 3 OF 4

TITLE: VB11 Module Drawing

SCALE	SIZE	DRAWING NUMBER	REVISION
2:3	B	9630-20-VB11	06

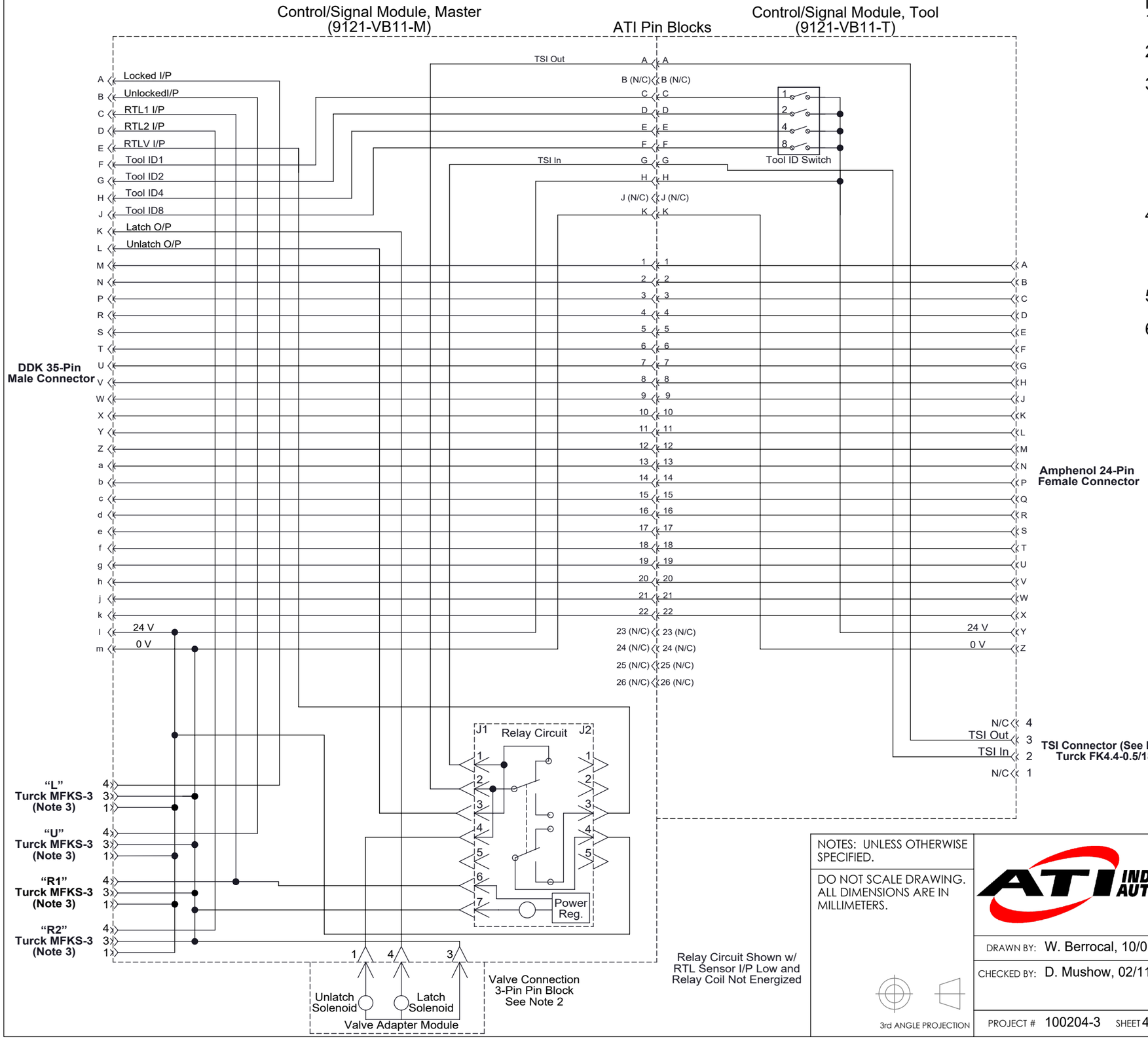

Notes:

1. The complete tool changer package comes equipped with external cables that are connected to the sensors.
2. An internal pin block is used to transmit the Latch/Unlatch signal to the valve adapter, as shown in the schematic.
3. The Tool Stand Interlock (TSI) circuit is provided to ONLY allow tool release while in the stand or storage location as indicated by actuation of a customer-integrated switch. It is suggested that the customer integrate a single pole, single throw (Normally Open, spring return) limit switch to work with this feature. The limit switch should be mounted to the end effector in such a way that the switch is "made" only when the tool is in the stand or storage location.
4. The RTL1 sensor is very important to the operation of the TSI feature and should be monitored for failure. The RTLV input is provided for fault monitoring of this circuit. Please consult the product manual for operation and fault monitoring recommendations.
5. Refer to Table 8 for the Tool ID output (Note: Use Pin 'l' of the 35-Pin Connector (Master Side) as common).
6. Tool-ID Switch is rated for 0.1A / 30VDC.

Table 8: Tool ID Binary Output

Switch Position	35-Pin Connector (Master)			
	Pin J	Pin H	Pin G	Pin F
0	0	0	0	0
1	0	0	0	1
2	0	0	1	0
3	0	0	1	1
4	0	1	0	0
5	0	1	0	1
6	0	1	1	0
7	0	1	1	1
8	1	0	0	0
9	1	0	0	1

NOTES: UNLESS OTHERWISE SPECIFIED.

DO NOT SCALE DRAWING. ALL DIMENSIONS ARE IN MILLIMETERS.

3rd ANGLE PROJECTION

ATI INDUSTRIAL AUTOMATION

1031 Goodworth Drive, Apex, NC 27539, USA
Tel: +1.919.772.0115 Email: info@ati-ia.com
Fax: +1.919.772.8259 www.ati-ia.com
ISO 9001 Registered Company

PROPERTY OF ATI INDUSTRIAL AUTOMATION, INC. NOT TO BE REPRODUCED IN ANY MANNER EXCEPT ON ORDER OR WITH PRIOR WRITTEN AUTHORIZATION OF ATI.

DRAWN BY: W. Berrocal, 10/01/09

CHECKED BY: D. Mushow, 02/11/10

PROJECT # 100204-3 SHEET 4 OF 4

TITLE: VB11 Module Drawing

SCALE	SIZE	DRAWING NUMBER	REVISION
1:1	B	9630-20-VB11	06