Rev.	Description	Initiator	Date
04	ECO 21814; Updated to reflect changes to 9121-VB12-T.	DS	9/5/2024

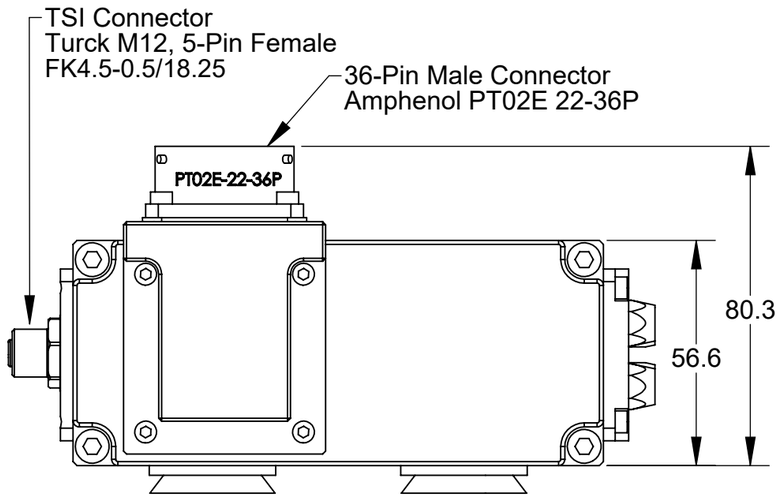

9121-VB13-M

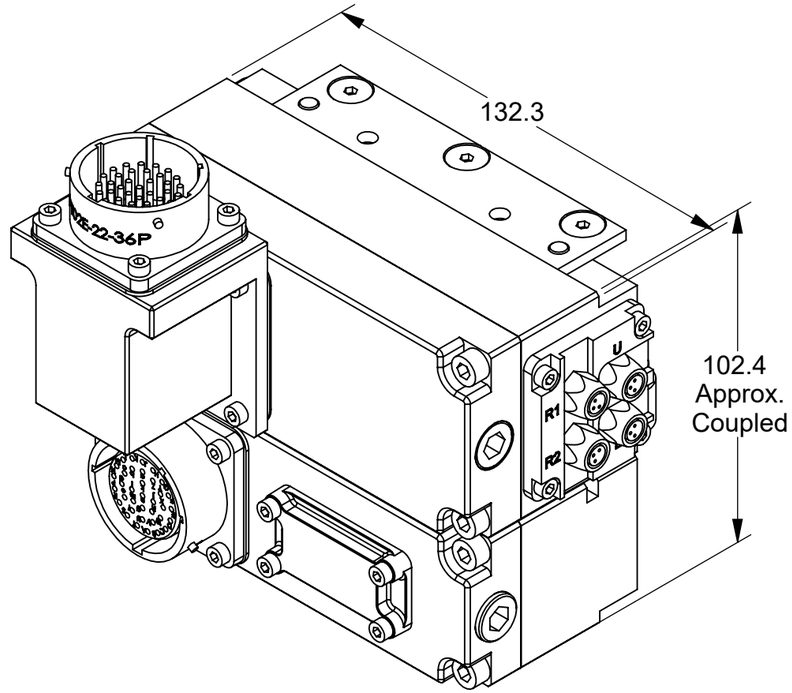

VB13 Master/ VB12 Tool Coupled

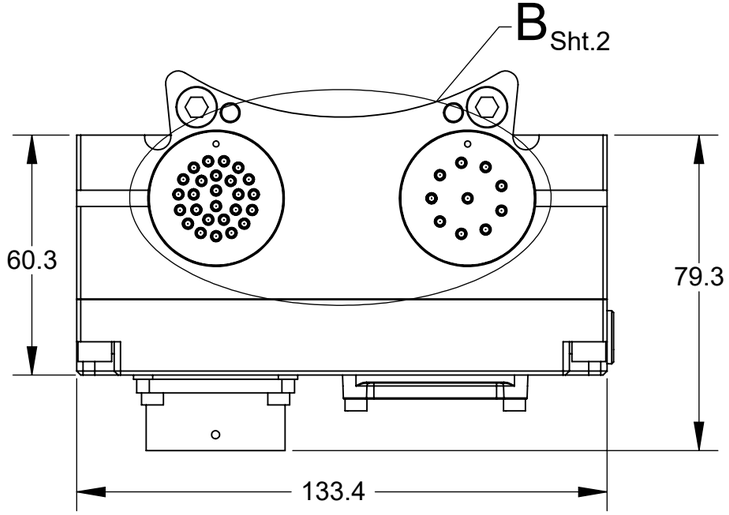

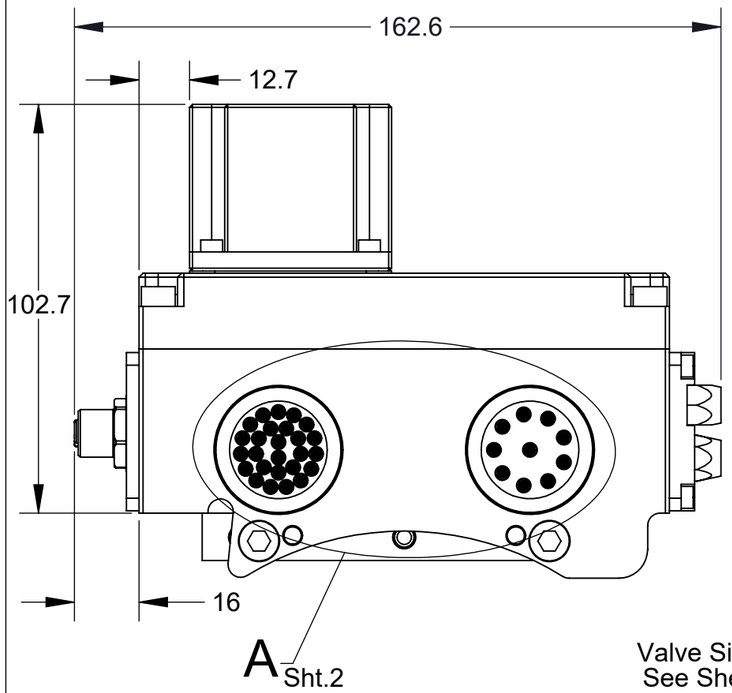

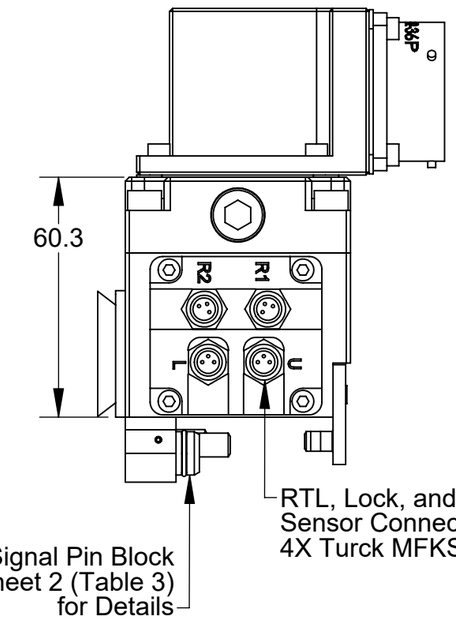

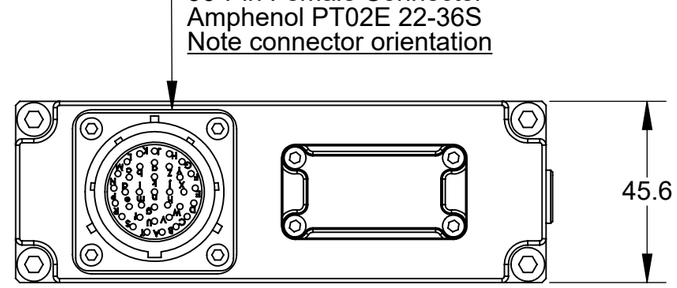

9121-VB12-T

Notes:
1. Pin Block pin assignment information on Sheet 2.
2. Connector details and pin assignment information on Sheet 3.
3. Electrical schematic and functional notes on Sheets 4 and 5.

NOTES: UNLESS OTHERWISE SPECIFIED.

DO NOT SCALE DRAWING. ALL DIMENSIONS ARE IN MILLIMETERS.

3rd ANGLE PROJECTION

ATI INDUSTRIAL AUTOMATION

1031 Goodworth Drive, Apex, NC 27539, USA
Tel: +1.919.772.0115 www.ati-ia.com
Fax: +1.919.772.8259 ISO 9001 Registered Company

PROPERTY OF ATI INDUSTRIAL AUTOMATION, INC. NOT TO BE REPRODUCED IN ANY MANNER EXCEPT ON ORDER OR WITH PRIOR WRITTEN AUTHORIZATION OF ATI.

DRAWN BY: W. Berrocal, 12/7/12

CHECKED BY: L. Jamshidi, 12/10/12

PROJECT # 121024-1 SHEET 1 OF 5

TITLE: VB13-M/VB12-T Module Assembly

SCALE	SIZE	DRAWING NUMBER	REVISION
1:2	B	9630-20-VB13M VB12T	04

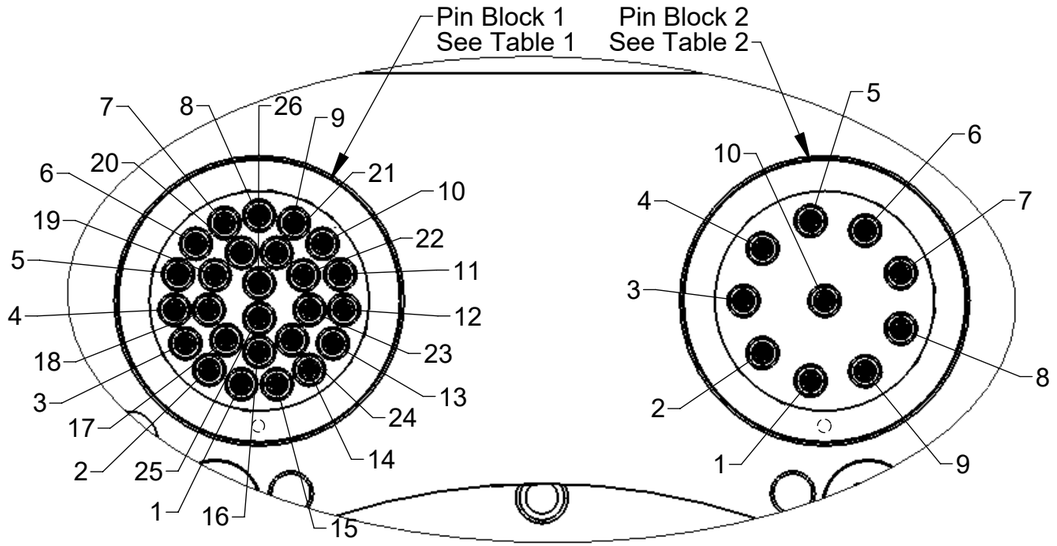

Master Side Pin Blocks
DETAIL A
SCALE 1.5 : 1

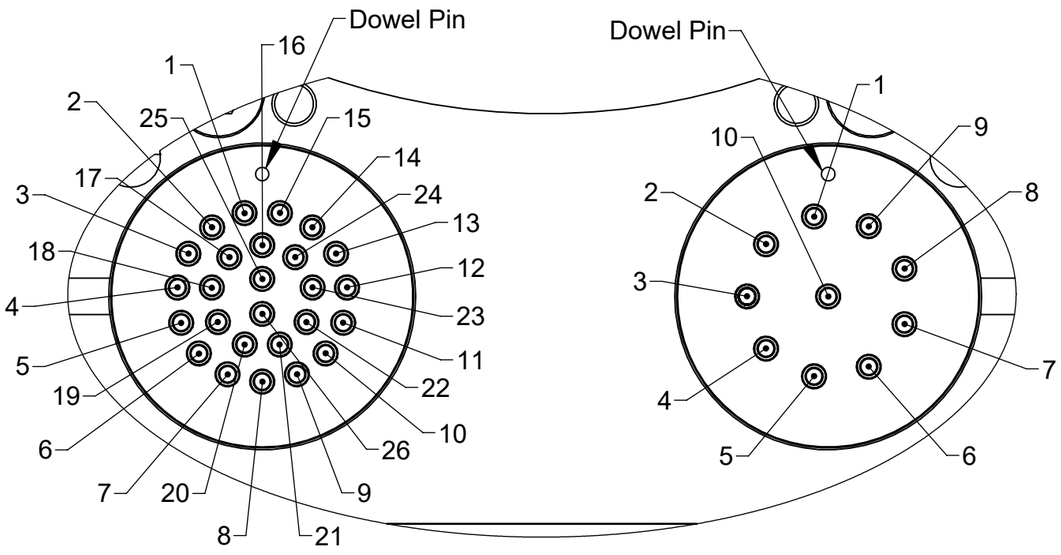

Tool Side Pin Blocks
DETAIL B
SCALE 1.5 : 1

Table 1: 26-Pin Pin Block	
1	Available 1
2	Available 2
3	Available 3
4	Available 4
5	Available 5
6	Available 6
7	Available 7
8	Available 8
9	24V
10	Available 9
11	24V
12	Available 10
13	Available 11
14	Available 12
15	Available 13
16	Available 14
17	Available 15
18	Available 16
19	Available 17
20	Available 18
21	Available 19
22	Available 20
23	Available 21
24	Available 22
25	Available 23
26	Available 24

Table 2: 10-Pin Pin Block	
1	Available 25
2	Available 26
3	Available 27
4	Available 28
5	N/C
6	Tool Presence In 1 (24 V)
7	N/C
8	Tool Presence In 2 (24V)
9	N/C
10	N/C

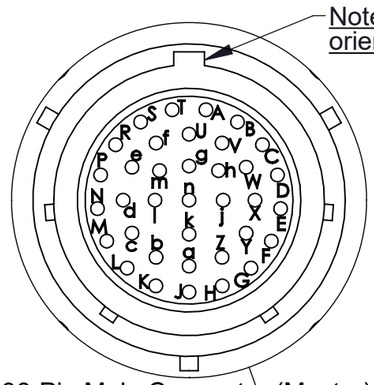

36-Pin Male Connector (Master)
Amphenol PT02E 22-36P
Scale 2:1

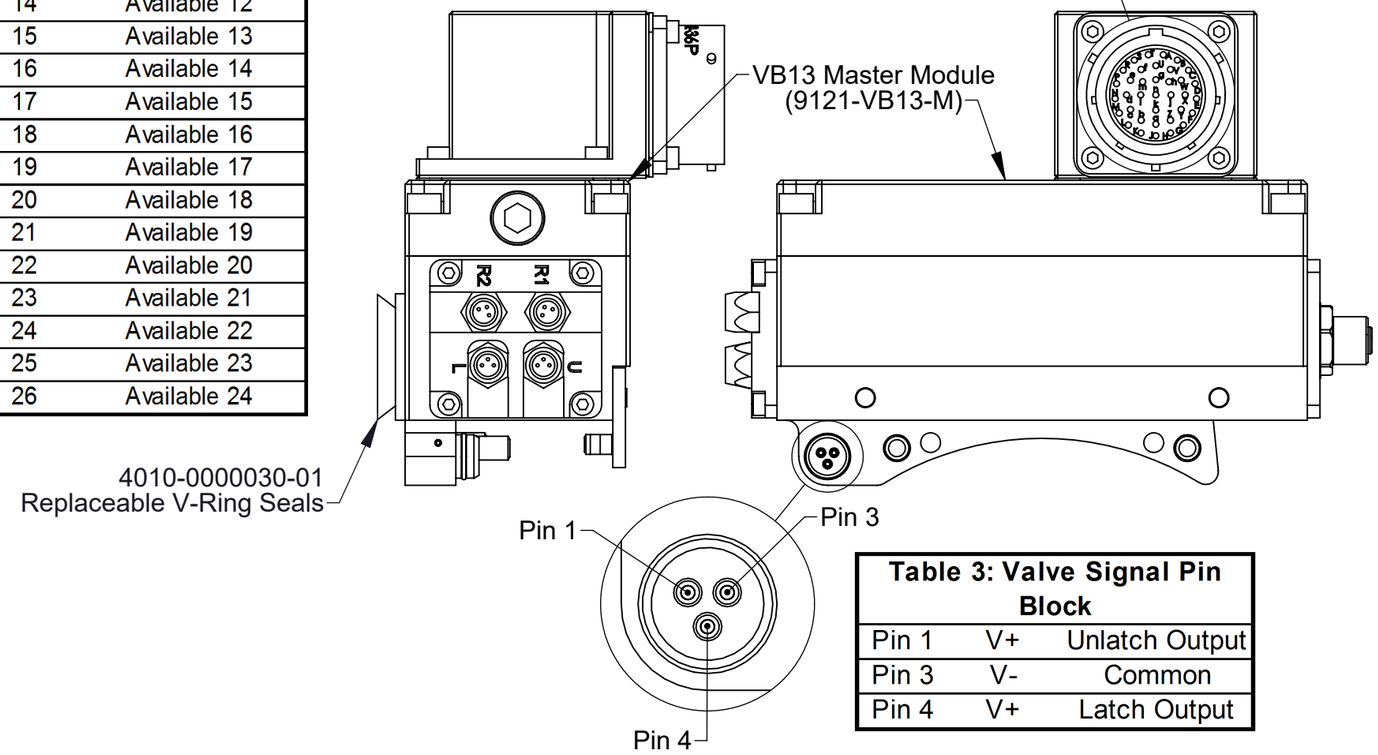

Table 3: Valve Signal Pin Block		
Pin 1	V+	Unlatch Output
Pin 3	V-	Common
Pin 4	V+	Latch Output

NOTES: UNLESS OTHERWISE SPECIFIED.

DO NOT SCALE DRAWING. ALL DIMENSIONS ARE IN MILLIMETERS.

3rd ANGLE PROJECTION

ATI INDUSTRIAL AUTOMATION
1031 Goodworth Drive, Apex, NC 27539, USA
Tel: +1.919.772.0115 www.ati-ia.com
Fax: +1.919.772.8259 ISO 9001 Registered Company

PROPERTY OF ATI INDUSTRIAL AUTOMATION, INC. NOT TO BE REPRODUCED IN any MANNER EXCEPT ON ORDER OR WITH PRIOR WRITTEN AUTHORIZATION OF ATI.

DRAWN BY: W. Berrocal, 12/7/12
CHECKED BY: L. Jamshidi, 12/10/12
PROJECT # 121024-1 SHEET 2 OF 5

TITLE: VB13-M/VB12-T Module Assembly

SCALE	SIZE	DRAWING NUMBER	REVISION
2:3	B	9630-20-VB13M VB12T	04

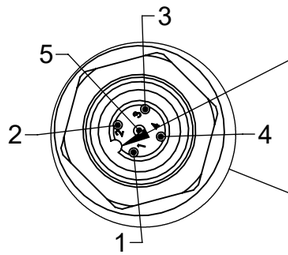

TSI Connector
M12, 5-Pin Female
Turck FK4.5-0.5/18.25
Scale 3:2

Table 4: TSI Connector	
1	Sensor V+
2	Status (N/C)
3	Sensor V-
4	TSI In
5	TSI Out

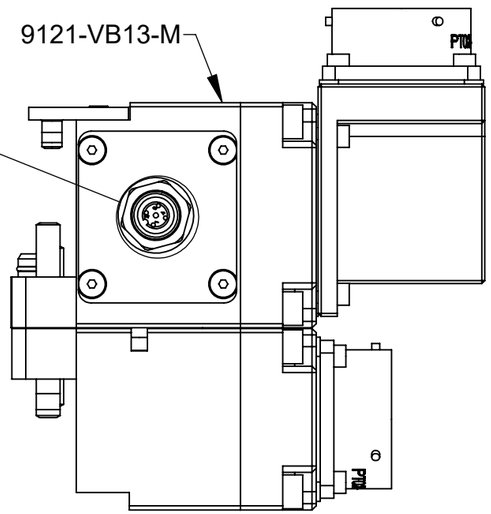

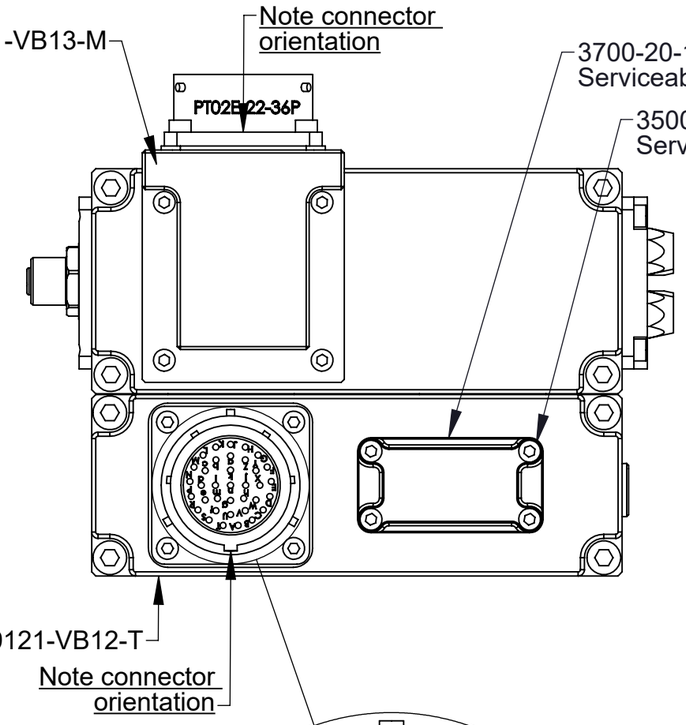

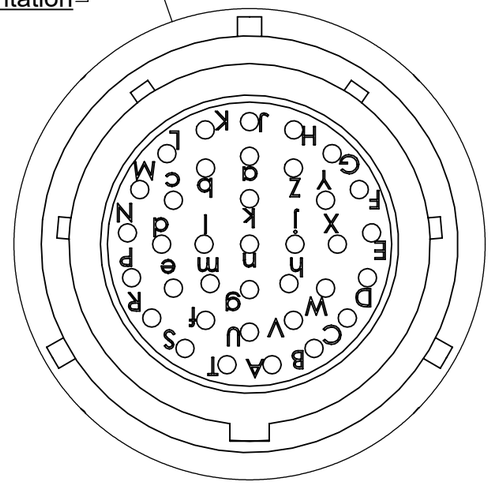

36-Pin Female Connector (Tool)
Amphenol PT02E 22-36S
Scale 2:1

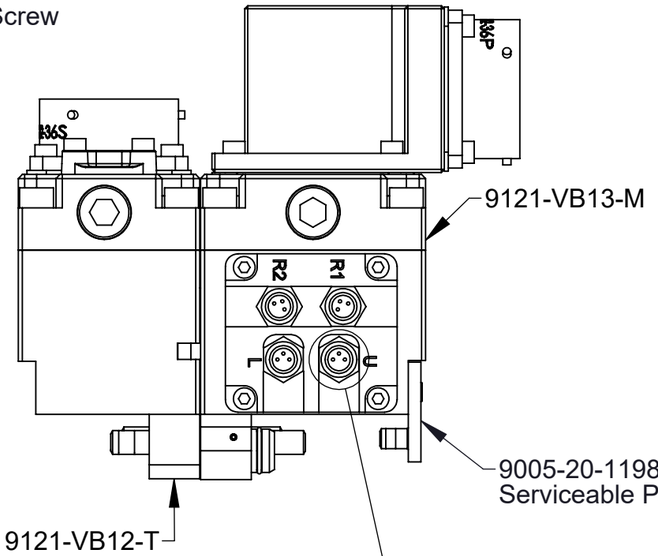

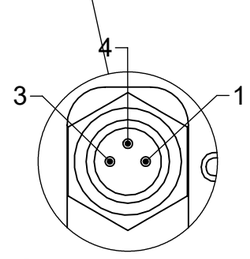

Sensor Connectors
4X Turck MFKS 3
Scale 2:1

Table 5: Sensor Connectors	
1	V+
3	V-
4	Output

NOTES: UNLESS OTHERWISE SPECIFIED.

DO NOT SCALE DRAWING. ALL DIMENSIONS ARE IN MILLIMETERS.

3rd ANGLE PROJECTION

ATI INDUSTRIAL AUTOMATION

1031 Goodworth Drive, Apex, NC 27539, USA
Tel: +1.919.772.0115 www.ati-ia.com
Fax: +1.919.772.8259 ISO 9001 Registered Company

PROPERTY OF ATI INDUSTRIAL AUTOMATION, INC. NOT TO BE REPRODUCED IN ANY MANNER EXCEPT ON ORDER OR WITH PRIOR WRITTEN AUTHORIZATION OF ATI.

DRAWN BY: W. Berrocal, 12/7/12

CHECKED BY: L. Jamshidi, 12/10/12

PROJECT # 121024-1 SHEET 3 OF 5

TITLE: VB13-M/VB12-T Module Assembly

SCALE	SIZE	DRAWING NUMBER	REVISION
2:3	B	9630-20-VB13M VB12T	04

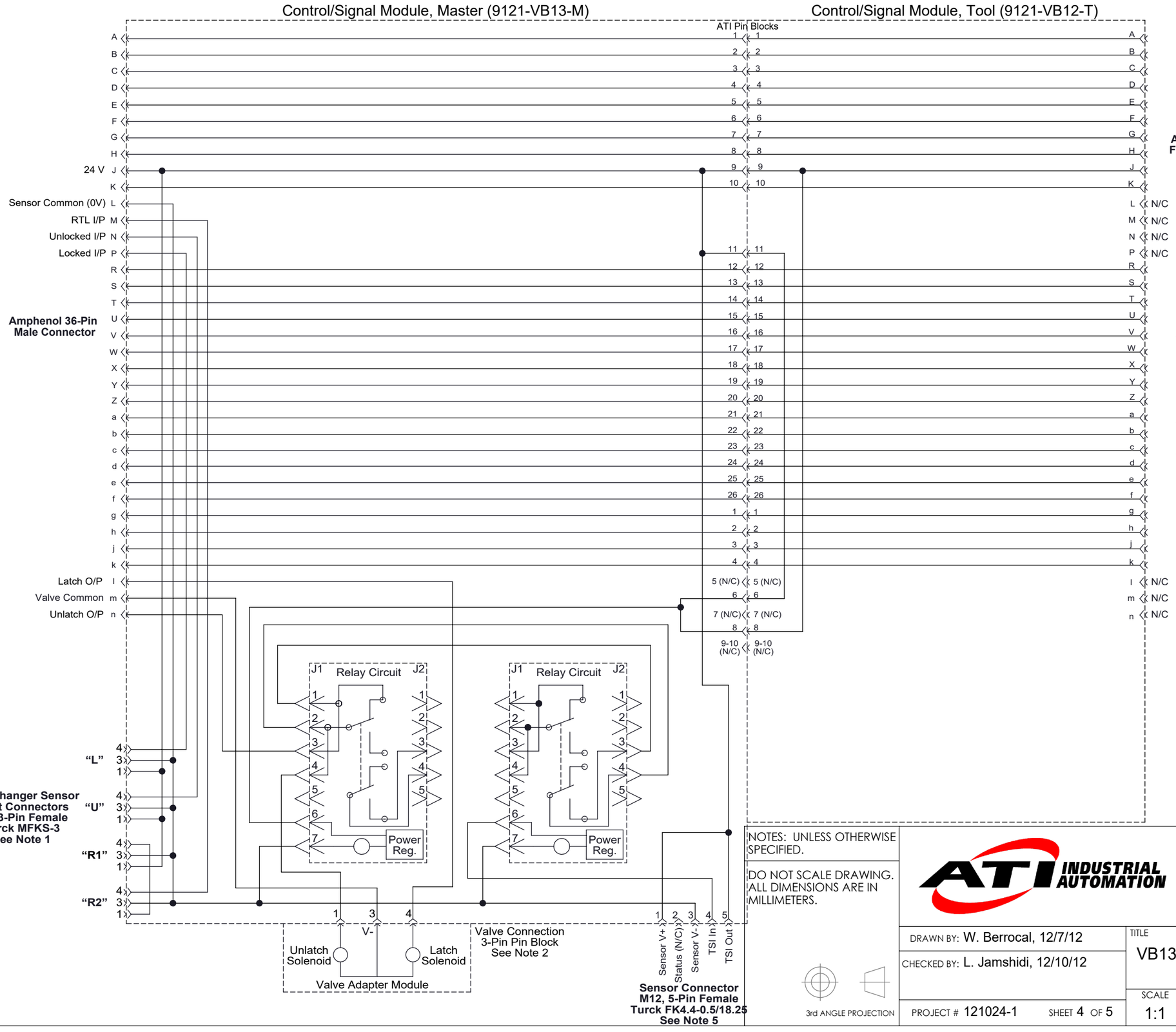

Notes:

1. The complete tool changer package comes equipped with external cables that are connected to the sensors.
2. An internal pin block is used to transmit the Latch/Unlatch signal to the valve adapter, as shown in the schematic.
3. Note that the VB13 Master module is designed to operate with ONLY PNP sensors. The Ready-to-Lock sensors are wired in series.
4. The Latch and Unlatch command signals must be sourcing, NOT sinking.
5. The VB13 Master module is designed to work with RFID, mechanical, or magnetically based safety switches (switches available separately, refer to Sheet 5). The safety switch must be mounted to the Master side of the Tool changer. With RFID and magnetic switches, the transponder/actuator must be mounted to the tool stand.

NOTES: UNLESS OTHERWISE SPECIFIED.

DO NOT SCALE DRAWING. ALL DIMENSIONS ARE IN MILLIMETERS.

3rd ANGLE PROJECTION

ATI INDUSTRIAL AUTOMATION

1031 Goodworth Drive, Apex, NC 27539, USA
Tel: +1.919.772.0115 www.ati-ia.com
Fax: +1.919.772.8259 ISO 9001 Registered Company

PROPERTY OF ATI INDUSTRIAL AUTOMATION, INC. NOT TO BE REPRODUCED IN ANY MANNER EXCEPT ON ORDER OR WITH PRIOR WRITTEN AUTHORIZATION OF ATI.

DRAWN BY: W. Berrocal, 12/7/12

CHECKED BY: L. Jamshidi, 12/10/12

PROJECT # 121024-1 SHEET 4 OF 5

TITLE: VB13-M/VB12-T Module Assembly

SCALE	SIZE	DRAWING NUMBER	REVISION
1:1	B	9630-20-VB13M VB12T	04

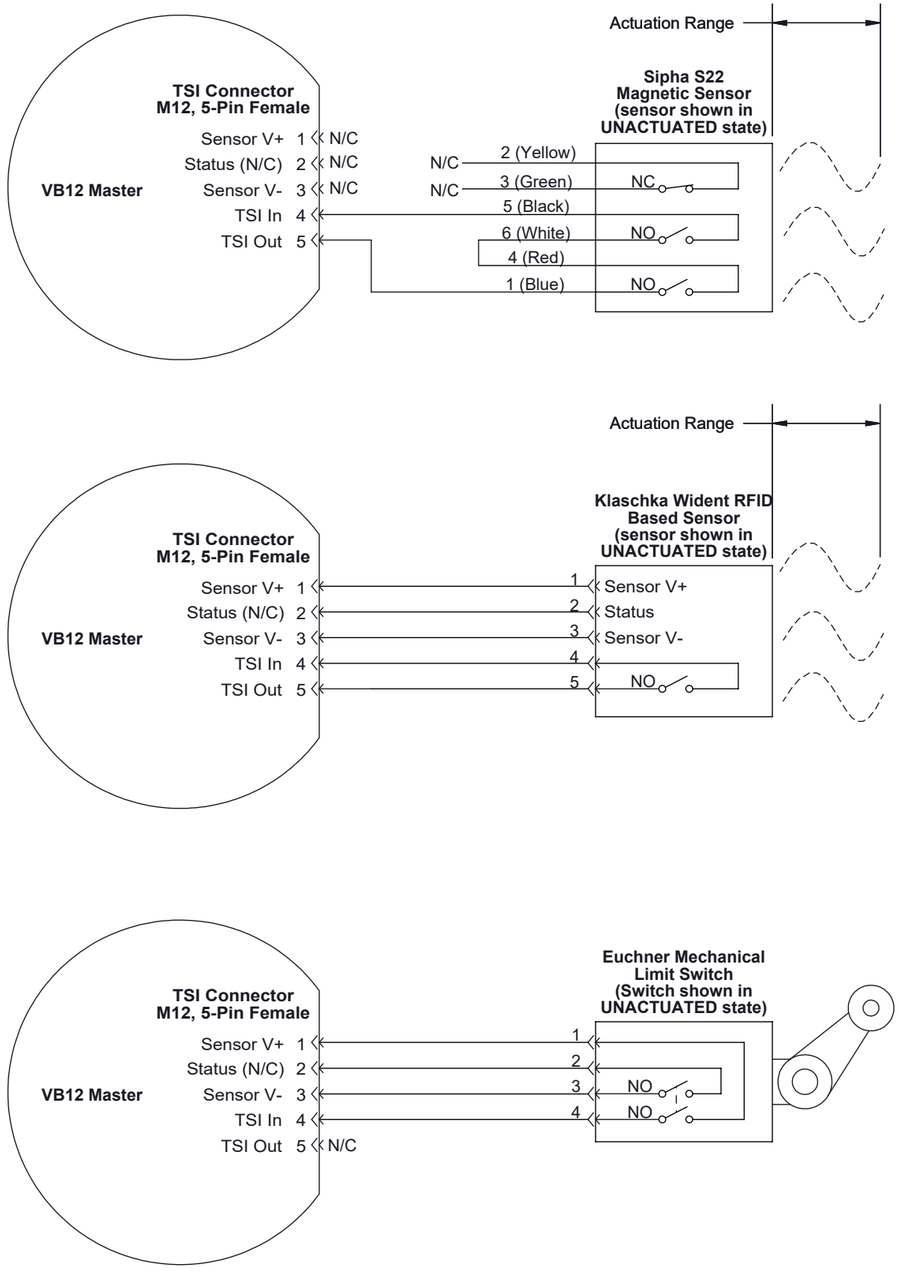

Magnetic Sensor Notes:

1. With RFID and magnetically based safety sensors, the unlock circuit will be completed when the sensor is in close proximity to the actuator. With the actuator mounted on the tool stand, the sensor will insure that a Tool can only be released at the tool stand.
2. ATI part numbers for the Allen-Bradley Sipha magnetic sensor are as follows:
   - Sipha S22/S20 Sensor and Actuator: 8600-440N-S32023-01
   - Sipha S22 Sensor Only: 8600-440N-S32023
   - Sipha S20 Actuator Only: 8605-440N-A32020

   Note: The Sipha sensor comes pre-assembled with a 3m long cable and M12, 5-pin connector.

RFID Sensor Notes:

1. With RFID based safety sensors, the unlock circuit will be completed when the sensor is in close proximity to the transponder. With the transponder mounted on the tool stand, the sensor will insure that a Tool can only be released at the tool stand.
2. The sensor is connected to the VB12 Master module via the 5-pin M12 connector (the cable to the sensor is not included).
3. ATI part number for the Klaschka WIDENT safety sensor mounting hardware is as follows:
   - Transponder Bracket Assembly: 9121-TSL-KT-5841

Mechanical Limit Switch Notes:

1. Using a mechanical limit switch, the unlock circuit will be completed only when the switch has been actuated by a Tool Stand mounted cam or trip dog. It is suggested that a double pole, single throw (Normally Open, spring return) limit switch is utilized. The limit switch should be mounted to the end effector in such a way that the switch is "made" only when the Tool is in the stand or storage location.
2. The limit switch is connected to the VB12 Master module via the 5-pin M12 connector (the cable to the limit switch is not included).
3. ATI part number for the recommended Euchner limit switch is as follows:
   - Euchner Safety Switch NZ1HS-3131-M: 8510-9909999-01

NOTES: UNLESS OTHERWISE SPECIFIED.

DO NOT SCALE DRAWING. ALL DIMENSIONS ARE IN MILLIMETERS.

3rd ANGLE PROJECTION

INDUSTRIAL AUTOMATION

1031 Goodworth Drive, Apex, NC 27539, USA
Tel: +1.919.772.0115 www.ati-ia.com
Fax: +1.919.772.8259 ISO 9001 Registered Company

PROPERTY OF ATI INDUSTRIAL AUTOMATION, INC. NOT TO BE REPRODUCED IN ANY MANNER EXCEPT ON ORDER OR WITH PRIOR WRITTEN AUTHORIZATION OF ATI.

DRAWN BY: W. Berrocal, 12/7/12

CHECKED BY: L. Jamshidi, 12/10/12

PROJECT # 121024-1 SHEET 5 OF 5

TITLE: VB13-M/VB12-T Module Assembly

SCALE	SIZE	DRAWING NUMBER	REVISION
1:1	B	9630-20-VB13M VB12T	04