VF2-M/VF3-T Dimensions

REV.	DESCRIPTION	INITIATOR	DATE
07	Eco 21823; Updated Tool ID window and hardware.	LJH	5/1/2026

"DANGER!" - Electrical Shock Hazard

This module has a Voltage of 50V or greater, NO contact should be attempted before removing power. This especially includes separation or insertion of the mating connectors or any contact with the tool changer or its components.

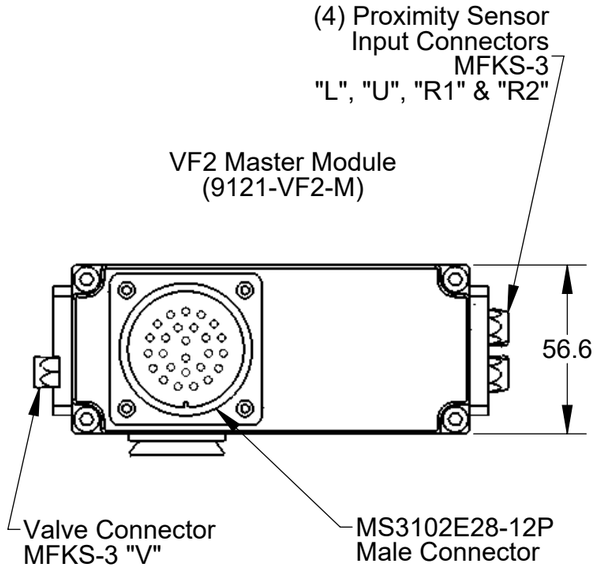

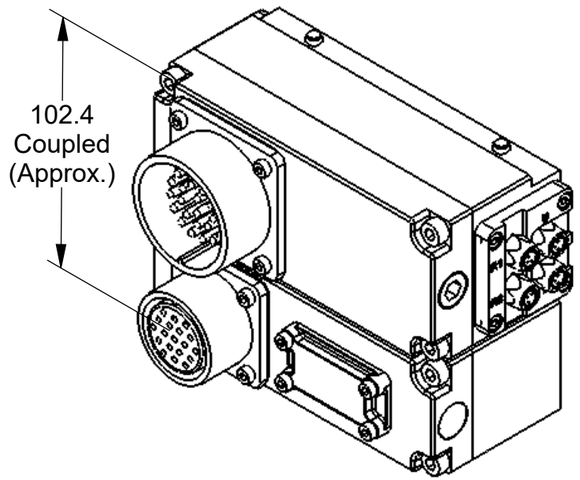

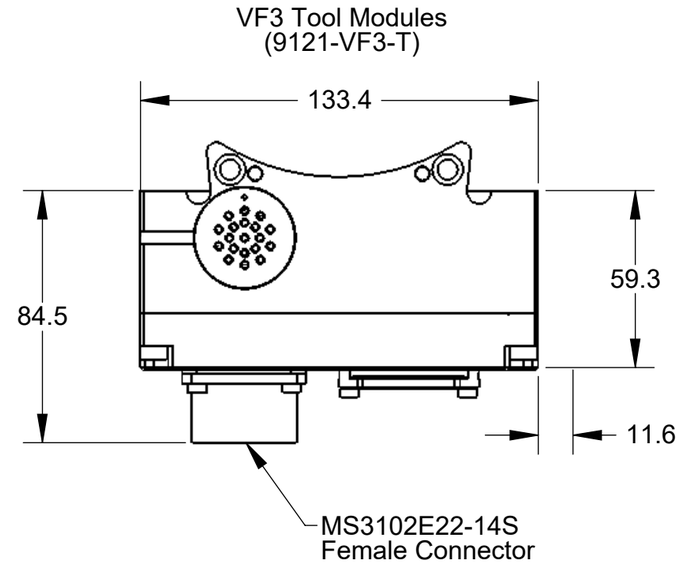

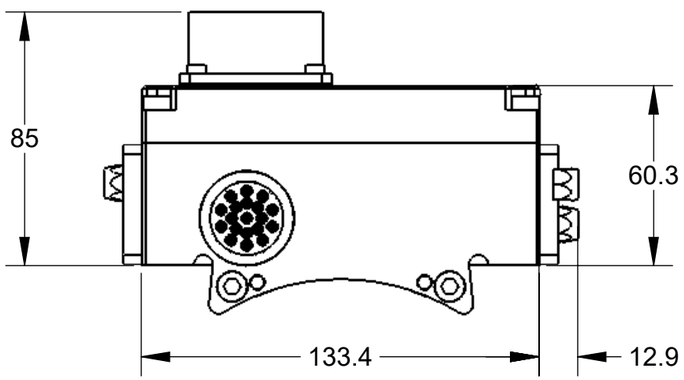

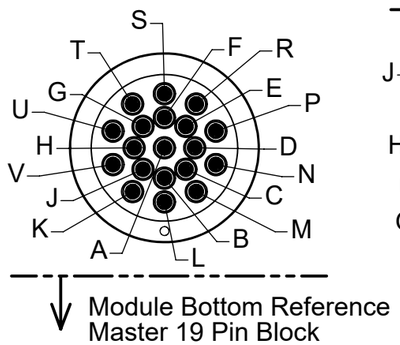

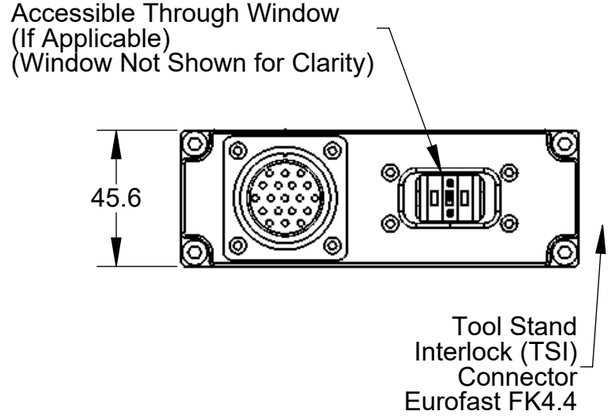

Sheet Configurations
Sheet 1: VF2-M/VF3-T Dimensions
Sheet 2: VF2-M/VF3-T Serviceable Parts
Sheet 3: VF2 Master with VF3 Tool (0-9 Tool ID)

NOTES: UNLESS OTHERWISE SPECIFIED.

DO NOT SCALE DRAWING. ALL DIMENSIONS ARE IN MILLIMETERS.

3rd ANGLE PROJECTION

ATI INDUSTRIAL AUTOMATION
1031 Goodworth Drive, Apex, NC 27539, USA
Tel: +1.919.772.0115 www.ati-ia.com
Fax: +1.919.772.8259 ISO 9001 Registered Company

PROPERTY OF ATI INDUSTRIAL AUTOMATION, INC. NOT TO BE REPRODUCED IN ANY MANNER EXCEPT ON ORDER OR WITH PRIOR WRITTEN AUTHORIZATION OF ATI.

DRAWN BY: B.Digeso, 12/15/05
CHECKED BY: R. Heavner, 12/16/05
PROJECT # 051216-1 SHEET 1 OF 3

TITLE: VF2M VF3T Module Drawing

SCALE	SIZE	DRAWING NUMBER	REVISION
1:2	B	9630-20-VF2M VF3T	07

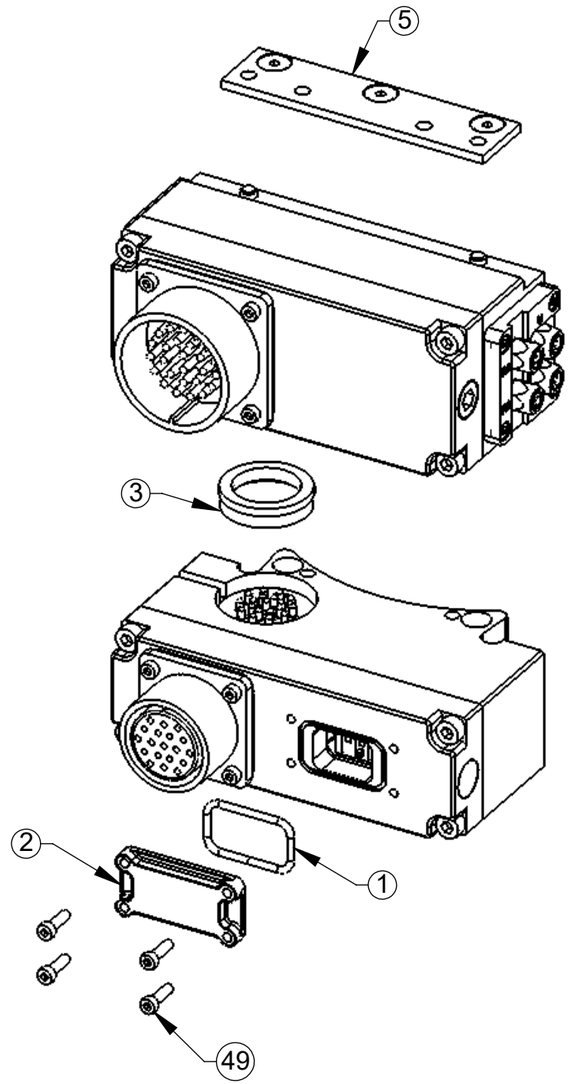

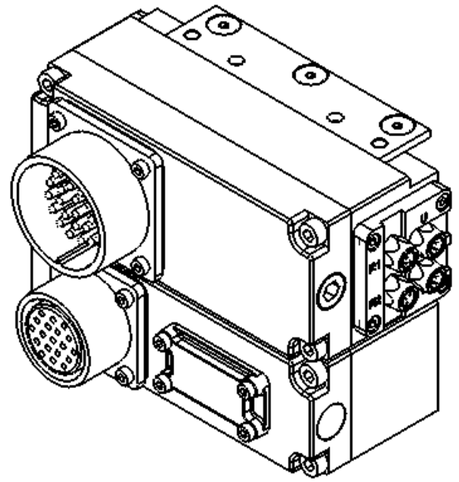

VF2-M/VF3-T Serviceable Parts

ITEM NO.	QTY.	PART NUMBER	DESCRIPTION
1	1	3410-0001092-01	O-ring AS568-023
2	1	3700-20-11881	Thick Window for DP/DE45 Master, Injection Molded
3	1	4010-0000030-01	V-Ring Seal
5	1	9005-20-1198	Master Cleat Assembly
49	4	3500-1058012-15	M3-0.5 x 12mm SHCS, Blue

NOTES: UNLESS OTHERWISE SPECIFIED.

DO NOT SCALE DRAWING. ALL DIMENSIONS ARE IN MILLIMETERS.

3rd ANGLE PROJECTION

ATI INDUSTRIAL AUTOMATION
1031 Goodworth Drive, Apex, NC 27539, USA
Tel: +1.919.772.0115 www.ati-ia.com
Fax: +1.919.772.8259 ISO 9001 Registered Company

PROPERTY OF ATI INDUSTRIAL AUTOMATION, INC. NOT TO BE REPRODUCED IN ANY MANNER EXCEPT ON ORDER OR WITH PRIOR WRITTEN AUTHORIZATION OF ATI.

DRAWN BY: B.Digeso, 12/15/05

CHECKED BY: R. Heavner, 12/16/05

PROJECT # 051216-1 SHEET 2 OF 3

TITLE: VF2M VF3T Module Drawing

SCALE	SIZE	DRAWING NUMBER	REVISION
1:2	B	9630-20-VF2M VF3T	07

VF2 Master with VF3 Tool (0-9 Tool ID)

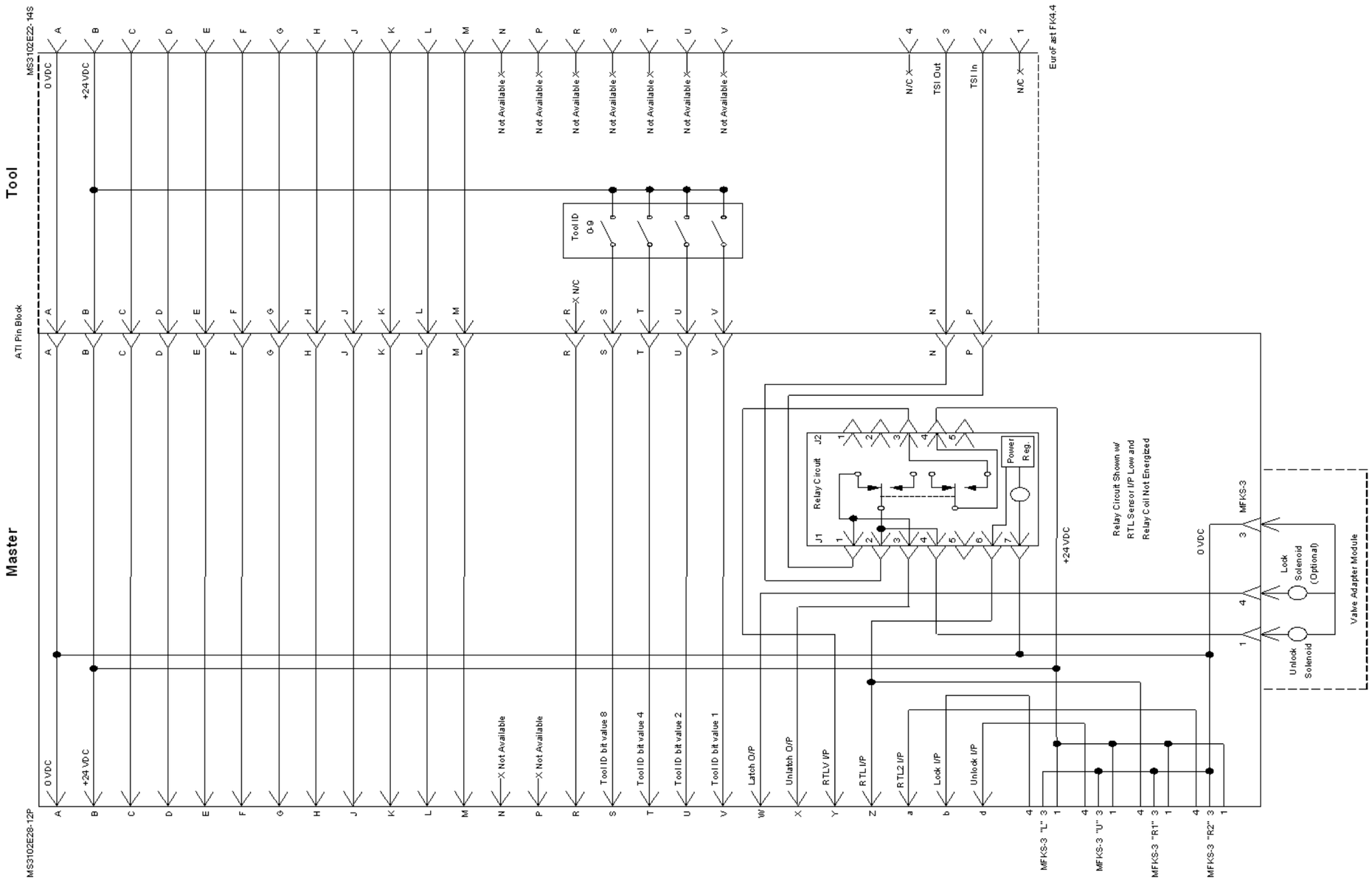

Controller Outputs		
Pin:	*Signal:*	*Description:*
A	0 VDC	Voltage Reference
B	24 VDC	Voltage Supply
X	24 VDC	Unlock Solenoid Supply
W	24 VDC	Lock Solenoid Supply (Double Solenoid)
Controller Inputs		
Pin:	*Signal:*	*Description:*
S	*Tool ID*	*Bit Value 8 (See Table)*
T	*Tool ID*	*Bit Value 4 (See Table)*
U	*Tool ID*	*Bit Value 2 (See Table)*
V	*Tool ID*	*Bit Value 1 (See Table)*
Y	RTLV	RTL Verify Input
Z	RTL #1	Ready-To-Lock Input #1
a	RTL #2	Ready-To-Lock Input #2
b	Lock	Tool Changer Lock Input
d	Unlock	Tool Changer Unlock Input

Tool ID Output

Switch 1	Pin "S"	Pin "T"	Pin "U"	Pin "V"
0	0	0	0	0
1	0	0	0	1
2	0	0	1	0
3	0	0	1	1
4	0	1	0	0
5	0	1	0	1
6	0	1	1	0
7	0	1	1	1
8	1	0	0	0
9	1	0	0	1

Notes:
1. Pin "A" on the MS connector is First-to-Mate Last-to-Break at the tool changer interface. This pin is recommended for use as 0 VDC/ ground reference.
2. The common for Tool ID is tied into the 24VDC line (Pin B). The Tool ID switches are Rated for service at 50V and 100 mA max. Refer to the Tool ID table for switch setup information.
3. Large views of connectors are 1.5:1 scale.

Tool Stand Interlock (TSI) Operation:
1. A hard-wired break in the Valve Unlatch Output is provided on the tool module via the 4-pin Eurofast connector. It is suggested that the customer integrate a single throw, double pole (NO, spring return) limit switch to work with this feature. The limit switch should be mounted to the end effector in such a way that the switch is "made" only when the tool is in the stand or storage location.
2. The RTL sensor is very important to this TSI feature and therefore should be monitored for failure. The RTLV Input is available for fault monitoring of this circuit. Please consult the product manual for operation and fault monitoring suggestions.
3. Limit switches, trip dogs and cabling are also available from ATI.

NOTES: UNLESS OTHERWISE SPECIFIED.

DO NOT SCALE DRAWING. ALL DIMENSIONS ARE IN MILLIMETERS.

3rd ANGLE PROJECTION

ATI INDUSTRIAL AUTOMATION

1031 Goodworth Drive, Apex, NC 27539, USA
Tel: +1.919.772.0115 www.ati-ia.com
Fax: +1.919.772.8259 ISO 9001 Registered Company

PROPERTY OF ATI INDUSTRIAL AUTOMATION, INC. NOT TO BE REPRODUCED IN ANY MANNER EXCEPT ON ORDER OR WITH PRIOR WRITTEN AUTHORIZATION OF ATI.

DRAWN BY: B.Digeso, 12/15/05	TITLE: VF2M VF3T Module Drawing			
CHECKED BY: R. Heavner, 12/16/05				
PROJECT # 051216-1 SHEET 3 OF 3	SCALE 1:2	SIZE B	DRAWING NUMBER 9630-20-VF2M VF3T	REVISION 07