PART NUMBERS:
(A) MASTER: 9120-020M-000-PM5-B
(B) TOOL: 9120-020T-000-PM5-B

Rev.	Description	Initiator	Date
01	INITIAL DRAWING	MJG	2/17/2026

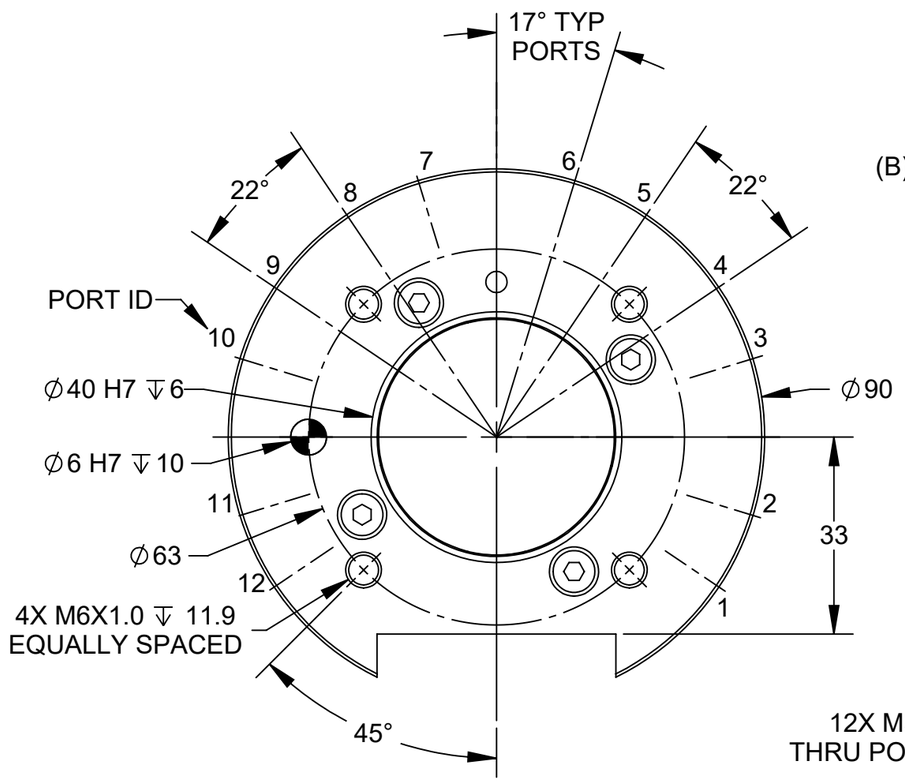

TOOL SIDE

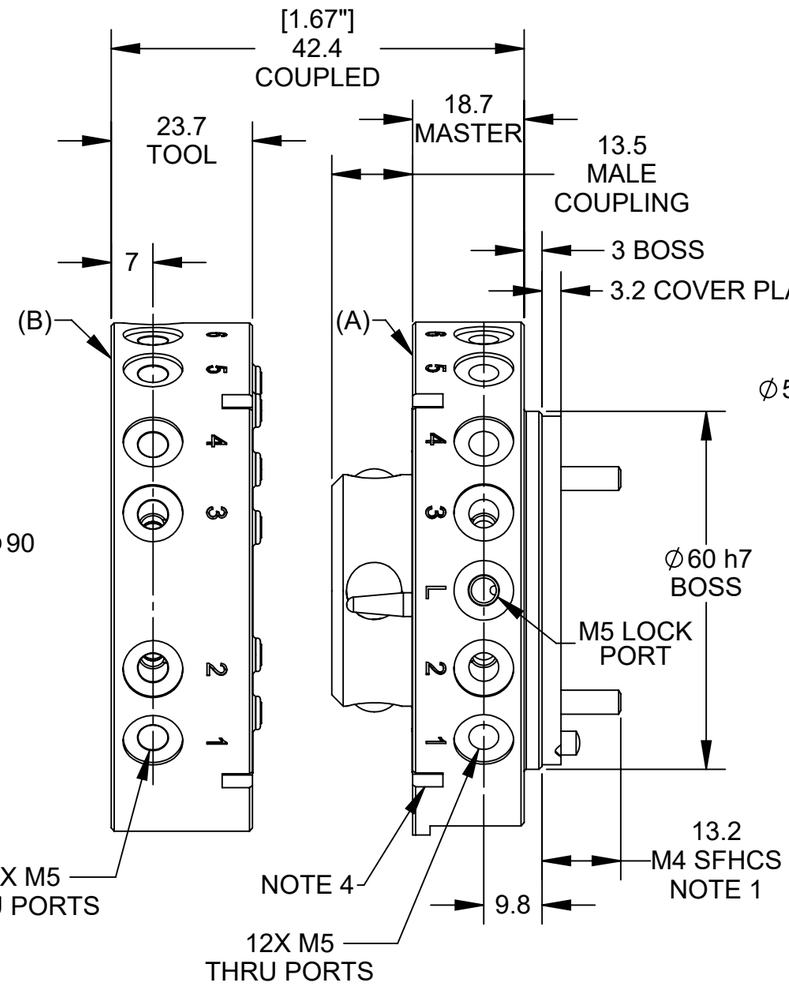

SIDE VIEW UNCOUPLED

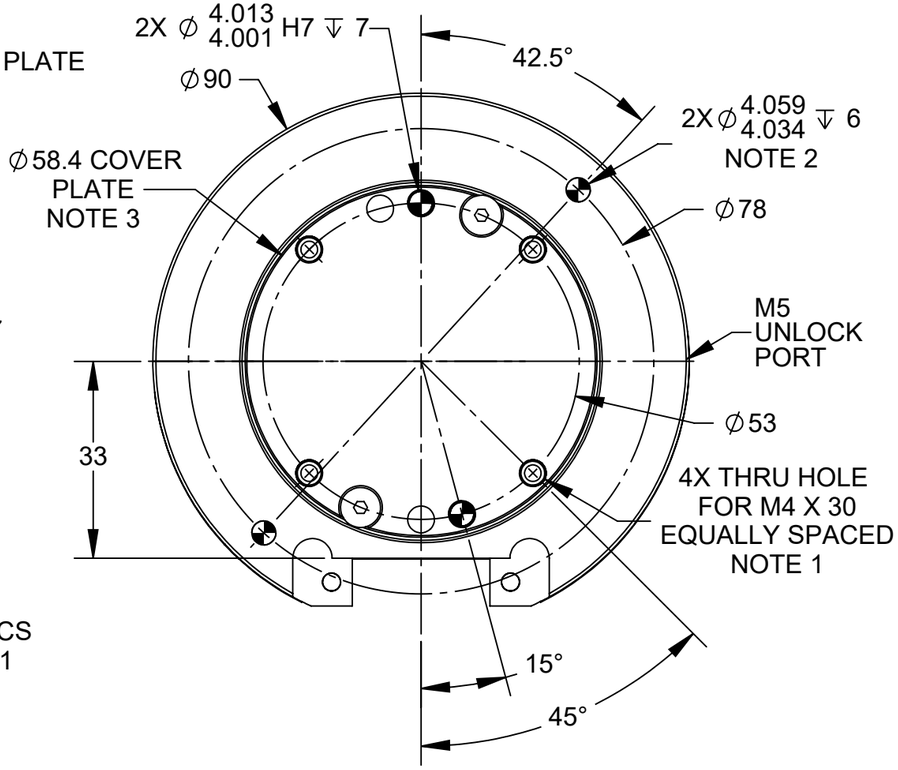

MASTER SIDE

WARNING:
DO NOT APPLY LOCK/UNLOCK AIR PRESSURE WITHOUT MASTER COVER PLATE PROPERLY ATTACHED. IF COVER PLATE IS NOT USED, MASTER SHOULD BE PROPERLY ATTACHED TO INTERFACE. FAILURE TO DO SO COULD RESULT IN DAMAGE TO COVER PLATE AND O-RING.

NOTES:
1. MASTER SIDE MOUNTING HARDWARE PROVIDED.
2. OPTIONAL CUSTOMER INTERFACE
3. COVER PLATE IS NOT NECESSARY IF ROBOT INTERFACE PLATE PROVIDES SEALING. THE RECOMMENDED INTERFACE PLATE BORE DEPTH WITHOUT A COVER PLATE IS 2.5mm, WITH A COVER PLATE IS 5.6mm.
4. ORIENTATION MARKS ARE PROVIDED TO ASSIST IN ROBOT TEACHING.
5. LOCK/UNLOCK SENSING OPTIONS ARE AVAILABLE
6. INTERFACE PLATES ARE AVAILABLE TO ADAPT THE TOOL CHANGER TO SPECIFIC MOUNTING PATTERNS
7. CONTACT ATI FOR FULL PART NUMBERS AND LIST OF OPTIONS

NOTES: UNLESS OTHERWISE SPECIFIED.

DO NOT SCALE DRAWING. ALL DIMENSIONS ARE IN MILLIMETERS.

3rd ANGLE PROJECTION

ATI INDUSTRIAL AUTOMATION
1031 Goodworth Drive, Apex, NC 27539, USA
Tel: +1.919.772.0115 *www.ati-ia.com*
Fax: +1.919.772.8259 *ISO 9001 Registered Company*

PROPERTY OF ATI INDUSTRIAL AUTOMATION, INC. NOT TO BE REPRODUCED IN ANY MANNER EXCEPT ON ORDER OR WITH PRIOR WRITTEN AUTHORIZATION OF ATI.

DRAWN BY: H. COMAN 1/13/26
CHECKED BY: M. GALA 2/17/26
PROJECT #
SHEET 1 OF 3

TITLE: QC-020 TOOL CHANGER, BLACK BODY

SCALE	SIZE	DRAWING NUMBER	REVISION
1:1	B	9630-20-020-B	01

QC-020 MASTER, BLACK BODY

9120-020M-000-PM5-B

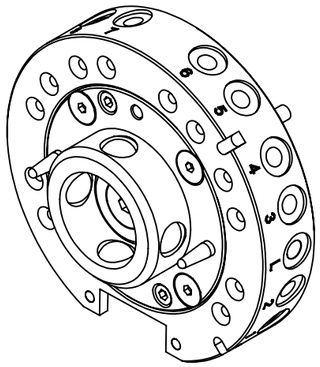

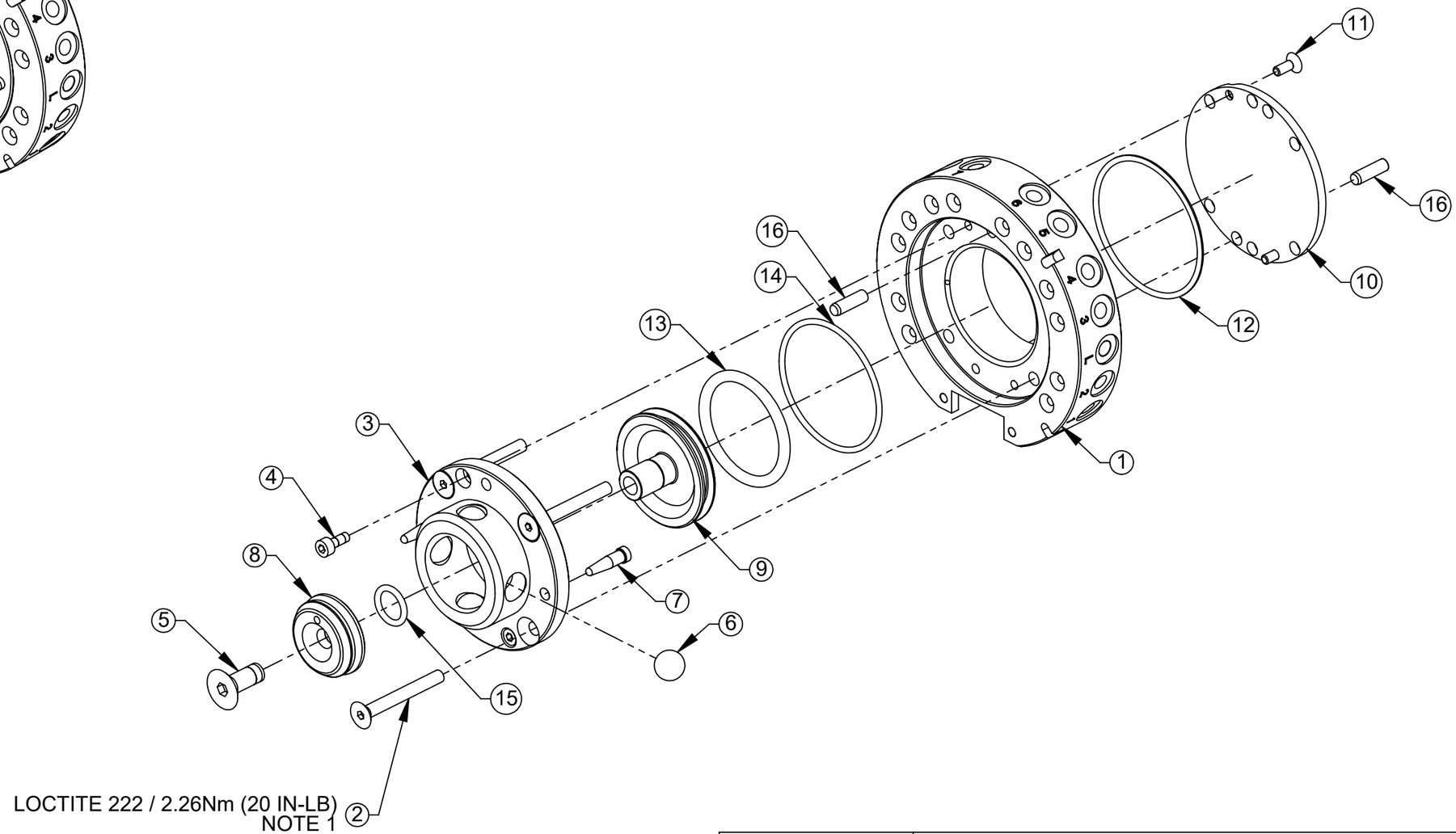

LOCTITE 222 / 2.26Nm (20 IN-LB)
NOTE 1

NOTES:
1. INSTALL WITH FASTENERS AS LABELED

NOTES: UNLESS OTHERWISE SPECIFIED.

DO NOT SCALE DRAWING. ALL DIMENSIONS ARE IN MILLIMETERS.

3rd ANGLE PROJECTION

ATI INDUSTRIAL AUTOMATION

1031 Goodworth Drive, Apex, NC 27539, USA
Tel: +1.919.772.0115 www.ati-ia.com
Fax: +1.919.772.8259 ISO 9001 Registered Company

PROPERTY OF ATI INDUSTRIAL AUTOMATION, INC. NOT TO BE REPRODUCED IN ANY MANNER EXCEPT ON ORDER OR WITH PRIOR WRITTEN AUTHORIZATION OF ATI.

DRAWN BY: H. COMAN 1/13/26

CHECKED BY: M. GALA 2/17/26

PROJECT #

SHEET 2 OF 3

TITLE: QC-020 TOOL CHANGER, BLACK BODY

SCALE	SIZE	DRAWING NUMBER	REVISION
2:3	B	9630-20-020-B	01

QC-020 TOOL, BLACK BODY

9120-020T-000-PM5-B

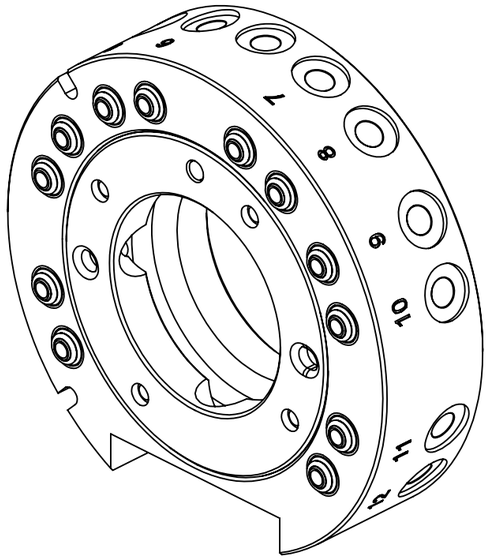

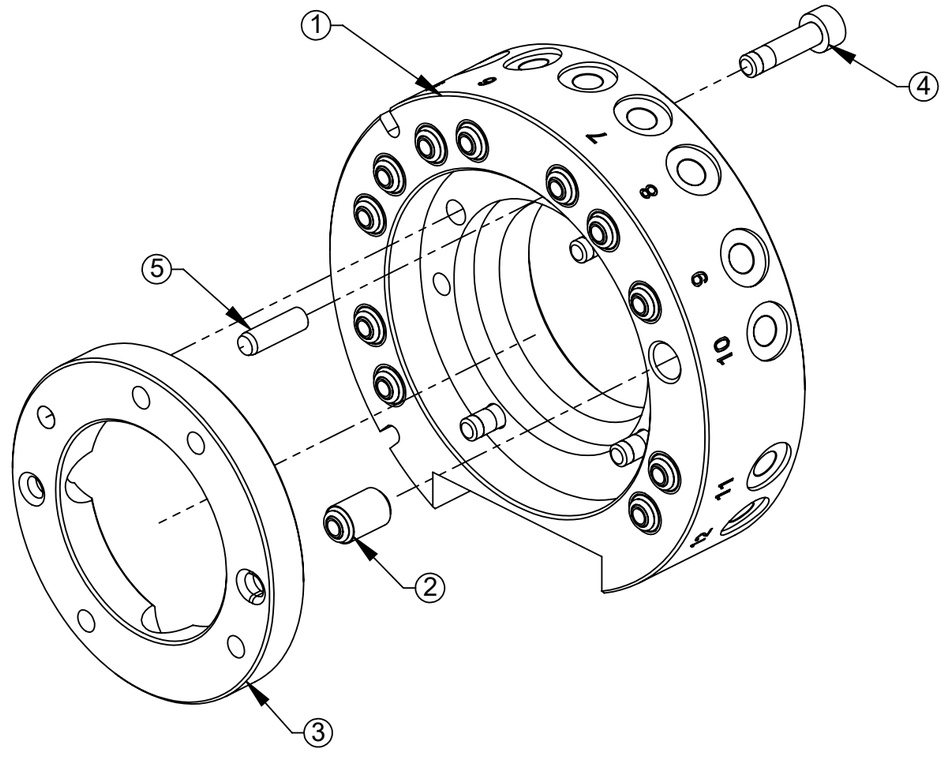

NOTES: UNLESS OTHERWISE SPECIFIED.

DO NOT SCALE DRAWING. ALL DIMENSIONS ARE IN MILLIMETERS.

3rd ANGLE PROJECTION

ATI INDUSTRIAL AUTOMATION

1031 Goodworth Drive, Apex, NC 27539, USA
Tel: +1.919.772.0115 www.ati-ia.com
Fax: +1.919.772.8259 ISO 9001 Registered Company

PROPERTY OF ATI INDUSTRIAL AUTOMATION, INC. NOT TO BE REPRODUCED IN ANY MANNER EXCEPT ON ORDER OR WITH PRIOR WRITTEN AUTHORIZATION OF ATI.

DRAWN BY: H. COMAN 1/13/26

CHECKED BY: M. GALA 2/17/26

PROJECT #

SHEET 3 OF 3

TITLE: QC-020 TOOL CHANGER, BLACK BODY

SCALE	SIZE	DRAWING NUMBER	REVISION
1:1	B	9630-20-020-B	01